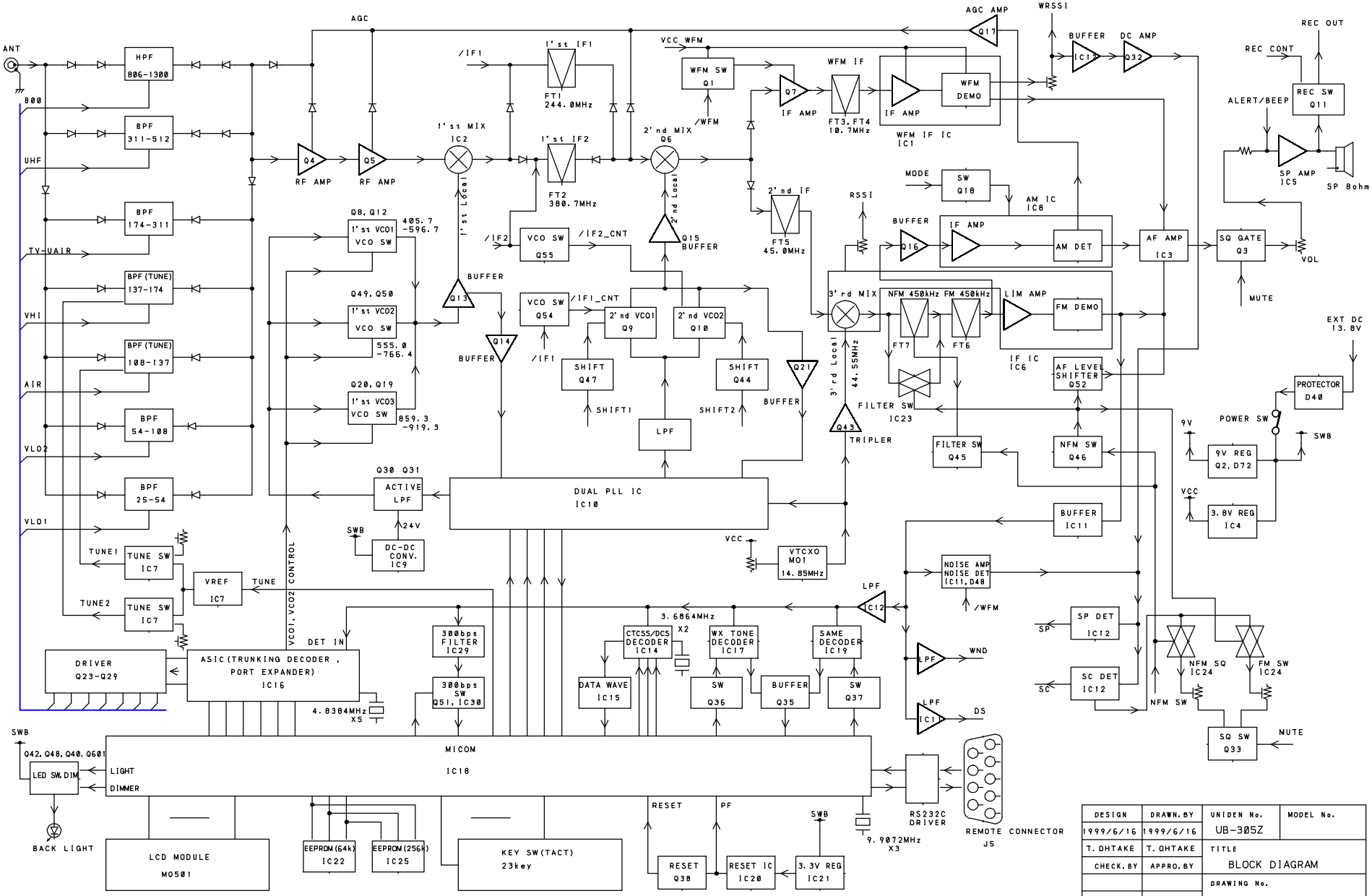

DESIGN	DRAWN. BY	UNIDEN No.	MODEL No.
1999/6/16	1999/6/16	UB-305Z	
T. OHTAKE	T. OHTAKE	TITLE	
CHECK. BY	APPRO. BY	BLOCK DIAGRAM	
		DRAWING No.	
REV. No		UNIDEN CORP.	