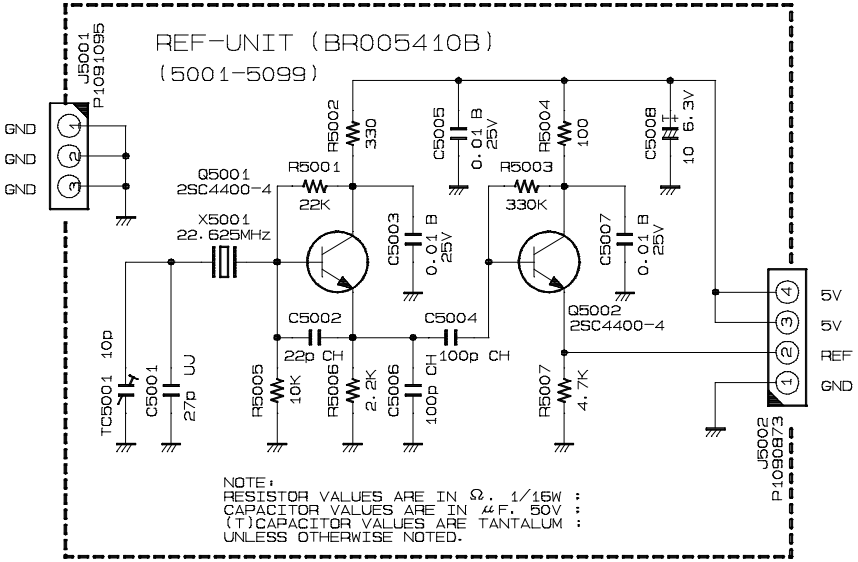

CIRCUIT DIAGRAM	MODEL
DES. B-A13770000/REF-UNIT	
REF. BP007290B.cir/001.sht	EDITION 0000
DATE 29 OCT.,1999	UPDATE 03 JUN.,2000
YAESU MUSEN CO.,LTD	

yaesu1 2000.06.05 13:57