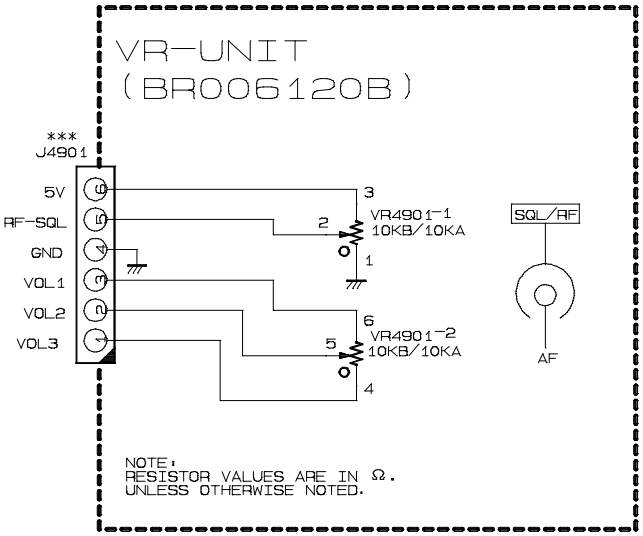

CIRCUIT DIAGRAM	MODEL
DES. B-A13770000/VR-UNIT	
REF. BP008380B.cir/001.sht	EDITION 0000
DATE 01 FEB.,2000	UPDATE 01 FEB.,2000
YAESU MUSEN CO.,LTD	

yaesu1 2000.08.09 12:53