005400C(Lot.001用回路図)

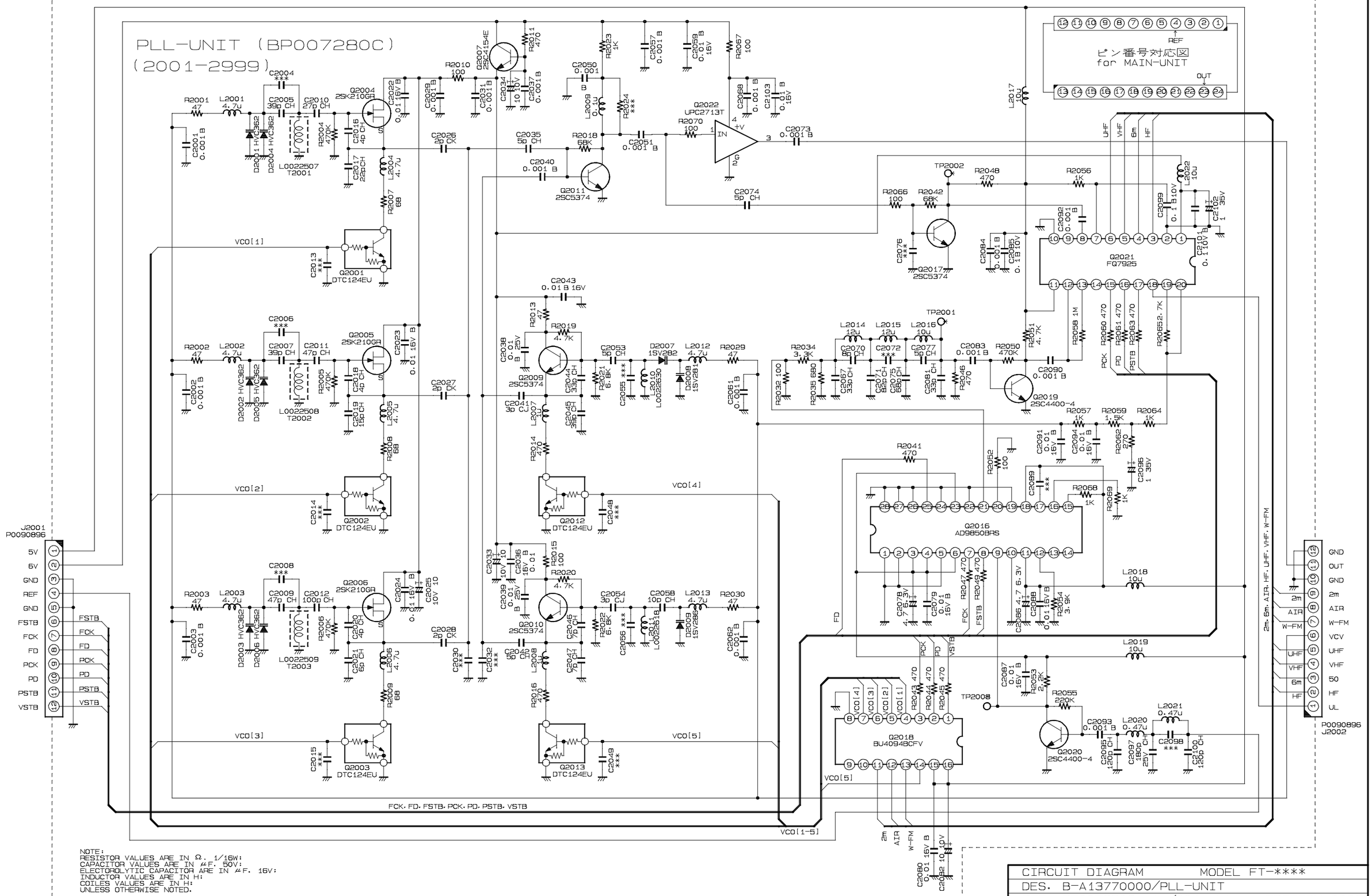

NOTE:
RESISTOR VALUES ARE IN Ω, 1/16W:
CAPACITOR VALUES ARE IN μF, 50V:
ELECTOROLYTIC CAPACITOR ARE IN μF, 16V:
INDUCTOR VALUES ARE IN H:
COILES VALUES ARE IN H:
UNLESS OTHERWISE NOTED.

CIRCUIT DIAGRAM	MODEL FT-****	
DES. B-A13770000/PLL-UNIT		
REF. BP007280C.cir/001.sht		EDITION 0000
DATE 07 Oct.. 1999	UPDATE 16 Jun . 2000	
YAESU MUSEN CO., LTD		

yaesu1 2000.07.17 15:56