Pericle Communications Company

October 31, 2003

Via Email and Fedex
Mr. Alan S. Tilles
Shulman, Rogers, Gandal, Pordy & Ecker
11921 Rockville Pike
Rockville, MD 20852-2737

Subject: OET Request for Information, Nextel Interference in Denver, CO

Dear Mr. Tilles,

During our September 15, 2003 meeting with OET at FCC headquarters, some of the staff requested further information regarding our field and lab measurements taken for the City and County of Denver. Specifically, the staff requested the following data:

1) Coordinates of the five Denver locations measured via drive tests
2) The actual intermodulation products tested in on-off testing at these locations
3) Lab test results of 3rd order and 5th order receiver intermodulation performance
4) Test plan used for these lab tests
5) Measurement of out-of-band emissions from an actual Nextel cell site

These data are provided in the attachments to this letter.

If you have any questions regarding this matter, you may contact me at (719) 548-1040 or via email at *jacobsmeyer@pericle.com*.

Sincerely,

- original signed -

Jay M. Jacobsmeyer, P.E.
President

Attachments:
1. Location Coordinates
2. Intermodulation Products Used
3. Lab Test Results of Receiver IM
4. Test Plan for Lab Tests
5. Measurement of OOBE

1910 Vindicator Drive, Suite 100 • Colorado Springs, Colorado 80919 • Phone: (719) 548-1040 • Fax: (719) 548-1211

Location Coordinates

Note: Each location was previously identified as having harmful interference and each has a Nextel and an AT&T Wireless cell site in the immediate vicinity. Coordinates are NAD 83 and furnished by Nextel (degrees-minutes-seconds).

48th & Elm:	39-47-01.6 N	105-01-24.0 W
Colorado & Colfax	39-44-29.3 N	104-56-28.1 W
1st & University	39-43-12.3 N	104-59-23.2 W
Yale & Colorado	39-40-08.5 N	104-56-22.3 W
14th & Market (downtown)	39-44-57.4 N	104-59-59.7 W

Intermodulation Products Used During On-Off Tests

Note: On-off tests are functional tests conducted to confirm loss of performance in those areas where drive test data predict inadequate carrier-to-interference ratio (*C/I*). Only certain transmitters were keyed in each sector for Nextel and AT&T Wireless so the intermodulation product under test was unique. In other words, the tests were conducted under controlled conditions to ensure a cause-and-effect relationship could be proven.

After performing a computer intermodulation study using actual Nextel and AT&T WIreless frequencies used at each location, a single 3rd order intermodulation product was selected for on-off testing.

Denver's control channel for most tests was Channel 1 (854.9875 MHz). Functional tests consisted of checking for successful control channel decoding (via the receiver LCD display) and push-to-talk tests under both "on" and "off" conditions.

AT&T channels fall in the band 869-880 MHz and 890-891.5 MHz. Most of Nextel's channels fall in the band 861-866 MHz.

Sectors are nominally oriented as follows:

Sector 1 - Due North
Sector 2 - 120°
Secor 3 - 240°

48th & Elm:

Nextel Sector 3/AT&T Sector 3

(1) 870.2100 + (1) 876.5100+ (-1) 890.2200 = 856.5000 (856.4875)

Nextel Sector 3/AT&T Sector 1

(1) 863.8125 + (1) 863.2125 + (-1) 872.0400 = 854.9850 (854.9875)

Colorado & Colfax:

Nextel Sector 2/AT&T Sector 2

(2) 862.8877 - (1)870.7800 = 854.9950 (854.9875)

Nextel Sector 1/AT&T Sector 1

(2) 864.2625 - (1) 873.5400 = 854.9875 (854.9875)

1st & University:

Nextel Sector 2/AT&T Sector 3

(2) 864.0875 - (1) 873.1800 = 854.9950 (854.9875)

Nextel Sector 3/AT&T Sector 3

(1) 870.3000 + (1) 874.8000 + (-1) 890.1000 = 855.0000 (854.9875)

Yale & Colorado:

Nextel Sector 3/AT&T Sector 2

(2) 863.0375 - (1) 871.0800 = 854.9950 (854.9875)

14th & Market:

Nextel Sector 2/AT&T Sector 2

(2) 863.2875 - (1) 871.5900 = 854.9850 (854.9875)

Nextel Sector 3/AT&T Sector 3

(1) 851.0625 + (-1) 869.4000 + (1) 873.4200 = 854.9925 (854.9875)

Nextel Sector 1/AT&T Sector 1

(1) 864.4625 + (1) 864.1625 + (-1) 873.6300 = 854.9950 (854.9875)

Receiver IM Rejection Tests				
Date:	4/17/03	Engineer:		M. D. Mieszala
Radio Model:	700P	Serial #:		9604896
Desired Freq.	867.6500	MHz	MHz	(PS 24)
Frequency 1	871.6500	MHz	MHz	
Frequency 2	869.6500	MHz		MHz
Sensitivity	-118	dBm		
Standard IM Rej.	75	dB		
Frequency 1 Amplitude	Frequency 2 Amplitude	Desired Signal Amplitude	IM Rejection, dB	Comments
-40	-50	-115	75	Below Noise Floor
-40	-45	-115	75	Below Noise Floor
-40	-40	-115	75	Below Noise Floor
-40	-35	-111	75	
-40	-30	-103	73	
-40	-25	-93	68	
-40	-20	-83	63	
-40	-15	-72	57	
-40	-10	-57	47	
-35	-50	-115	75	Below Noise Floor
-35	-45	-115	75	Below Noise Floor
-35	-40	-115	75	Below Noise Floor
-35	-35	-107	72	
-35	-30	-98	68	
-35	-25	-89	64	
-35	-20	-78	58	
-35	-15	-67	52	
-35	-10	-52	42	
-30	-50	-115	75	Below Noise Floor
-30	-45	-115	75	Below Noise Floor
-30	-40	-112	72	
-30	-35	-103	68	
-30	-30	-94	64	
-30	-25	-84	59	
-30	-20	-73	53	
-30	-15	-62	47	
-30	-10	-46	36	
-25	-50	-115	75	Below Noise Floor
-25	-45	-115	75	Below Noise Floor
-25	-40	-107	67	
-25	-35	-98	63	
-25	-30	-89	59	
-25	-25	-79	54	
-25	-20	-68	48	
-25	-15	-57	42	

-25	-10	-41	31	
-20	-50	-115	75	Below Noise Floor
-20	-45	-111	75	Below Noise Floor
-20	-40	-102	62	
-20	-35	-93	58	
-20	-30	-83	53	
-20	-25	-73	48	
-20	-20	-62	42	
-20	-15	-51	36	
-20	-10	-35	25	
-15	-50	-111	75	Below Noise Floor
-15	-45	-104	59	
-15	-40	-94	54	
-15	-35	-85	50	
-15	-30	-75	45	
-15	-25	-65	40	
-15	-20	-54	34	
-15	-15	-42	27	
-15	-10	-29	19	
-10	-50	-101	51	
-10	-45	-93	48	
-10	-40	-83	43	
-10	-35	-73	38	
-10	-30	-63	33	
-10	-25	-53	28	
-10	-20	-43	23	
-10	-15	-32	17	
-10	-10	-23	13	

Receiver IM Rejection Tests				
Date:	4/17/03	Engineer:		M. D. Mieszala
Radio Model:	700P	Serial #:		9606596
Desired Freq.	867.6500	MHz		(PS 24)
Frequency 1	871.6500	MHz		
Frequency 2	869.6500	MHz		MHz
Sensitivity	-117	dBm		
Standard IM Rej.	71	dB		
Frequency 1 Amplitude	Frequency 2 Amplitude	Desired Signal Amplitude	IM Rejection, dB	Comments
-40	-50	-114	71	Below Noise Floor
-40	-45	-114	71	Below Noise Floor
-40	-40	-111	71	Below Noise Floor
-40	-35	-106	71	
-40	-30	-95	65	
-40	-25	-91	66	
-40	-20	-85	65	
-40	-15	-76	61	
-40	-10	-58	48	
-35	-50	-114	71	Below Noise Floor
-35	-45	-111	71	Below Noise Floor
-35	-40	-105	65	
-35	-35	-100	65	
-35	-30	-94	64	
-35	-25	-87	62	
-35	-20	-84	64	
-35	-15	-70	55	
-35	-10	-53	43	
-30	-50	-114	71	Below Noise Floor
-30	-45	-109	64	
-30	-40	-101	61	
-30	-35	-93	58	
-30	-30	-89	59	
-30	-25	-85	60	
-30	-20	-79	59	
-30	-15	-65	50	
-30	-10	-48	38	

-25	-50	-113	71	Below Noise Floor
-25	-45	-109	64	
-25	-40	-98	58	
-25	-35	-89	54	
-25	-30	-82	52	
-25	-25	-80	55	
-25	-20	-75	55	
-25	-15	-60	45	
-25	-10	-42	32	
-20	-50	-114	71	Below Noise Floor
-20	-45	-108	63	
-20	-40	-100	60	
-20	-35	-91	56	
-20	-30	-83	53	
-20	-25	-77	52	
-20	-20	-74	54	
-20	-15	-53	38	
-20	-10	-37	27	
-15	-50	-113	71	Below Noise Floor
-15	-45	-107	62	
-15	-40	-98	58	
-15	-35	-89	54	
-15	-30	-79	49	
-15	-25	-68	43	
-15	-20	-57	37	
-15	-15	-45	30	
-15	-10	-31	21	
-10	-50	-103	53	
-10	-45	-95	50	
-10	-40	-85	45	
-10	-35	-76	41	
-10	-30	-66	36	
-10	-25	-56	31	
-10	-20	-45	25	
-10	-15	-35	20	
-10	-10	-26	16	

Receiver IM Rejection Tests				
Date:	4/17/03	Engineer:		M. D. Mieszala
Radio Model:	700P	Serial #:		9606596
Desired Freq.	867.6500	MHz		(PS 24)
Freq 1	869.6500	MHz		
Freq. 2 & 3	871.6500	873.6500	MHz	
Sensitivity	-118.0000	dBm		
Standard IM Rej.	75	dB	All three frequenices equal amplitude	
Freq. 1	Freq. 2&3	Desired Signal Amplitude	IM Rejection, dB	Comments
-40	-50	-115	75	
-40	-45	-115	75	
-40	-40	-111	71	
-40	-35	-100	65	
-40	-30	-89	59	
-40	-25	-82	57	
-40	-20	-77	57	
-40	-15	-45	30	
-40	-10	-26	16	
-35	-50	-115	65	
-35	-45	-115	70	
-35	-40	-111	71	
-35	-35	-100	65	
-35	-30	-89	59	
-35	-25	-82	57	
-35	-20	-76	56	
-35	-15	-45	30	
-35	-10	-26	16	
-30	-50	-115	65	
-30	-45	-115	70	
-30	-40	-111	71	
-30	-35	-100	65	
-30	-30	-89	59	
-30	-25	-82	57	
-30	-20	-73	53	
-30	-15	-44	29	
-30	-10	-26	16	

-25	-50	-115	65	
-25	-45	-115	70	
-25	-40	-111	71	
-25	-35	-99	64	
-25	-30	-88	58	
-25	-25	-82	57	
-25	-20	-67	47	
-25	-15	-43	28	
-25	-10	-25	15	
-20	-50	-115	65	
-20	-45	-115	70	
-20	-40	-111	71	
-20	-35	-98	63	
-20	-30	-85	55	
-20	-25	-75	50	
-20	-20	-60	40	
-20	-15	-42	27	
-20	-10	-26	16	
-15	-50	-115	65	
-15	-45	-115	70	
-15	-40	-109	69	
-15	-35	-96	61	
-15	-30	-81	51	
-15	-25	-68	43	
-15	-20	-55	35	
-15	-15	-42	27	
-15	-10	-28	18	
-10	-50	-113	63	
-10	-45	-112	67	
-10	-40	-109	69	
-10	-35	-97	62	
-10	-30	-83	53	
-10	-25	-71	46	
-10	-20	-59	39	
-10	-15	-46	31	
-10	-10	-31	21	

Receiver IM Rejection Tests				
Date:	4/17/03	Engineer:		M. D. Mieszala
Radio Model:	MRK	Serial #:		283142
Desired Freq.	867.6500	MHz		(PS 24)
Frequency 1	871.6500	MHz		
Frequency 2	869.6500	MHz		MHz
Sensitivity	-118	dBm		
Standard IM Rej.	75	dB		
Frequency 1 Amplitude	Frequency 2 Amplitude	Desired Signal Amplitude	IM Rejection, dB	Comments
-40	-50	-115	75	Below Noise Floor
-40	-45	-115	70	Below Noise Floor
-40	-40	-115	75	
-40	-35	-107	72	
-40	-30	-98	68	
-40	-25	-88	63	
-40	-20	-77	57	
-40	-15	-64	49	
-40	-10	-47	37	
-35	-50	-115	75	Below Noise Floor
-35	-45	-115	75	Below Noise Floor
-35	-40	-111	71	
-35	-35	-103	68	
-35	-30	-93	63	
-35	-25	-84	59	
-35	-20	-72	52	
-35	-15	-59	44	
-35	-10	-42	32	
-30	-50	-115	75	Below Noise Floor
-30	-45	-115	70	
-30	-40	-107	67	
-30	-35	-98	63	
-30	-30	-88	58	
-30	-25	-79	54	
-30	-20	-67	47	
-30	-15	-54	39	
-30	-10	-37	27	
-25	-50	-115	75	Below Noise Floor
-25	-45	-111	66	
-25	-40	-102	62	
-25	-35	-93	58	
-25	-30	-83	53	
-25	-25	-73	48	
-25	-20	-62	42	
-25	-15	-48	33	

-25	-10	-33	23	
-20	-50	-114	64	
-20	-45	-106	61	
-20	-40	-97	57	
-20	-35	-87	52	
-20	-30	-77	47	
-20	-25	-67	42	
-20	-20	-56	36	
-20	-15	-42	27	
-20	-10	-29	19	
-15	-50	-106	56	
-15	-45	-97	52	
-15	-40	-87	47	
-15	-35	-78	43	
-15	-30	-67	37	
-15	-25	-57	32	
-15	-20	-46	26	
-15	-15	-35	20	
-15	-10	-25	15	
-10	-50	-98	48	
-10	-45	-89	44	
-10	-40	-79	39	
-10	-35	-69	34	
-10	-30	-59	29	
-10	-25	-49	24	
-10	-20	-42	22	
-10	-15	-34	19	
-10	-10	-25	15	

Receiver IM Rejection Tests				
Date:	4/17/03	Engineer:		M. D. Mieszala
Radio Model:	MRK	Serial #:		311296
Desired Freq.	867.6500	MHz		(PS 24)
Frequency 1	871.6500	MHz		
Frequency 2	869.6500	MHz		MHz
Sensitivity	-118	dBm		
Standard IM Rej.	74	dB		
Frequency 1 Amplitude	Frequency 2 Amplitude	Desired Signal Amplitude	IM Rejection, dB	Comments
-40	-50	-115	74	Below Noise Floor
-40	-45	-115	70	Below Noise Floor
-40	-40	-113	73	
-40	-35	-105	70	
-40	-30	-96	66	
-40	-25	-86	61	
-40	-20	-75	55	
-40	-15	-65	50	
-40	-10	-59	49	
-35	-50	-115	74	Below Noise Floor
-35	-45	-115	70	
-35	-40	-109	69	
-35	-35	-101	66	
-35	-30	-91	61	
-35	-25	-81	56	
-35	-20	-70	50	
-35	-15	-60	45	
-35	-10	-54	44	
-30	-50	-115	74	Below Noise Floor
-30	-45	-113	68	
-30	-40	-105	65	
-30	-35	-96	61	
-30	-30	-86	56	
-30	-25	-76	51	
-30	-20	-66	46	
-30	-15	-55	40	
-30	-10	-49	39	
-25	-50	-115	65	
-25	-45	-110	65	
-25	-40	-101	61	
-25	-35	-91	56	
-25	-30	-81	51	
-25	-25	-71	46	
-25	-20	-61	41	
-25	-15	-51	36	

-25	-10	-44	34	
-20	-50	-113	63	
-20	-45	-105	60	
-20	-40	-95	55	
-20	-35	-85	50	
-20	-30	-75	45	
-20	-25	-65	40	
-20	-20	-55	35	
-20	-15	-46	31	
-20	-10	-40	30	
-15	-50	-109	59	
-15	-45	-101	56	
-15	-40	-91	51	
-15	-35	-81	46	
-15	-30	-71	41	
-15	-25	-61	36	
-15	-20	-51	31	
-15	-15	-43	28	
-15	-10	-35	25	
-10	-50	-107	57	
-10	-45	-100	55	
-10	-40	-90	50	
-10	-35	-80	45	
-10	-30	-70	40	
-10	-25	-60	35	
-10	-20	-49	29	
-10	-15	-38	23	
-10	-10	-28	18	

Receiver IM Rejection Tests				
Date:	4/17/03	Engineer:		M. D. Mieszala
Radio Model:	MRK	Serial #:		278870
Desired Freq.	867.6500	MHz		(PS 24)
Frequency 1	871.6500	MHz		
Frequency 2	869.6500	MHz		MHz
Sensitivity	-117	dBm		
Standard IM Rej.	71	dB		
Frequency 1 Amplitude	Frequency 2 Amplitude	Desired Signal Amplitude	IM Rejection, dB	Comments
-40	-50	-114	71	Below Noise Floor
-40	-45	-116	71	
-40	-40	-109	69	
-40	-35	-101	66	
-40	-30	-91	61	
-40	-25	-82	57	
-40	-20	-72	52	
-40	-15	-62	47	
-40	-10	-53	43	
-35	-50	-114	71	Below Noise Floor
-35	-45	-113	68	
-35	-40	-106	66	
-35	-35	-97	62	
-35	-30	-86	56	
-35	-25	-77	52	
-35	-20	-67	47	
-35	-15	-58	43	
-35	-10	-49	39	
-30	-50	-114	64	
-30	-45	-110	65	
-30	-40	-101	61	
-30	-35	-92	57	
-30	-30	-82	52	
-30	-25	-72	47	
-30	-20	-62	42	
-30	-15	-53	38	
-30	-10	-44	34	
-25	-50	-113	63	
-25	-45	-106	61	
-25	-40	-97	57	
-25	-35	-87	52	
-25	-30	-77	47	
-25	-25	-67	42	
-25	-20	-58	38	
-25	-15	-48	33	

-25	-10	-40	30	
-20	-50	-110	60	
-20	-45	-102	57	
-20	-40	-92	52	
-20	-35	-83	48	
-20	-30	-73	43	
-20	-25	-63	38	
-20	-20	-53	33	
-20	-15	-44	29	
-20	-10	-36	26	
-15	-50	-109	59	
-15	-45	-98	53	
-15	-40	-88	48	
-15	-35	-78	43	
-15	-30	-68	38	
-15	-25	-59	34	
-15	-20	-49	29	
-15	-15	-40	25	
-15	-10	-34	24	
-10	-50	-109	59	
-10	-45	-102	57	
-10	-40	-93	53	
-10	-35	-83	48	
-10	-30	-73	43	
-10	-25	-63	38	
-10	-20	-54	34	
-10	-15	-36	21	
-10	-10	-27	17	

Receiver IM Rejection Tests				
Date:	4/17/03	Engineer:		M. D. Mieszala
Radio Model:	M-RK	Serial #:		M-RK SN278870
Desired Freq.	867.6500	MHz		(PS 24)
Freq 1	869.6500	MHz		
Freq 2 & 3	871.6500	873.6500	MHz	
Sensitivity	-118.0000	dBm		
Standard IM Rej.	75	dB	All three frequencies equal amplitude	
Frequency 1	Freq. 2&3	Desired Signal Amplitude	IM Rejection, dB	Comments
-40	-50	-115	75	IM below noise floor
-40	-45	-115	75	IM below noise floor
-40	-40	-109	69	
-40	-35	-96	61	
-40	-30	-81	51	
-40	-25	-66	41	
-40	-20	-52	32	
-40	-15	-39	24	
-40	-10	-26	16	
-35	-50	-115	75	IM below noise floor
-35	-45	-115	75	IM below noise floor
-35	-40	-109	69	
-35	-35	-96	61	
-35	-30	-82	52	
-35	-25	-67	42	
-35	-20	-53	33	
-35	-15	-40	25	
-35	-10	-26	16	
-30	-50	-115	75	IM below noise floor
-30	-45	-114	69	
-30	-40	-109	69	
-30	-35	-96	61	
-30	-30	-82	52	
-30	-25	-67	42	
-30	-20	-53	33	
-30	-15	-40	25	

-30	-10	-26	16	
-25	-50	-115	75	IM below noise floor
-25	-45	-115	75	IM below noise floor
-25	-40	-109	69	
-25	-35	-97	62	
-25	-30	-82	52	
-25	-25	-68	43	
-25	-20	-53	33	
-25	-15	-41	26	
-25	-10	-26	16	
-20	-50	-115	75	IM below noise floor
-20	-45	-115	75	IM below noise floor
-20	-40	-110	70	
-20	-35	-97	62	
-20	-30	-83	53	
-20	-25	-68	43	
-20	-20	-54	34	
-20	-15	-44	29	
-20	-10	-27	17	
-15	-50	-115	75	IM below noise floor
-15	-45	-115	75	IM below noise floor
-15	-40	-112	72	
-15	-35	-102	67	
-15	-30	-88	58	
-15	-25	-74	49	
-15	-20	-67	47	
-15	-15	-48	33	
-15	-10	-28	18	
-10	-50	-113	63	
-10	-45	-112	67	
-10	-40	-109	69	
-10	-35	-99	64	
-10	-30	-85	55	
-10	-25	-70	45	
-10	-20	-56	36	
-10	-15	-43	28	
-10	-10	-30	20	

Receiver IM Rejection Tests				
Date:	4/17/03	Engineer:		M. D. Mieszala
Radio Model:	MPA	Serial #:		1297769
Desired Freq.	867.6500	MHz		(PS 24)
Frequency 1	871.6500	MHz		
Frequency 2	869.6500	MHz		MHz
Sensitivity	-119	dBm		
Standard IM Rej.	77	dB		
Frequency 1 Amplitude	Frequency 2 Amplitude	Desired Signal Amplitude	IM Rejection, dB	Comments
-40	-50	-116	77	Below Noise Floor
-40	-45	-116	77	Below Noise Floor
-40	-40	-116	76	
-40	-35	-111	76	
-40	-30	-102	72	
-40	-25	-93	68	
-40	-20	-83	63	
-40	-15	-76	61	
-40	-10	-69	59	
-35	-50	-116	77	Below Noise Floor
-35	-45	-116	77	Below Noise Floor
-35	-40	-114	74	
-35	-35	-107	72	
-35	-30	-98	68	
-35	-25	-88	63	
-35	-20	-79	59	
-35	-15	-71	56	
-35	-10	-64	54	
-30	-50	-116	77	Below Noise Floor
-30	-45	-116	71	
-30	-40	-111	71	
-30	-35	-102	67	
-30	-30	-93	63	
-30	-25	-83	58	
-30	-20	-74	54	
-30	-15	-66	51	
-30	-10	-59	49	
-25	-50	-116	77	Below Noise Floor
-25	-45	-115	70	
-25	-40	-107	67	
-25	-35	-98	63	
-25	-30	-88	58	
-25	-25	-79	54	
-25	-20	-69	49	
-25	-15	-61	46	

-25	-10	-54	44	
-20	-50	-116	77	Below Noise Floor
-20	-45	-111	66	
-20	-40	-104	64	
-20	-35	-94	59	
-20	-30	-84	54	
-20	-25	-75	50	
-20	-20	-65	45	
-20	-15	-56	41	
-20	-10	-49	39	
-15	-50	-116	77	Below Noise Floor
-15	-45	-110	65	
-15	-40	-101	61	
-15	-35	-92	57	
-15	-30	-82	52	
-15	-25	-72	47	
-15	-20	-62	42	
-15	-15	-52	37	
-15	-10	-43	33	
-10	-50	-113	63	
-10	-45	-106	61	
-10	-40	-97	57	
-10	-35	-88	53	
-10	-30	-78	48	
-10	-25	-68	43	
-10	-20	-57	37	
-10	-15	-45	30	
-10	-10	-33	23	

Receiver IM Rejection Tests				
Date:	4/17/03	Engineer:		M. D. Mieszala
Radio Model:	MPA	Serial #:		8149440
Desired Freq.	867.6500	MHz		(PS 24)
Frequency 1	871.6500	MHz		
Frequency 2	869.6500	MHz		MHz
Sensitivity	-116	dBm		
Standard IM Rej.	80	dB		
Frequency 1 Amplitude	Frequency 2 Amplitude	Desired Signal Amplitude	IM Rejection, dB	Comments
-40	-50	-113	80	Below Noise Floor
-40	-45	-113	80	Below Noise Floor
-40	-40	-113	80	Below Noise Floor
-40	-35	-113	78	
-40	-30	-110	80	
-40	-25	-101	76	
-40	-20	-92	72	
-40	-15	-82	67	
-40	-10	-74	64	
-35	-50	-113	80	Below Noise Floor
-35	-45	-113	80	Below Noise Floor
-35	-40	-113	80	Below Noise Floor
-35	-35	-113	78	
-35	-30	-106	76	
-35	-25	-97	72	
-35	-20	-87	67	
-35	-15	-78	63	
-35	-10	-69	59	
-30	-50	-113	80	Below Noise Floor
-30	-45	-113	80	Below Noise Floor
-30	-40	-113	80	Below Noise Floor
-30	-35	-111	76	
-30	-30	-102	72	
-30	-25	-93	68	
-30	-20	-83	63	
-30	-15	-73	58	
-30	-10	-64	54	
-25	-50	-113	80	Below Noise Floor
-25	-45	-113	80	Below Noise Floor
-25	-40	-113	73	
-25	-35	-106	71	
-25	-30	-98	68	
-25	-25	-88	63	
-25	-20	-78	58	
-25	-15	-68	53	

-25	-10	-60	50	
-20	-50	-113	80	Below Noise Floor
-20	-45	-113	68	Below Noise Floor
-20	-40	-110	70	
-20	-35	-102	67	
-20	-30	-93	63	
-20	-25	-83	58	
-20	-20	-73	53	
-20	-15	-63	48	
-20	-10	-55	45	
-15	-50	-113	80	Below Noise Floor
-15	-45	-113	68	
-15	-40	-107	67	
-15	-35	-98	63	
-15	-30	-88	58	
-15	-25	-79	54	
-15	-20	-68	48	
-15	-15	-60	45	
-15	-10	-50	40	
-10	-50	-113	63	
-10	-45	-110	65	
-10	-40	-103	63	
-10	-35	-94	59	
-10	-30	-84	54	
-10	-25	-74	49	
-10	-20	-63	43	
-10	-15	-54	39	
-10	-10	-44	34	

Receiver IM Rejection Tests				
Date:	4/20/03	Engineer:		M. D. Mieszala
Radio Model:	MPA	Serial #:		1219264
Desired Freq.	867.6500	MHz		(PS 24)
Frequency 1	871.6500	MHz		
Frequency 2	869.6500	MHz		MHz
Sensitivity	-119.0000	dBm		
Standard IM Rej.	79	dB		
Frequency 1 Amplitude	Frequency 2 Amplitude	Desired Signal Amplitude	IM Rejection, dB	Comments
-40	-50	-116	79	Below Noise Floor
-40	-45	-116	79	Below Noise Floor
-40	-40	-116	76	
-40	-35	-114	79	
-40	-30	-107	77	
-40	-25	-98	73	
-40	-20	-88	68	
-40	-15	-79	64	
-40	-10	-69	59	
-35	-50	-116	79	Below Noise Floor
-35	-45	-116	79	Below Noise Floor
-35	-40	-116	76	
-35	-35	-111	76	
-35	-30	-103	73	
-35	-25	-93	68	
-35	-20	-83	63	
-35	-15	-74	59	
-35	-10	-64	54	
-30	-50	-116	66	Below Noise Floor
-30	-45	-116	71	Below Noise Floor
-30	-40	-114	74	
-30	-35	-107	72	
-30	-30	-98	68	
-30	-25	-88	63	
-30	-20	-78	58	
-30	-15	-69	54	
-30	-10	-59	49	
-25	-50	-116	79	Below Noise Floor
-25	-45	-116	71	
-25	-40	-111	71	
-25	-35	-103	68	
-25	-30	-93	63	
-25	-25	-84	59	
-25	-20	-73	53	
-25	-15	-64	49	

-25	-10	-54	44	
-20	-50	-116	79	Below Noise Floor
-20	-45	-116	71	
-20	-40	-107	67	
-20	-35	-98	63	
-20	-30	-89	59	
-20	-25	-79	54	
-20	-20	-69	49	
-20	-15	-59	44	
-20	-10	-49	39	
-15	-50	-116	66	
-15	-45	-111	66	
-15	-40	-103	63	
-15	-35	-94	59	
-15	-30	-84	54	
-15	-25	-74	49	
-15	-20	-64	44	
-15	-15	-54	39	
-15	-10	-42	32	
-10	-50	-113	63	
-10	-45	-107	62	
-10	-40	-98	58	
-10	-35	-88	53	
-10	-30	-78	48	
-10	-25	-68	43	
-10	-20	-57	37	
-10	-15	-46	31	
-10	-10	-32	22	

5th Order Receiver IM Rejection Tests				
Date:	4/17/03	Engineer:		M. D. Mieszala
Radio Model:	See Below	Serial #:		See Below
Desired Freq.	867.6500	MHz		(PS 24)
Freq. 1	871.6500	MHz		
Freq. 2	873.6500	MHz		
Sensitivity	Varies	dBm		
Standard IM Rej.	Varies	dB		
Frequency 1 Amplitude	Frequency 2 Amplitude	Desired Signal Amplitude	IM Rejection, dB	Comments
				M-RK SN278870
-50	-50	-116	87	IM Product is below noise floor
-45	-45	-116	87	Standard IM rejection
-40	-40	-116	87	
-35	-35	-116	87	
-30	-30	-116	86	
-25	-25	-101	76	
-20	-20	-78	58	
-15	-15	-58	43	
-10	-10	-42	32	
				M-RK S/N311296
-50	-50	-117	87	
-45	-45	-117	87	
-40	-40	-117	87	
-35	-35	-117	87	
-30	-30	-117	87	
-25	-25	-108	83	
-20	-20	-91	71	
-15	-15	-61	46	
-10	-10	-49	39	
				M-RK S/N 283148
-50	-50	-117	88	
-45	-45	-117	88	
-40	-40	-117	88	
-35	-35	-117	88	
-30	-30	-117	88	
-25	-25	-113	88	
-20	-20	-86	66	
-15	-15	-58	43	
-10	-10	-38	28	
				700P- S/N 9606596
-50	-50	-117	82	** Odd Performance **
-45	-45	-117	82	
-40	-40	-117	82	
-35	-35	-117	82	

-30	-30	-108	78	
-25	-25	-96	71	
-20	-20	-81	61	
-15	-15	-60	45	
-10	-10	-60	50	
				700P- S/N 9684896
-50	-50	-117	89	
-45	-45	-117	89	
-40	-40	-117	89	
-35	-35	-117	89	
-30	-30	-117	87	
-25	-25	-113	88	
-20	-20	-86	66	
-15	-15	-60	45	
-10	-10	-52	42	
				M-PA S/N 1219264
-50	-50	-117	94	
-45	-45	-117	94	
-40	-40	-117	94	
-35	-35	-117	94	
-30	-30	-117	94	
-25	-25	-117	94	
-20	-20	-106	86	
-15	-15	-82	67	
-10	-10	-50	40	
				M-PA 1237763
-50	-50	-117	91	
-45	-45	-117	91	
-40	-40	-117	91	
-35	-35	-117	91	
-30	-30	-117	91	
-25	-25	-116	91	
-20	-20	-97	77	
-15	-15	-76	61	
-10	-10	-47	37	
				M-PA 8149440
-50	-50	-117	-96	Older Radio - Possible Loose Antenna Con.
-45	-45	-117	-96	*** Bad ***
-40	-40	-117	-96	
-35	-35	-117	-96	
-30	-30	-117	-96	
-25	-25	-117	-96	
-20	-20	-117	-96	
-15	-15	-104	89	
-10	-10	-81	71	

Radio Frequency Test Plan

Receiver Selectivity and Receiver Intermodulation Rejection

Pericle Communications Company

April 15, 2003

1.0 Introduction

The purpose of this test is to determine the vulnerability of several models of MA/COM mobile and portable radios to intermodulation (IM) interference from Nextel iDEN & AT&T cellular radio signals. Two-tone and three-tone 3rd order IM and two-tone 5th order IM will be tested. The test procedure generally follows EIA-603B except that much stronger interfering signals are introduced (-40 to -10 dBm) and the two interfering signals are separated by 1 MHz rather than 25 kHz.

2.0 Test Plan

2.1 Definitions. The *channel selectivity* is the ratio of the level of an unwanted input signal that reduces the signal-to-noise ratio (SINAD) produced by a signal 3 dB in excess of the reference sensitivity to the reference sensitivity.

The *intermodulation immunity* is the ability of the receiver to prevent two or three unwanted input signals with a specific frequency relationship to the wanted signal frequency from causing an unwanted response at the output of the receiver due to intermodulation. It is expressed as the ratio, in dB, of the level of one of the equal-level unwanted signals that reduces the signal-to-noise ratio (SINAD) produced by the wanted signal 3 dB in excess of the reference sensitivity to the reference sensitivity. The intermodulation immunity is also the *standard* IM rejection.

The *standard input signal* is a frequency modulated signal with a 1,000 Hz modulating tone at a frequency deviation of 60% of maximum (3 kHz for 5 kHz max, 2.4 kHz for 4 kHz max) and an amplitude 60 dB above the reference sensitivity.

The *reference sensitivity* is the 12 dB SINAD sensitivity of the Ericsson radio under test as measured by the HP 8920 service monitor.

2.2 Method of Measurement.

(a) Setup. Connect the equipment as illustrated in Figure 1. Note that the isolators and bandpass filters are designed to prevent the generation of intermodulation products inside the test instruments. Verify that instrument-generated IM products are low enough to not affect

the results by measuring the output of the power combiner with a spectrum analyzer with a cavity bandpass filter at the front end. Ensure the analyzer is not creating IM products by checking for linearity with an attenuator. All cables and connectors should be low passive IM type (e.g., no nickel plated connectors).

(b) Cable and Power Combiner Attenuation. Measure the attenuation of the cables and power combiner from the RF output of the HP 8920A to the antenna input of the radio under test. Record this attenuation value, *A*, in dB.

(c) Reference Sensitivity. Temporarily remove the interfering signals from the inputs to the power combiner and connect a 50 Ohm termination to each unused inputs. Apply the standard input signal at a frequency of 867.6500 MHz and reduce its level to obtain the reference sensitivity. The reference sensitivity is the output RF level at the HP 8920A minus the attenuation recorded in (b). I.e., Reference Sensitivity = RF Output - *A*. Re-connect the interfering signals.

(d) Increase the level of the desired input signal by 3 dB.

(e) Standard IM Rejection. Terminate the "Nextel" input to the power combiner. Increase the AT&T interferers with equal levels until the SINAD returns to 12 dB. Record the *intermodulation immunity* or standard IM rejection for two tone IM. Note that this value will differ from the manufacturer's two-tone IM specification for the radio because (1) normal variations between radios and (2) the frequency separation is greater than 25 kHz.

(f) Inject a simulated interferer at 869.6500 MHz at an amplitude of -40 dBm at the input to the MA/COM receiver. Note that the amplitude will be increased through each iteration of the test in 5 dB increments from -40 dBm to -10 dBm.

(g) Inject a second simulated interferers at 871.6500 MHz at -50 dBm each, measured at the input to the MA/COM receiver. The 2A-B third-order IM product will fall on 867.6500 MHz. For each amplitude value of 869.6500 MHz, this second interferer will be incremented from -50 dBm to -10 dBm in 5 dB steps.

(h) IM Rejection. Increase the desired signal level until the SINAD returns to 12 dB. Record the *IM rejection* as the difference in dB between the interfering signal in dBm and the desired signal level in dBm.

(i) Increase the second interfering signal levels by 5 dB and repeat step (h) for signals from -45 dBm to -10 dBm.

(j) Increase the first interfering signal level by 5 dB and repeat steps (h) and (i). Repeat for signal levels from -50 dBm to -10 dBm.

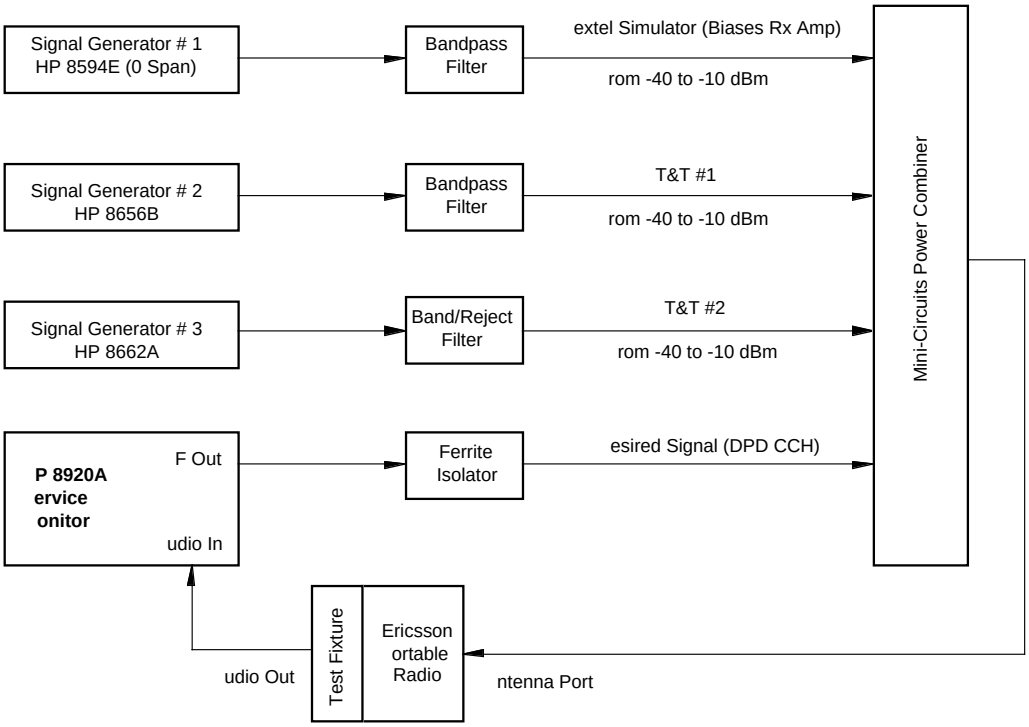

Figure 1 - Test Equipment Configuration

Out-of-Band Emissions (OOBE)

Measurements of Nextel OOBE were taken on February 13, 2001 on one sector of the Concourse A Nextel cell site at Denver International Airport. These measurements were taken under controlled conditions using a directional coupler inserted in the main antenna line. The directional coupler has directivity of at least 30 dB. Input levels to the spectrum analyzer were limited to minimize the generation of instrument-created IM products. Also, the test engineer verified that the instrument's displayed noise floor was at least 10 dB below the displayed trace to ensure the trace does, in fact, represent OOBE from the iDEN carrier(s) and not thermal or phase noise in the instrument.

Measurements were taken on a active sector with three active iDEN carriers. It was not feasible to isolate the OOBE from a single carrier, so the results are the cumulative OOBE from three modulated iDEN carriers.

The results are shown in Figure 1 below in the form of the ratio (in dB) of OOBE power to the power in one carrier. Note that OOBE are cumulative from the three active carriers on this sector and each discrete point on the graph is derived from a power measurement over the respective 25 kHz channel.

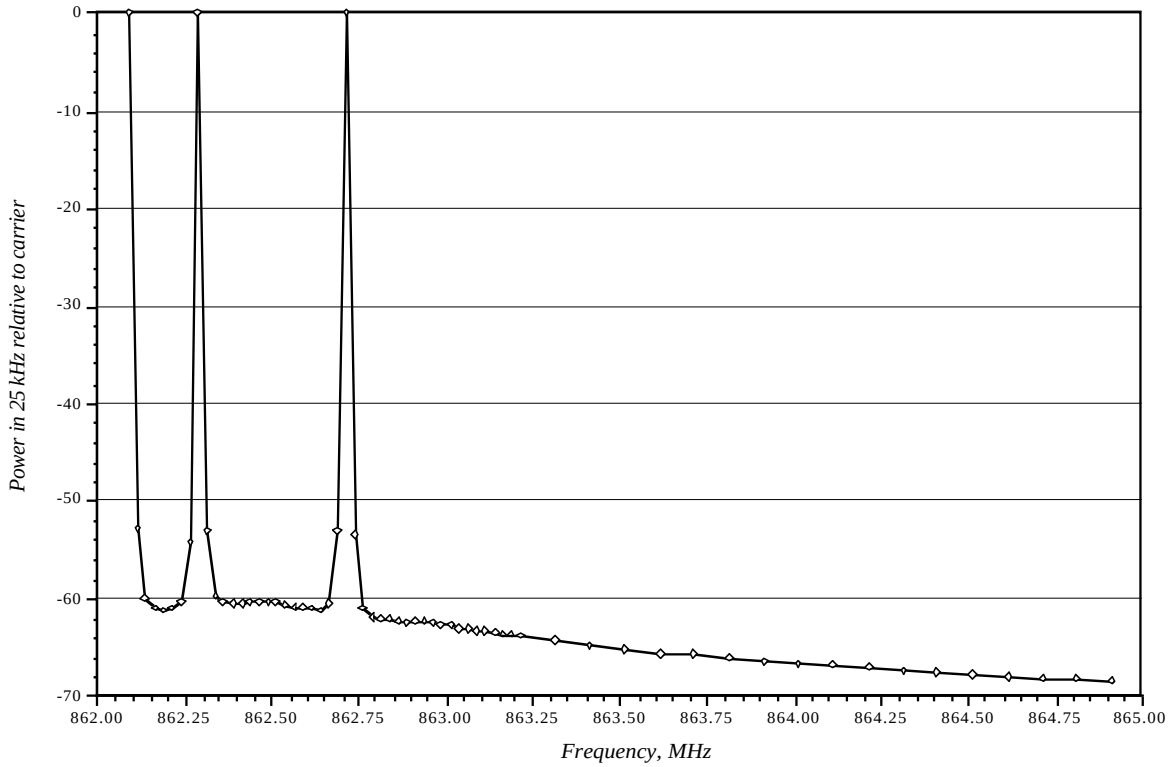

Figure 1 - Power in 25 kHz Bandwidth Relative to Power in One Occupied iDEN Channel (Measurements Collected Using Channel Power Measurement Routine on Agilent E4401B Spectrum Analyzer)

Some rules of thumb that can be derived from Figure 1:

- OOBE from single carriers are -53 dBc for adjacent channels (25 kHz)
- OOBE are -60 dBc for close in, non adjacent channels
- Several MHz from the carrier, OOBE are still no better than -68 dBc
- OOBE are cumulative, so sectors with many iDEN channels will have higher OOBE

Figure 2 is a spectrum analyzer trace of a typical iDEN signal.

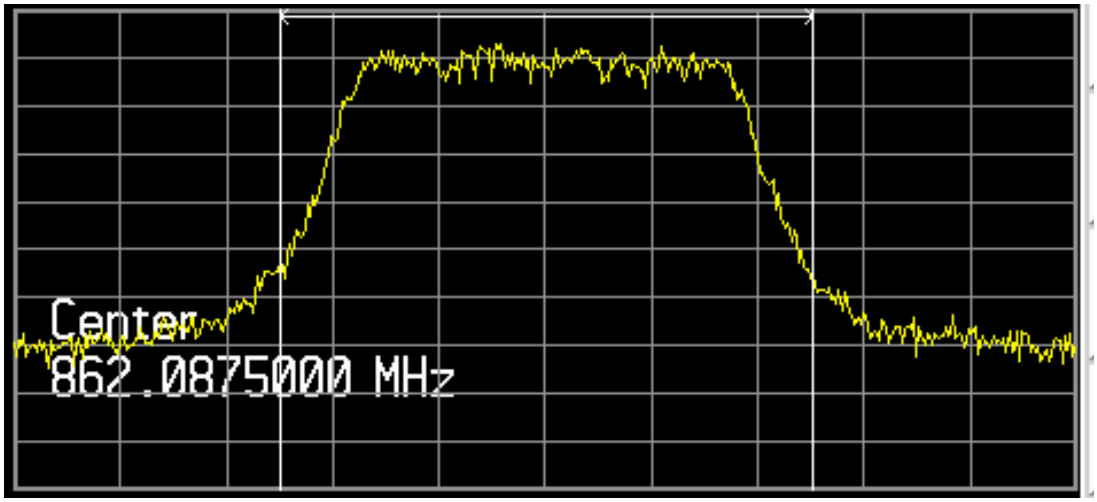

Figure 2 - Typical Spectrum Analyzer Trace of iDEN Signal
(From E4401B, 10 dB per vertical division, 5 kHz per horizontal division, Resolution Bandwidth = 1 kHz, Video Bandwidth = 10 kHz)