Presentation of the
Short Range Automotive Radar Frequency Allocation Group:

24 GHz Short Range Radar for Automotive Applications

before the

National Telecommunications and Information Administration
Office of Spectrum Management

February 1, 2002

Audi, BMW, DaimlerChrysler, Fiat, Ford, Jaguar, Opel / GM, Porsche, PSA Peugeot Citroën, Renault, Saab, Seat, Volkswagen, Volvo, A.D.C., Bosch, Delphi, InnoSent, Megamos, Siemens VDO, TRW, Tyco Electronics, Valeo, Visteon.

OUTLINE

- **Traffic safety benefits**
- **Compatibility of SRR with Radio Astronomy Services**
- **Compatibility of SRR with Earth Exploration Satellite Services**
- **Relocation of SRR center frequency is not feasible**

Traffic scenarios

Accidents and pile-ups on freeways

Rear-end collisions in dense city traffic

Parking lot collisions

Need for accident prevention

"A death from vehicle crashes every 13 min. (injury every 14 sec.)
41,200 motor vehicle deaths per year."
(National Safety Council, *Injury Facts*, 1999)

Statement of U.S.A. National Transportation Safety Board Public Meeting - 1 May 2001:

"Develop and implement …. a program to inform the public ….

on the benefits, use, and effectiveness of C.W.S. and A.C.C."

(C.W.S. = collision warning system; A.C.C. = adaptive cruise control)

Causes of Rear-End Crashes

➡ **24 GHz Automotive Radar could address 88% of all Causes of Rear-End Crashes**

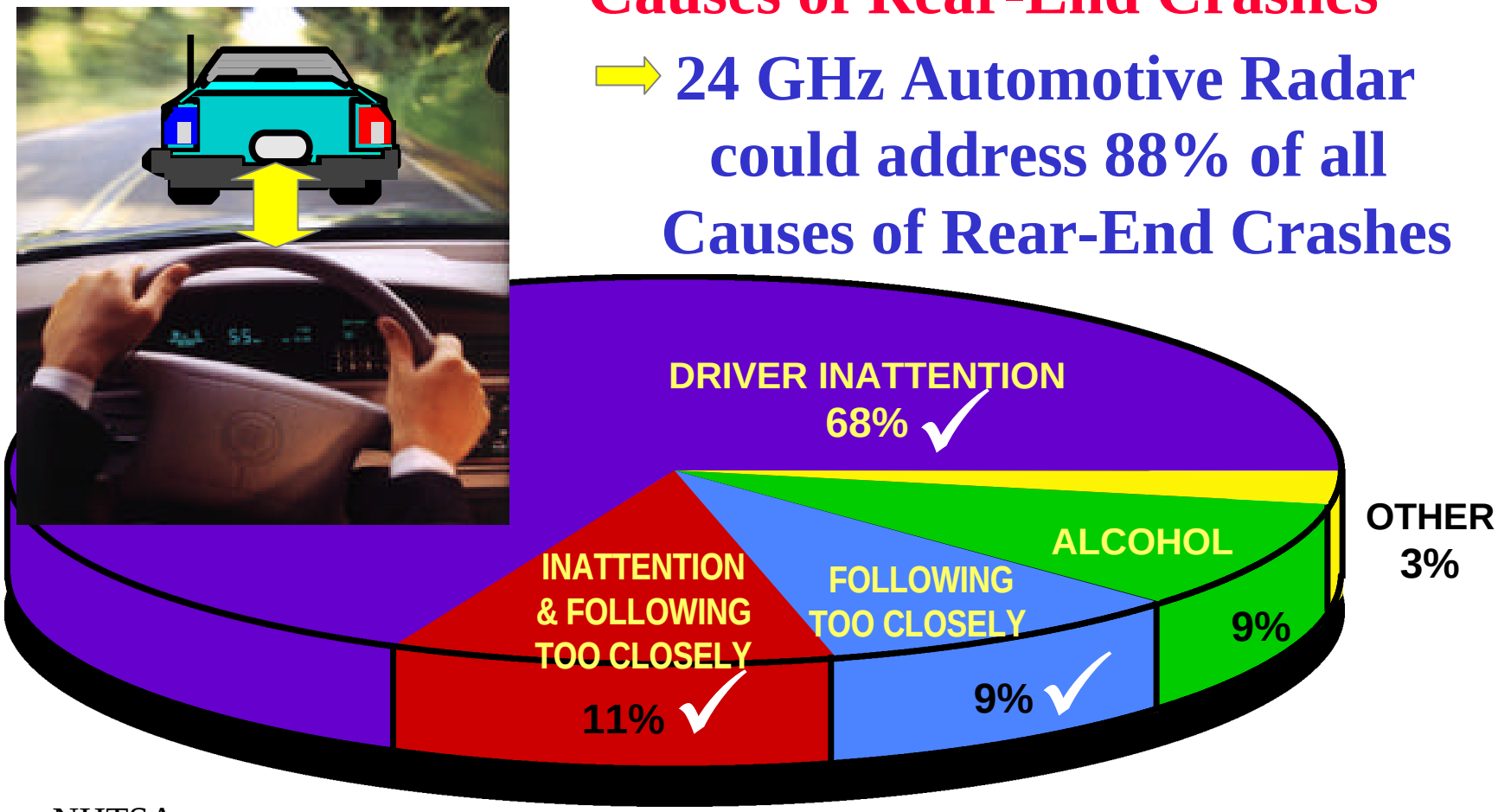

Source: NHTSA

Compatibility of 24 GHz SRR with Radio Astronomy

- FCC Policy: Acceptance of 1km separation distance
- ITU-Limit with respect to RA769-1 recommends -251dBm/Hz
  - such a best case sensitivity can only be achieved under the following conditions:
    - all fluctuations of terrestrial and atmospheric noise are eliminated via calibration
    - the dish elevation is more than 30° to avoid influences from ground (MIT Haystack site)
    - the water vapor content of the atmosphere is nearly zero (only achievable on dry, cold winter nights)
- The realistic sensitivity depends on the dish elevation and varies from -248dBm/Hz to -203dBm/Hz

Single Entry Interference Scenario with Radio Astronomy

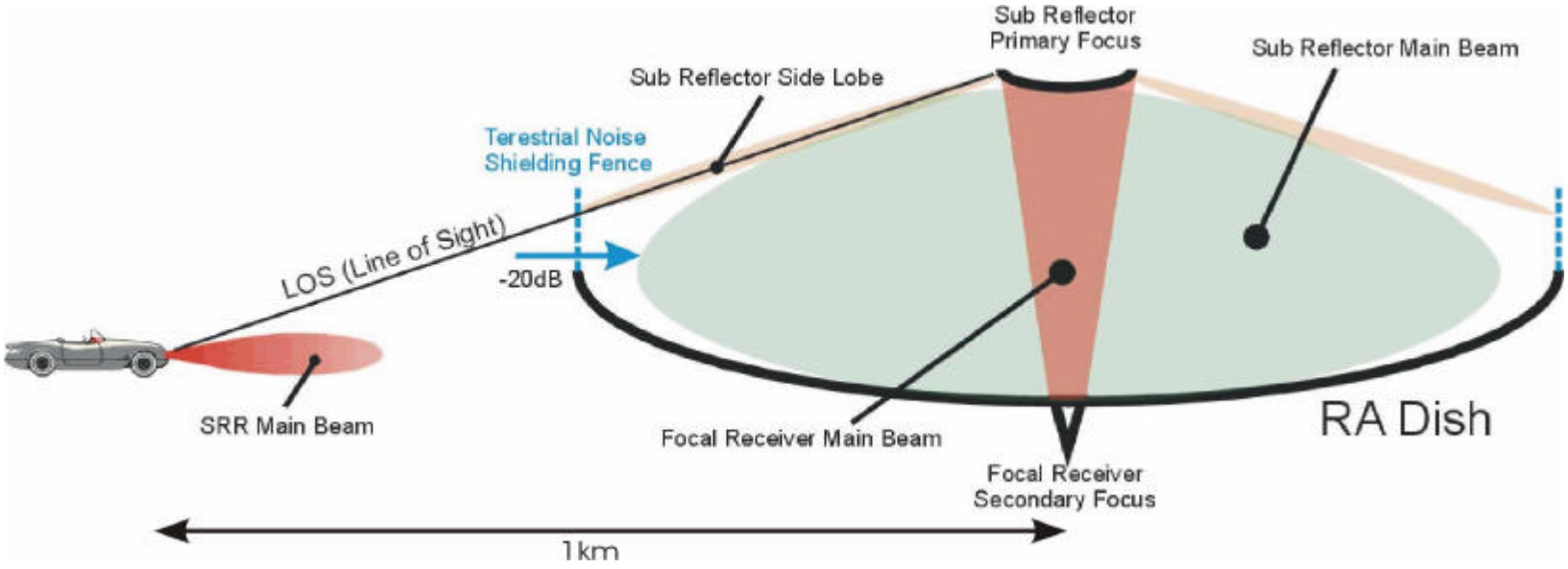

Shielding fences around the RA observatory provide further attenuation of 20dB.

24 GHz Short Range Radar

Dish angle	L_atm_dB Atmos. Loss in dB 0.16dB/km (7.5mm^2 H2O)	T terr in K (supressed due to shielding fence vs. Spillover)	T_sys in K	max. PSD Tx in dBm/Hz w.o. shielding	PSD Sensitivity in dBm/Hz 0.1kT sys	mean Antenna sidelobe gain in dB (ITU-R SA.509-2 + F.1245-1)	max. PSD_Tx in dBm/Hz w.o. shielding	Remaining Margin w.r.t FCC part 15 UWB limit - 101.25dBm/Hz equivalent to 500µV/m at 3m **w.o. shielding w.r.t 1km**	Remaining Margin w.r.t FCC part 15 UWB limit - 101.25dBm/Hz equivalent to 500µV/m at 3m **with shielding w.r.t 1km**	Remaining Margin w.r.t FCC part 15 UWB limit - 101.25dBm/Hz equivalent to 500µV/m at 3m **w.o. shielding w.r.t 1km**	Remaining Margin w.r.t FCC part 15 UWB limit - 101.25dBm/Hz equivalent to 500µV/m at 3m **with shielding w.r.t 1km**	Minimum Protection distance in m **w.o.** shielding	Minimum Protection distance in m **with** shielding
90	0,8	0	107,7	-91,8	-247,8	-13,0	-91,8	9,45	29,45	9,45	29,45	337	34
85	0,8032	0	108,0	-91,8	-247,8	-13,0	-91,8	9,45	29,45	9,45	29,45	337	34
80	0,8112	0	108,6	-91,7	-247,7	-13,0	-91,7	9,55	29,55	9,55	29,55	333	33
75	0,8288	0	109,9	-91,7	-247,7	-13,0	-91,7	9,55	29,55	9,55	29,55	333	33
70	0,8512	0	111,6	-91,6	-247,6	-13,0	-91,6	9,65	29,65	9,65	29,65	329	33
65	0,8832	0	114,1	-91,5	-247,5	-13,0	-91,5	9,75	29,75	9,75	29,75	325	33
60	0,9232	0	117,2	-91,4	-247,4	-13,0	-91,4	9,85	29,85	9,85	29,85	322	32
55	0,976	0	121,3	-91,3	-247,3	-13,0	-91,3	9,95	29,95	9,95	29,95	318	32
50	1,0448	0	126,8	-91,1	-247,1	-13,0	-91,1	10,15	30,15	10,15	30,15	311	31
45	1,1312	0	133,7	-91,5	-246,8	-12,3	-91,5	9,78	29,78	9,78	29,78	324	32
40	1,2432	0	143,0	-92,5	-246,5	-11,1	-92,4	8,80	28,80	8,80	28,80	363	36
35	1,3936	0	155,8	-93,6	-246,2	-9,6	-93,6	7,65	27,65	7,65	27,65	414	41
30	1,5984	0	174,0	-94,8	-245,7	-7,9	-94,8	6,48	26,48	6,48	26,48	474	47
25	1,8896	0	201,3	-96,1	-245,1	-5,9	-96,2	5,10	25,10	5,10	25,10	556	56
20	2,3328	0	246,6	-97,7	-244,2	-3,5	-97,7	3,58	23,58	3,58	23,58	663	66
15	3,0736	10	343,5	-99,3	-242,7	-0,4	-99,3	1,95	16,95	1,95	16,95	799	142
10	4,5504	15	572,9	-101,5	-240,5	4,0	-101,5	-0,25	9,75	-0,25	9,75	1029	325
5	8,752	100	1927,7	-103,8	-235,3	11,5	-103,8	-2,58	2,42	-2,58	2,42	1345	756
2	40,4032	200	2995571	-81,8	-203,3	21,5	-81,8	19,48	19,48	19,48	19,48	106	106

CONCLUSION: Compatibility of 24 GHz SRR to Radio Astronomy

- **For normal RA measurement conditions with an elevation of more than 10° over ground, the protection requirement of 1km is never exceeded.**
- **In the rare occasion of measurements of 5° elevation angle the worst case protection distance is 1350m without taking any shielding into account.**
- **With a fence shielding of 20dB the protection distance stays below the protection requirement even for an elevation angle as low as 5°.**

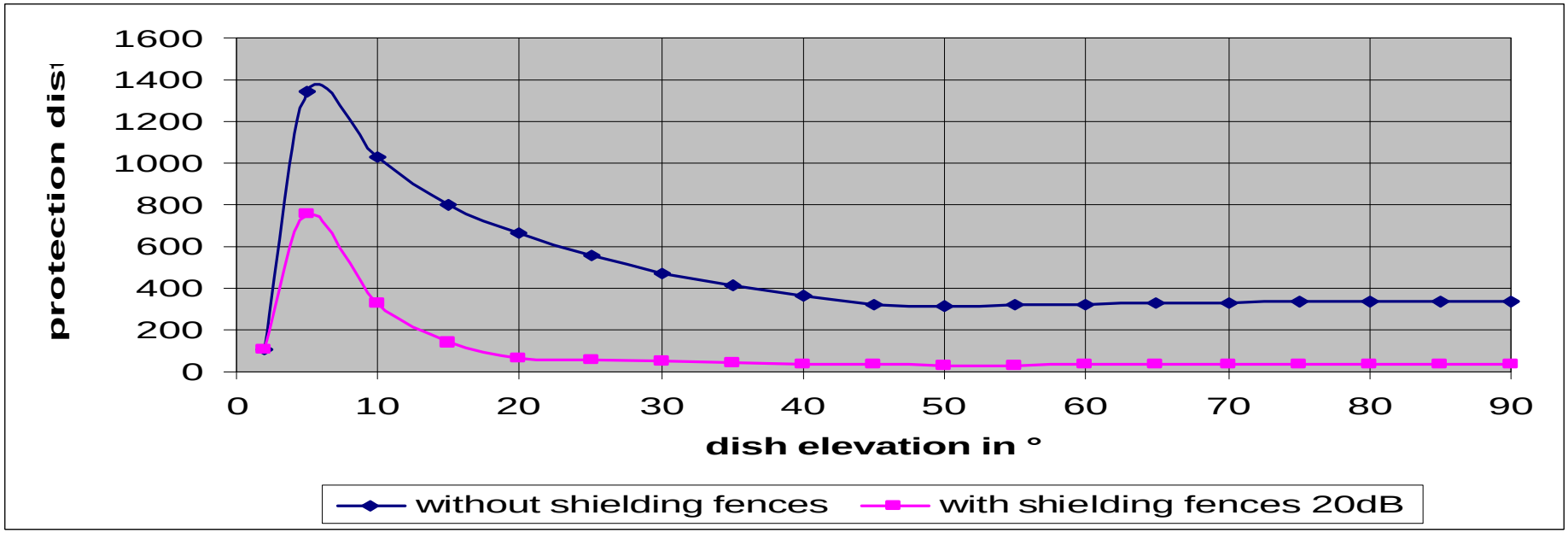

Compatibility of 24 GHz SRR to Earth Exploration Satellite Services

- Long term EESS threshold is -163dBW/100MHz ≡ -213dBm/Hz according to ITU-R SA.1029-1.
- SARA provides a calculation for the system “MEGHA-TROPIC”. Other satellites with different gains and therefore different footprint sizes render similar results.
- Vehicle aggregation is considered via an area density based on two different models for crowded city highways as well as suburban areas.
- Peak traffic density situations in cities are not critical due to scattering and shielding effects by surrounding buildings.

24 GHz Short Range Radar

Channel bandwidth	**B = 400 MHz**
Footprint diameter	**D = 35.4km**
Nadir angle	**α = 52.3°**
LOS elevation angle	**ß = 37.7°**
Altitude	**h = 817km**
Max. Antenna gain	**G = 40dBi**
HPBW	**Θ = 1.65°**
LOS distance	**l = 1336km**

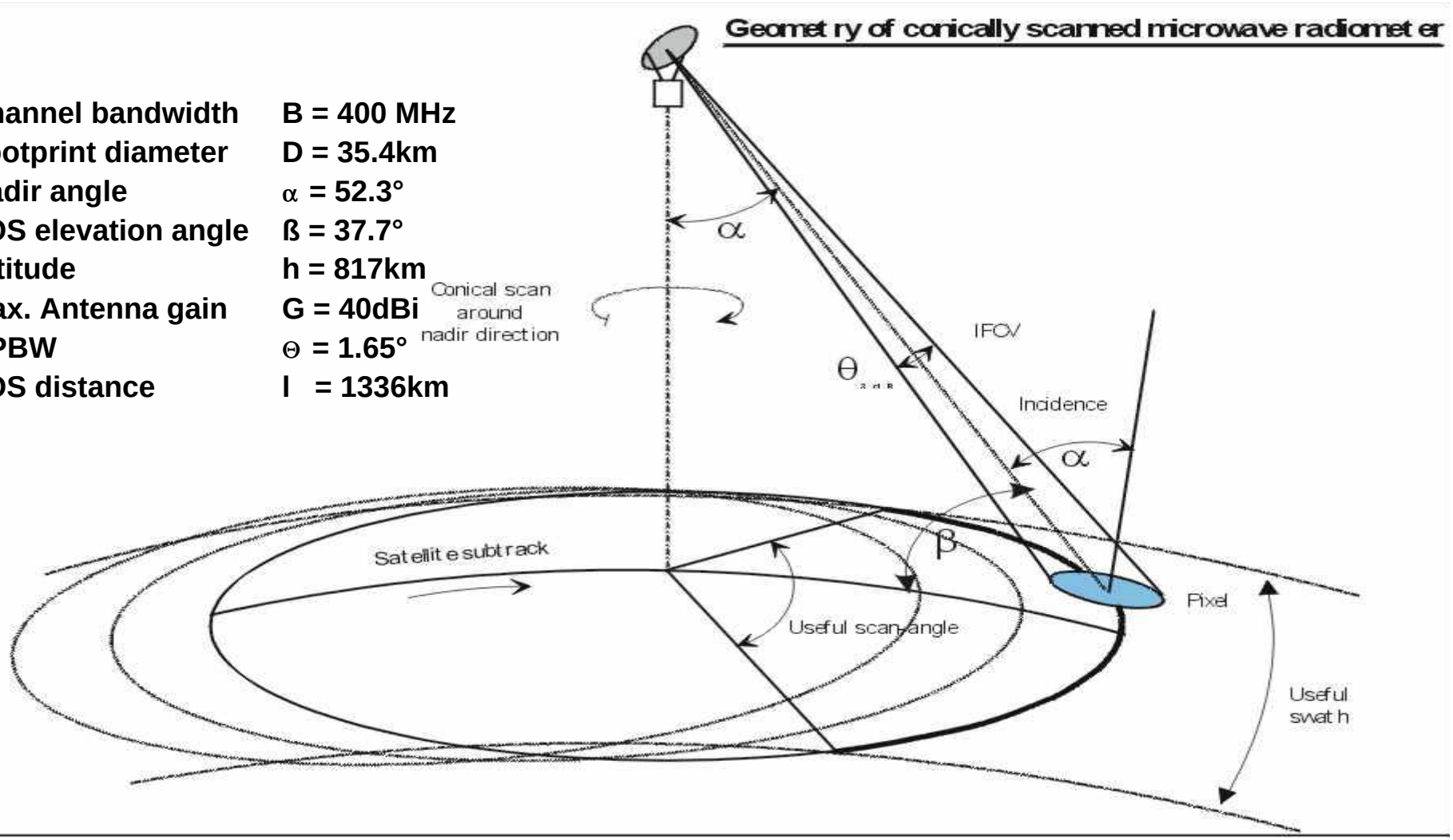

Margin calculation of 24 GHz SRR vs. EESS

	Figure	Comment
EESS Limit	-213 dBm/Hz	w.r.t. ITU-R SA.1029-1
G_rx_mean	-(+38.5) dBi	mean Antenna Gain over HPBW, 40dBi-1.5dB
Propagation Loss	-(-182.5) dB	LOS $L_{los} = 20\log(4\pi l/\lambda)$, l = 1336km
Gating	-(-3) dB	50% calculation time within cycle w.o. Transmission
Relative elevation side lobe gain TX	-(-25.1) dB	w.r.t RPE of SRR specification $g_{tx} = -0.666*\beta$
Atmospheric Loss	- (-1.3) dB	0.16dB/km * 5km / cos (α)
SRR Transmitter PSD EIRP	-(-101.25 dBm/Hz)	w.r.t. FCC part 15 500µV/m at 3m
Margin	**+ 61,65 dB**	Equivalent to **1,462,177 sensors** in the entire footprint

•With respect to the footprint diameter of 35.4km corresponding to an area of 984km^2 the margin of 61.65dB is equivalent to an SRR density of 1486 units/km^2 .

•Assuming 4 active sensors on the car pointing in the same direction and a long term market acceptance rate of 40%, this translates into a maximum vehicle density of 929 cars/km^2 .

•With respect to a uniformly distributed car orientation over the azimuth and a half-power beamwidth of the sensor cluster in the order of 90° only a quarter of the sensors will be pointing in the direction of the satellite. This renders 6dB of additional margin translating into **3715 cars/km^2** .

CONCLUSION: Compatibility of 24 GHz SRR to Earth Exploration Satellite Services

Rectangular street grid Scenario

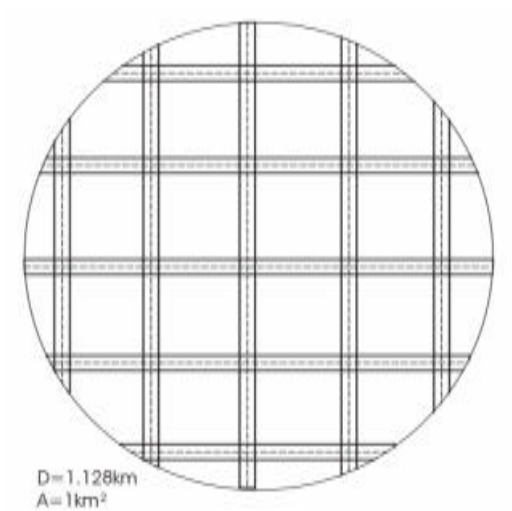

Radiation Pattern Envelope

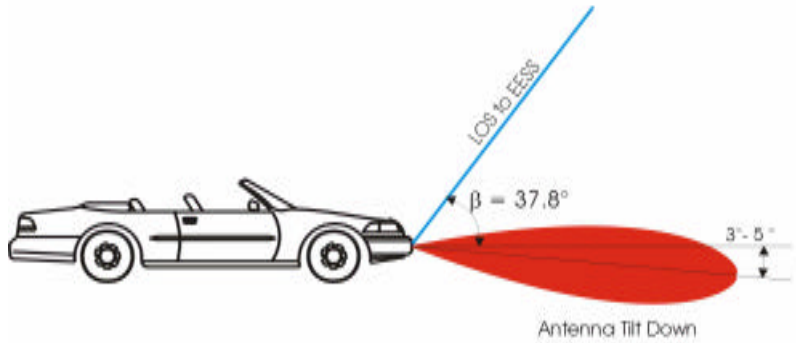

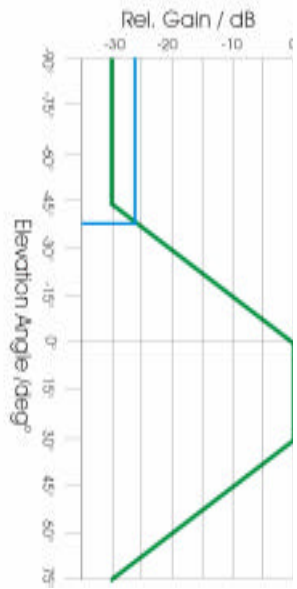

- Highway scenario: rectangular grid of highways with intersections every 3.5km with 8 lanes and 20m vehicle separation => 123 vehicles/km^2
- Suburban city scenario: rectangular grid of streets with intersections every 250m with 2 lanes and 50m vehicle separation => 330 vehicles/km^2
- With respect to the calculated maximum vehicle density of 3715 vehicles/km^2 a safety margin of 9dB remains even for a worst case superposition of both scenarios.

Relocation of SRR center frequency is not feasible:

- SRR need to perform two types of measurements:
  - precise distance measurements (low power UWB emissions)
  - velocity Doppler measurements (narrowband CW according to existing Part 15)
- No alternate allocation of 100-200 MHz (10dBm EIRP) is available within 15-30 GHz
- Global allocation is necessary for economies of scale
- Discrete mass market components do not exist for frequencies higher than 24 GHz
- Alternative MMIC technology (GaAs) are cost prohibitive for SRR systems
- An additional delay of 3-5 years is inevitable for development (supplier and OEM)
- There is no high volume demand beyond 24 GHz in the telecom industry
- Traffic safety benefits are ready for deployment - and would be postponed in best case. Lives would be lost unnecessarily!

Power reduction is not feasible:

Reduction of power would cause the detection range to drop below critical thresholds:

- The rear-end collision functionality would be compromised
- Protection for pedestrians would be severely degraded

⇒ All potential benefits (Backup-Aid, rear-end collision mitigation, Parking Aid and Passenger protection etc.) would be jeopardized.