HOGAN & HARTSON
L.L.P.

ARI Q. FITZGERALD
PARTNER
(202) 637-5423
AQFITZGERALD@HHLAW.COM

COLUMBIA SQUARE
555 THIRTEENTH STREET, NW
WASHINGTON, DC 20004-1109
TEL (202) 637-5600
FAX (202) 637-5910
WWW.HHLAW.COM

January 30, 2002

Mr. William F. Caton
Acting Secretary
Federal Communications Commission
445 Twelfth Street, S.W.
Washington, D.C. 20554

Re: Revision of Part 15 of the Commission's Rules Regarding Ultra-Wideband Transmission Systems
ET Docket No. 98-153
***Ex Parte* Communication**

Dear Mr. Caton:

Pursuant to Section 1.1206(a)(2) of the Commission's rules, we are writing on behalf of the Short Range Automotive Radar Frequency Allocation group ("SARA"), an association of automotive and automobile component manufacturers working to develop and deploy 24 GHz short-range radar systems ("SRRs") intended to significantly improve road safety. 1/ SRRs will serve as the core component of the next generation of collision avoidance and collision mitigation systems. 2/ SARA is filing this letter to address concerns that it believes may have been transmitted by the National Telecommunications and Information Administration ("NTIA") to the Commission last week.

Although the NTIA transmittal has not been entered into the proceeding record or otherwise made available for SARA's review, SARA understands from press reports that it would prohibit UWB SRRs operating at 24

1/ SARA is made up of the following automotive component manufacturers: *A.D.C., Bosch, Delphi Automotive Systems, Hella, InnoSent, Megamos, Siemens VDO, TRW, Tyco Electronics, Valeo* and *Visteon*. It also includes the following automobile manufacturers: *Audi, BMW, DaimlerChrysler, Fiat, Ford, General Motors, Jaguar, MAN, Opel, Porsche, PSA Peugeot Citroën, Renault, Saab, Seat, Skoda, Volkswagen* and *Volvo*.

2/ Working in conjunction with an automobile's existing safety systems, the incidence and severity of automotive accidents can be greatly reduced. For example, statistics from the National Highway Transportation Safety Administration suggest that SRR could address 88 percent of all causes of rear-end collisions.

BERLIN BRUSSELS LONDON PARIS BUDAPEST PRAGUE WARSAW MOSCOW TOKYO
NEW YORK BALTIMORE McLEAN MIAMI DENVER BOULDER COLORADO SPRINGS LOS ANGELES

GHz. Importantly, SARA understands that the transmittal effectively would require all SRR operations to be located in another, higher band such that no SRR emissions would occur in the 23.6 – 24.0 GHz band currently allocated for radio astronomy and passive earth sensing.3/

SARA, to say the least, was greatly surprised to hear the reports that after nearly four years of this closely-watched proceeding in which *none of the 800+ filings have suggested that 24 GHz SRRs could present an interference problem*, NTIA now purportedly presents a proposal to the FCC that would effectively ban this technology. With barely two weeks before the FCC's expected decision, SARA finds itself in a Kafkaesque dilemma of responding to arguments it has not seen and perhaps do not even exist. Nevertheless, the stakes are so high and the time so short that SARA feels compelled to file this ex parte letter to counter any misconceptions that might be contained in, or could result from, the reported NTIA transmittal. As this complex proceeding draws to a close, SARA stands ready to work with both the FCC and NTIA to resolve any remaining issues that could stand in the way of approval of 24 GHz SRRs.

SARA explains below why the reported NTIA transmittal not only would be wholly unnecessary on interference grounds, but why it would also kill or delay for many years the significant public safety benefits of SRRs. Specifically, SARA explains that no party has raised concern about harmful interference caused by 24 GHz SRRs. As for interference to radio astronomy, the absence of such a filing probably stems from the fact that, based on an analysis using ITU-specified protection criteria, low-power UWB 24 GHz SRRs will not cause interference to radio astronomy operations. (We note that in the U.S., observatories typically have control over an area at least 1 km out from the radio-telescope.) Another analysis, also based on ITU-recommended limits, demonstrates that the aggregate emissions from realistic numbers of SRRs would be too low to cause harmful interference to the passive Earth Exploration Satellite Service ("EESS"). Because there will be no harmful interference caused by 24 GHz SRRs, the FCC may, consistent with U.S. treaty obligations, permit the use of SRRs even in "restricted" bands protected by international footnote S5.340. Finally, any requirement that the center frequency of SRR devices be moved above 24.125 GHz will present technical barriers so severe and so expensive to overcome that the devices will not be commercially viable.

I. The Record Contains No Support for the Reported NTIA Restrictions

With more than 800 submissions in the record, not a single filing over the course of the nearly four years of the UWB proceeding has opposed the use of

---

3/ Most of the SRRs being developed by SARA members would operate with a bandwidth of 5 GHz centered at 24.125 GHz.

SRR at 24 GHz.4/ Notably, not even the radio astronomy community has felt a need to comment on any potential impact on the 23.6 – 24.0 GHz radio astronomy allocation. Radio astronomers, represented by the Committee on Radio Frequencies ("CORF"), are experienced at and are known for defending their spectrum interests when they believe that a pending FCC decision could adversely impact their operations. Indeed, since the UWB proceeding was commenced in 1998, CORF has filed a dozen comments in various other FCC proceedings, but has not filed anything in this docket to express concerns about low-powered UWB operations. Accordingly, NTIA's reported transmittal – coming a mere three weeks prior to the Commission's expected adoption of a UWB order – is wholly unsupported by the exhaustive record in this proceeding.

II. SRRs Will Not Interfere with Passive Services

A. Radio Astronomy

Vehicle-mounted 24 GHz SRRs will not cause harmful interference to radio astronomy operations. As the Commission noted in the NPRM in this proceeding:

> We believe that UWB devices can generally operate in the region of the spectrum above approximately 2 GHz without causing harmful interference to other radio services. The UWB signals will quickly fall off below the background noise because of the high propagation losses at 2 GHz and above. Further, most radio services operating above 2 GHz use directional antennas that generally discriminate against reception of undesired signals. 5/

For these reasons, the Commission proposed to permit UWB operations above 2 GHz at the general Part 15 emission level. 6/

Although the Commission's tentative conclusions described above apply to all UWB devices above 2 GHz, the Commission has previously considered specifically the potential impact of vehicular radars on radio astronomy operations.

4/ SARA notes that at a December 19, 2001 meeting, NTIA's Deputy Administrator Michael Gallagher confirmed to SARA representatives that he was not aware of any opposition from the government to the use of SRRs at 24 GHz. Moreover, nothing in NTIA's public submissions in this docket suggest a concern about SRR operations at 24 GHz.

5/ NPRM at ¶ 27.

6/ The general Part 15 emission level for operations above 2 GHz, such as 24 GHz SRR operation, is 500 microvolts/meter as measured at a distance of 3 meters. 47 C.F.R. § 15.209(a).

In its order adopting rules for long-range automotive radars at 77 GHz, the Commission explained: "Given that radio astronomy equipment discriminates against off-beam signals and that vehicle radars will be used when in motion, we believe there is little likelihood of interference to radio astronomy operations." 7/

An analysis performed by SARA reinforces the Commission's conclusion that vehicular radars pose little threat to radio astronomy. 8/ SARA bases its analysis on ITU Recommendation RA.769-1, which provides technical assumptions and formulas relating to the sensitivity of a radio astronomy receiver. These assumptions9/, along with those relating to the operating parameters of proposed SRR devices,10/ were used to compute the separation distance required to provide adequate protection to a theoretical radio astronomy receiver under ideal conditions. This calculation results in a protection distance of 387 meters.

In a second computation, the data are adjusted to reflect a more realistic receiver sensitivity by taking into account typical "real life" fluctuations in the noise floor caused by unavoidable technical and natural sources, combined with antenna noise fluctuation due to changing atmospheric, terrestrial and cosmic noise. This calculation results in a protection distance of 290 meters.

Thus, the analysis indicates that a radio astronomy receiver will be protected from interference so long as SRRs do not operate within 290 - 387 meters of the receiver. As the FCC noted last year, radio astronomy observatories in the United States "typically have control over access to a distance of one kilometer from the telescopes to provide protection from interference caused by automobile spark plugs and other uncontrolled RFI sources."11/ This protection perimeter of 1

7/ *Amendment of Parts 2, and 15 of the Commission's Rules to Permit Use of Radio Frequencies Above 40 GHz for New Radio Applications,* Third Report and Order, 13 FCC Rcd 15074, 15078 ¶ 13 (1998). At issue here was the third harmonic of 77 GHz radars which fall into the radio astronomy band at 217 – 231 GHz, described by CORF as "one of the most important" radio astronomy bands. *Id.*

8/ The analysis is attached as Exhibit A.

9/ In addition to the data in RA.769-1, the analysis assumes a 20 dB allowance for the presence of shielding fences around the dish and the subreflector. Shielding fences are used for mitigating terrestrial noise.

10/ The assumptions include the following: (1) the SRR satisfies the proposed field strength limit of 500 microvolts/meter measured at three meters (equal to power spectral density of –41.3 dBm/MHz); (2) the SRR is mounted on the automobile at 0.6 meters above the ground; (3) the SRR antenna beam is parallel to the ground with a elevation beamwidth of 15 degrees; and (4) ground clutter loss is assessed at 15 dB for rural areas in accordance with Recommendation ITU-R P.452-9, section 6.

11/ *Amendment of Parts 2 and 15 of the Commission's Rules to Permit Use of Radio Frequencies Above 40 GHz for New Radio Applications,* ET Docket 94-124, Third Memorandum Opinion and Order, FCC 00-161, 15 FCC Rcd 10515 (rel. May 17, 2000) at ¶ 8. The Commission relied on

kilometer is approximately three times more than required to provide adequate protection to radio astronomy receivers against possible interference from SRR devices.

B. Earth Exploration Satellites

The Earth Exploration Satellite Service ("EESS") also holds an allocation in the 23.6-24.0 GHz band. SARA's analysis, attached as Exhibit B, shows that under the defined conditions and limits contained in ITU-R SA.1029, a maximum vehicle density of 1770 vehicles/km^2 results in a safety margin factor of 3.9 or 6 dB. Accordingly, 24 GHz SRRs also pose no threat to EESS operations.

III. 24 GHz Is Critical to the Viability of SRRs

SARA understands that the NTIA transmittal would effectively require 24 GHz SRR operations to relocate to a higher band, so as to avoid placing intentional emissions into the 23.6 – 24.0 GHz band. Quite simply, this would kill SRRs for the foreseeable future. As a commercial device, SRR can only reach its potential to save lives and reduce the damage caused by traffic accidents if it is commercially viable. Therefore, the cost of the device must be low enough to attract more than just the very high-end of the car-buying public. The component manufacturer members of SARA report that the anticipated per unit cost of the SRR devices is already at or near the maximum of what the market can bear. Currently, the sample unit cost is expected to be approximately $35, resulting in a complete multi-sensor system cost of about $500, which is the maximum acceptable cost. As described below, the costs involved in any shift in frequency would destroy the economic fundamentals necessary to make the product viable and degrade the safety capabilities of the product.

- Most of the proposed SRR devices involve dual mode operations: a low power, UWB mode for high resolution distance measurement of objects around a vehicle, and a second, narrowband Doppler mode, useful for precise velocity measurements of target objects. Despite the dual modes, only a single oscillator and antenna are feasible due to cost and technological reasons. By shifting the center frequency of the UWB mode operation to a different frequency, two problems will occur: additional RF switching elements would have to be inserted and most likely a second antenna would be needed. Such a change would significantly increase the cost of the unit. Also important, such a change would

---

information contained in IEEE Vehicle Radar Standards Subcommittee document VRS-96-6 and went on to state that nothing in the record presented contrary evidence. Moreover, the Commission specifically recognized the possibility of erecting fences to mitigate interference from vehicular radars.

result in a substantially larger device, thereby decreasing device placement flexibility.

- To avoid duplicating components as in the scenario described above, an alternative approach would be to move both the UWB and the Doppler modes to the same new band. However, SARA knows of no other band that could accommodate the carrier in Doppler mode, which requires an emissions level of 10-20 dBm within a bandwidth of 150-250 MHz. 12/ The Commission would have to make a new allocation under this scenario to permit Doppler radars within the frequency bands between approximately 15 GHz and 30 GHz.

- Because the 24 GHz band is populated by many different existing applications, a 24 GHz SRR permits the use of high performance inexpensive "off-the-shelf" discrete components, available due to a mature, automated production process and high volume chip production. This advantage would not exist at higher frequencies, as no discrete components are available. Moreover, the performance of industrial chips degrades rapidly beyond 25 GHz, which means that the presently available chip manufacturing processes and chip packaging technologies would be insufficient to meet industry requirements.

- For MMICs at higher frequencies (*e.g.*, 27 GHz), the more expensive gallium arsenide would have to be used, adding significantly to the cost of the SRR devices. MMICs with adequate power output that are fabricated using silicon germanium technology are not expected until 2007.

- In order to achieve the necessary economies of scale, the frequency allocation for SRRs must be harmonized worldwide. 24 GHz is already available globally for the higher powered operations needed for the Doppler velocity measurement mode.

- Even a minor change in frequency would result in a delay of three to five years for re-development of the SRR at the automotive supplier and another two years for series development at the automotive manufacturer. This would amount to an at least five year overall delay. Because this is an unacceptable length of time for the automotive industry, the SRR projects of the various companies within SARA would be dropped.

IV. Nothing Prevents the FCC from Permitting UWB Operations in the Passive Bands at 23.6-24.0 GHz

Given that SRRs will not cause harmful interference to the passive services, the FCC has the legal authority to permit SRR operations as proposed,

---

12/ The proposed 24 GHz SRRs rely on the higher limit contained in Section 15.249.

notwithstanding ITU footnote S5.340, which states that "all emissions are prohibited in" the 23.6-24.0 GHz band (and other bands allocated to passive services). The Commission may take such action without violating ITU treaty obligations.

A. S5.340 Cannot Be Read Literally

S5.340 is commonly cited as a black and white prohibition on emissions within the passive bands. However, the rule cannot be read literally. No one has argued seriously that transmitting stations operating in adjacent or nearby frequencies must be designed so that absolutely no emissions occur in the covered spectrum. Indeed, specific ITU Recommendations (*e.g.*, RA.769-1) have been developed to define precisely the threshold interference levels of emissions permitted into the radio astronomy bands. Thus, even if the center frequency of the SRR devices were moved up by 2.5 GHz and the SRR bandwidth were defined by the 10 dB points, the 23.6 – 24.0 GHz band would still be subject to out-of-band or spurious emissions from the 20 dB bandwidth emissions of the SRRs. Such is already the case for out-of-band emissions from ISM devices at 24 GHz.

B. FCC Decisions Are Governed by US246, Which Does Not Apply to Part 15 Devices

The FCC is, in fact, bound not by the language contained in international footnote S5.340, but by US246, the domestic implementation of S5.340. 13/ When the Commission implemented S5.340 domestically, it did not adopt S5.340's "all emissions are prohibited" language. Instead, US246 states that "no station shall be authorized to transmit in" the restricted bands. For reasons explained below, this alternative language, viewed in context of Commission terminology, leads to a conclusion that Part 15 devices are not covered by US246.

In response to a Commission NPRM containing the proposed language of US246, CORF, representing the interests of the radio astronomy community, objected to this alternate language, fearing that it would not preclude the use of low power or experimental systems that do not require licenses. The Commission dealt with CORF's objection by stating that the revised text was chosen "because its terms and restrictions are definable, enforceable and consistent with adopted Commission policy. Therefore, we feel that US246 as proposed in the NPRM will

---

13/ *See Amendment of Part 2 of the Commission's Rules Regarding Implementation of the Final Acts of the World Administrative Radio Conference, Geneva, 1979*, Second Report and Order, 54 RR 2d 1500, 1514 (1983) at ¶ 12 ("US246 Implementation Order"). The Commission noted that the new Table of Frequency Allocations contained in § 2.106 includes the international table "for informational purposes." Thus, although referenced within § 2.106, S5.340 itself is non-binding. *Id.* at ¶ 12. *See also* 47 C.F.R. § 2.104 ("The International Table is included for informational purposes only.")

better serve all parties involved." 14/ In its decision implementing US246, the Commission did not directly address – or, notably, deny – CORF's contention that some emissions into the radio astronomy bands would not be precluded under the revised text. Although the Commission did not explain precisely what it meant by "definable terms" and "consistent with adopted policy," its statement in response to CORF's objection clearly indicates that it purposefully selected wording different than that contained in S5.340. Moreover, such a statement logically invites a textual analysis that is informed by the Commission's customary usage of these terms.

1. Use of the Term "Station"

Section 2.1 of the Commission's rules defines station as "one or more transmitters or receivers or a combination of transmitters and receivers, including the accessory equipment, necessary at one location for carrying on a radiocommunication service, or the radio astronomy service." 15/ To the casual reader, Part 15 devices might appear to fall within this definition. However, the Commission has virtually never used the term "station" to refer to a Part 15 device. 16/ Instead, the Commission uses a variety of other terms – "devices," "equipment," "transmitters" – to describe units operating under Part 15. This consistent pattern of usage indicates that the Commission did not contemplate that Part 15 devices would be covered by the use of the term "station" in US246.

2. Use of the Term "Authorized"

As explained above, the Commission carefully chose the language in US246 to be "definable" and "consistent with prior Commission policy." Presumably, therefore, the Commission intended the use of the term "authorized" in US246 to be consistent with its traditional usage of the term in which it contrasts Part 15 devices against transmitters "in the authorized services." For example, it often states that "Part 15 equipment operates on a non-interference basis to

---

14/ *US246 Implementation Order,* 54 RR 2d at 1514 (¶ 79).

15/ 47 C.F.R. § 2.1(c).

16/ The Commission did refer to a "Part 15 station" in a single footnote to a 1991 order. Because the order was issued in a Mass Media docket, it most likely was not prepared by staff extremely familiar with the Part 15 regime. *Review of the Technical Assignment Criteria for the AM Broadcast Service,* Report and Order, 6 FCC Rcd 6273, 6333 n. 68 (1991). We also note that the Commission has referred to "CB radio stations" in various orders. CB radio receivers (but not transmitters) are subject to Part 15 equipment certification rules. Unlike most Part 15 devices, however, CB radios operate on specific frequencies allocated to the CB Radio Service, which is governed by Part 95 of the Commission's rules.

authorized radio services." 17/ Other typical examples include the following excerpts:

- "CORF suggests that it is reasonable to have limits for Part 15 devices that are different from those for authorized services . . . .
  Part 15 products, which are often mass-produced for consumers, are far more numerous than authorized transmitters." 18/

- "[T]he Commission expects each system to be specifically engineered for the individual health care facility in order to avoid interference not only to authorized services but also to other biomedical telemetry equipment." 19/

Moreover, Section 15.5(b) states that:

> Operation of an intentional, unintentional, or incidental radiator is subject to the conditions that no harmful interference is caused and that interference must be accepted that may be caused by the operation of an authorized radio station, by another intentional or unintentional radiator, by ISM equipment, or by an incidental radiator. 20/

Because "authorized radio station" is enumerated separately from "another intentional or unintentional radiator" (*i.e.,* a Part 15 device), this grammatical construction indicates that Part 15 devices are not "authorized radio stations." Therefore, as both the Commission's rules and orders illustrate, devices operating pursuant to Part 15 are considered distinct from *authorized* stations and services.

3. Section 15.11

Additional evidence that US246 does not apply to Part 15 operations can be found in Section 15.11 of the Commission's rules. Like other Parts of the rules, Part 15 contains a "cross references" section that advises the user on what other Commission rules are directly applicable to operations under Part 15.

17/ *See, e.g., Amendment of Part 15 of the Commission's Rules to allow certification of equipment in the 24.05 - 24.25 GHz band,* Notice of Proposed Rulemaking, 13 FCC Rcd 16385, 16385 (1998).

18/ *Revision of Part 15 of the Rules Regarding the Operation of Radio Frequency Devices without an Individual License,* Memorandum Opinion and Order, 6 FCC 5405, 5407 (1991).

19/ Amendment of Part 15 of the Commission's Rules to Permit Operation of Biomedical Telemetry Devices on VHF TV Channels, Report and Order, 12 FCC Rcd 17828, 17834 (1997). The "biomedical telemetry equipment" referenced in this cite is a Part 15 device.

20/ 47 C.F.R. § 15.5(b).

Specifically, Section 15.11 states that "the provisions of Subparts A, H, I, J and K of Part 2 apply to intentional and unintentional radiators, in addition to the provisions of this part." 21/ Notably, this list does *not* include Subpart B of Part 2, in which US246 is found. Under the interpretive canon of *expressio unis*, the omission of Subpart B from this list is evidence of the Commission's intent that US246 not apply to Part 15 operations. 22/

21/ 47 C.F.R. § 15.11.

22/ Even if one assumed that US246 were applicable to unlicensed Part 15 operations, one could nonetheless conclude that the Commission has authority under the ITU treaty to amend this domestic footnote to permit intentional UWB emissions into the radio astronomy band at 23.6-24.0 GHz. The Commission can implement such an amendment without violating its treaty obligations so long as technical limitations on those emissions are imposed to avoid "harmful interference" to radio astronomy operations.

As the Commission explained in its *US246 Implementation Order*, the Final Acts of the WARC comprise an international treaty but:

> The treaty does provide some flexibility, however, through Radio Regulation No. 342 [renumbered as S4.4.] that states:
>
> "Administrations of the Members shall not assign to a station any frequency in derogation of either the Table of Frequency Allocations given in this Chapter or the other provisions of these Regulations, except on the express condition that harmful interference shall not be caused to services carried on by stations operating in accordance with the provisions of the Convention and these Regulations."
>
> This enables the enactment of domestic provisions different from international provisions in cases where the physical characteristics of the radio spectrum and of the domestic uses permit operations within the stated interference constraint. . . .

See US246 Implementation Order at ¶ 10.

The Commission has explicitly relied upon Radio Regulation S4.4 in the past to permit "non-conforming" uses. *See, e.g., Applications of TCI Wireless, Inc.*, Order, 13 FCC Rcd 13820 (WTB 1998); *Amendment of Part 2 of the Commission's Rules to Allocate Spectrum for Mobile-Satellite Services*, First Report and Order, 8 FCC Rcd 4246 (1993). On other occasions, the Commission has permitted non-conforming uses without an explicit reference to S4.4. *See, e.g., DirectSat Corporation*, 11 FCC Rcd 22375 (OET/IB 1996) at ¶ 8; *Boeing Company*, DA 01-3008 (OET/IB, rel. Dec. 21, 2001).

The FCC is far from alone in this use, either explicitly or implicitly, of S4.4 to permit non-conforming operations. Indeed, administrations in the U.K. and Finland have permitted non-conforming uses in restricted bands covered by S5.340. *See* UK Table of Allocations at 10.68 - 10.70 GHz, allowing radiolocation with certain limitations, and the Finnish Table at 2690-2700 MHz, providing an allocation for mobile radio. These restricted bands permit exceptions for certain countries, but the UK and Finland do not fall within the exceptions. *See* international footnotes S5.483 and S5.422. Thus, precedent exists for allowing intentional emissions into a restricted band covered by S5.340, so long as the use is on a non-interfering basis, as Part 15 operations always are. *See* 47 C.F. R. § 15.5. S4.4 allows national administrations to permit such uses without creating a treaty violation.

V. The Regulatory Approval Process for UWB Is On Track in Europe

SARA understands that some individuals at NTIA, or at a Federal agency being represented by NTIA, may believe it is unnecessary to authorize 24 GHz SRRs in the United States because European regulators will, in any event, never approve such a usage at 24 GHz. First of all, SARA does not believe the ongoing approval process in Europe should be determinative in the FCC's decision, in view of SARA's demonstration that it will not cause harmful interference to passive services and the vast U.S. public interest benefits associated with improved automotive safety. Second, given the significant progress being made in Europe, SARA is puzzled by the assertion that European regulators will block the approval of 24 GHz SRRs.

Currently, a task force composed of representatives from the Spectrum Engineering Working Group ("WG SE") of the European Conference of Postal and Telecommunications Administrations ("CEPT") and from the European Telecommunication Standardization Institute ("ETSI"), is in the process of coordinating spectrum sharing compatibility studies that will analyze the potential interference of SRR devices with other 24 GHz services, including radio astronomy and EESS. The studies are scheduled for completion by June 2002, after which they will be submitted to the WG SE plenary for approval. The compatibility studies represent a significant step toward obtaining approval for the 24 GHz SRRs.

Moreover, the introduction of 24 GHz SRRs is being promoted by the European Commission in Brussels. As recently as January 25, 2002, staff at the European Commission stated to representative of SARA that SRRs will be an essential enabling technology for its "e-Safety" initiative, which seeks to reduce the number of deaths caused by automobile accidents by 50 percent by the year 2010. With this important support from Brussels, 24 GHz SRRs have an excellent chance of approval.

Pursuant to the European Commission's Radio and Telecommunications Terminal Equipment ("RTTE") Directive, component manufacturers are required to comply with harmonized ETSI standards for equipment self-certification purposes. For 24 GHz SRRs, a draft standard is already available (EN 301 091) and can be finalized, released for voting and

---

Moreover, any such amendment of US246 would be viewed as a logical outgrowth of this proceeding, a major purpose of which is to determine whether UWB operations should be permitted in restricted bands. As such, no additional notice and comment would be necessary. *See, e.g., Omnipoint Corp. v. FCC*, 78 F.3d 620, 631 (D.C. Cir. 1996), *citing American Water Works Ass'n. v. EPA*, 40 F.3d 1266, 1274 (D.C. Cir. 1994); *Hodge v. Dalton*, 107 F.3d 705 (1997).

published in the official journal of the European Commission as soon as the CEPT studies and the regulatory process are concluded.

Given the progress described above, any suggestion that European regulators are "blocking" approval of 24 GHz SRRs is not credible. In any event, if the major automobile and component manufacturer members of SARA believed there were no chance of European approval of 24 GHz SRRs, it is doubtful they would continue to spend millions of dollars on the development of such systems.

VI. CONCLUSION

For the foregoing reasons, no technical or legal issues stand in the way of allowing automotive and automobile component manufacturers to develop 24 GHz SRRs intended to reduce significantly the tragedies that occur daily on our nation's roadways. It is now up to the Commission to decide whether this promising and non-interfering technology will be made available to the American public. As always, SARA stands ready to work with the Commission and NTIA to resolve any remaining questions.

Respectfully submitted,

Ari Q. Fitzgerald
David L. Martin
Counsel for SARA

cc: Chairman Michael Powell
Commissioner Kathleen Abernathy
Commissioner Kevin Martin
Commissioner Michael Copps
Peter Tenhula
Bryan Tramont
Monica Desai
Paul Margie
Edmond Thomas, OET
Julius Knapp, OET
Karen Rackley, OET
John Reed, OET

EXHIBIT A

24 GHz Ultra Wide Band, Short Range Radars for Automotive Applications

Radio Astronomy Protection Levels and Distances for the Band 23.6 to 24.0 GHz

1. Summary

This paper examines the potential of harmful interference into a Radio Astronomy (RA) receiver from an ultra-wideband (UWB) Short Range Radar (SRR) that satisfies the FCC's proposed field strength limit of 500 μV/m measured at 3m (e.g., power spectral density = -41.3 dBm/MHz).

Recommendation ITU-R RA.769-1 establishes protection criteria for RA continuum observations, including the following emission limits:

Maximum Power Spectral Density,	(PSD) = -251dBm/Hz
Maximum Power Flux Density,	(PFD) = -117dBm/m²
Maximum Power Flux Spectral Density,	(PFSD)= -203dBm/Hz/m²

To satisfy these emission limits, the separation distance needed between a UWB-based SRR and a RA receiver is between 387 meters (in theory) and 290 meters (in practice), based on calculations described below. The FCC has recognized that RA observatories typically have control over access to a distance of 1 km from RA telescopes. (*See* Third Memorandum Opinion and Order in Docket ET No. 94-124, FCC 00-161, May 17, 2000 at ¶ 8.) Consequently, these UWB radars pose no threat of harmful interference.

2. Interference Levels

Figure 1. Typical RA Receiver Antenna

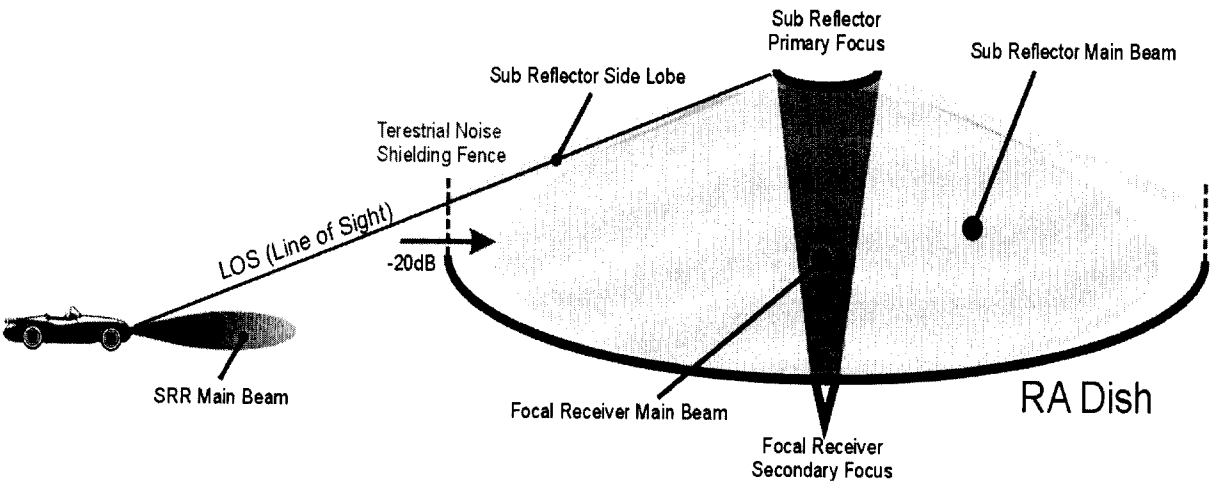

Notes:

1. The model receiver in RA.769-1 assumes an antenna gain of 0dBi for the sidelobes of the main parabolic reflector (19° or more from the main beam axis).
2. No additional allowance has been made for lower sidelobes resulting from improved antenna designs.
3. There are mechanical means (i.e., shielding fence at dish edge, as well as back and side protection for subreflector) for mitigation of terrestrial noise, which would include interference from SRRs located on the ground. A 20dB allowance for shielding has been included
4. The SRR is mounted 0.6m above ground. Its antenna main beam is parallel to the ground, with an elevation beamwidth of 15 degrees. Ground clutter loss can be assessed in accordance with Recommendation ITU-R P.452-9, section 6 (approximately 15dB for rural areas).

2.1 Theoretical Protection Distance

Table 1 shows the calculation of a protection distance based on the sensitivity parameters of a theoretical or "ideal" averaging receiver as described in ITU-R RA.769-1. A minimum sensitivity of $\Delta T = 51.4\mu K$ is calculated for an integration time of 2000 seconds and a bandwidth of 400MHz, assuming a stationary inherent noise floor without any further fluctuations. The protection level is calculated based on 10% of the minimum sensitivity.

.

$\Rightarrow PSD_{RX} = 10\log(0.1 * 51.4\mu K * k_{Boltzmann})$

$= 10\log(5.14\mu K * 1.38*10^{-23}\ J/K)$

= -251 dBm/Hz

Table 1. Calculation of protection distance for theoretical receiver sensitivity

Parameter	Value	Note
PSD_{TX}	-101.3dBm/Hz	EIRP (500µv/m at 3m, 1MHz measurement bandwidth)
PSD_{RX}	-(-251dBm/Hz)	$\Delta T = 5.14\mu K$
Relative $G_{TX\ horizontal}$	0 dBi	Relative Gain in vertical direction
Ground Clutter Loss	-15 dB	With reference to ITU-R P.452-9
RX Shielding Loss of focal Receiver vs. Terrestrial noise	-20 dB	Worst case assessment
Atmospheric Loss l'= 0.16dB/km	-0,16dB/km * 387m ~ 0dB	
$-20\log((4\pi R)/\lambda)$	-111.8dB	**R = 387m** , $\lambda = 0.0125m$
Circular Polarisation Loss	-3dB	
Margin	0dB	
Resulting theoretical RA protection distance = 387m		

2.2. Practical Protection Distance

In practice, the sensitivity of an actual RA receiver suffers from inherent fluctuations of its noise floor. These stem from unavoidable technical and natural sources such as LNA noise figure and gain fluctuation, together with antenna noise fluctuation attributable to changes in the atmospheric, terrestrial and cosmic noise over the averaging time. These inherent fluctuations are mitigated to some degree by using sophisticated calibration methods, resulting in an achievable sensitivity on the order of ΔT = 10mK , especially for situations in which no protective shielding against terrestrial noise sources is provided for the reflectors.

Using the sensitivity of 10mK ΔT = 1mK (10% of the sensitivity)

$\Rightarrow PSD_{RX} = 10\log(1mK * k_{Boltzmann})$

$= 10\log(1mK * 1.38*10^{-23}\ J/K)$

= -228.6 dBm/Hz

Table 2. Calculation of protection distance for realistic receiver sensitivity

Parameter	Value	Note
PSD_{TX}	-101.3 dBm/Hz	EIRP (500µv/m at 3m, 1MHz measurement bandwidth)
PSD_{RX}	-(-228,6dBm/Hz)	ΔT = 1mK
Relative $G_{TX\ horizontal}$	0 dBi	Relative Gain in vertical direction
Ground Clutter Loss	-15 dB	With reference to ITU-R P.452-9
RX Shielding Loss of focal Receiver vs. Terrestrial noise	-0 dB	No shielding
Atmospheric Loss l'= 0.16dB/km	-0,16dB/km * 387km ~ 0dB	
$-20\log((4\pi R)/\lambda)$	-109.3dB	**R = 290m**, λ = 0.0125m
Circular Polarisation Loss	-3dB	
Margin	0dB	
Resultant RA protection distance for realistic receiver sensitivities, without shielding = 290m		

In both cases (with and without shielding) a similar protection distance is required. This is due to the inherent increase in receiver noise floor fluctuation caused by terrestrial sources in the absence of shielding.

EXHIBIT B

Analysis of Interference and Compatibility of 24 GHz Automotive Short Range Radar (SRR) to passive Earth Exploration Satellite Service (EESS) at 23.6-24.0 GHz

INTRODUCTION

This document addresses the aggregate interference level caused by multiple SRRs to earth exploration satellites and demonstrates the resulting margin of safety.

EESS Conical Scanning Diagram

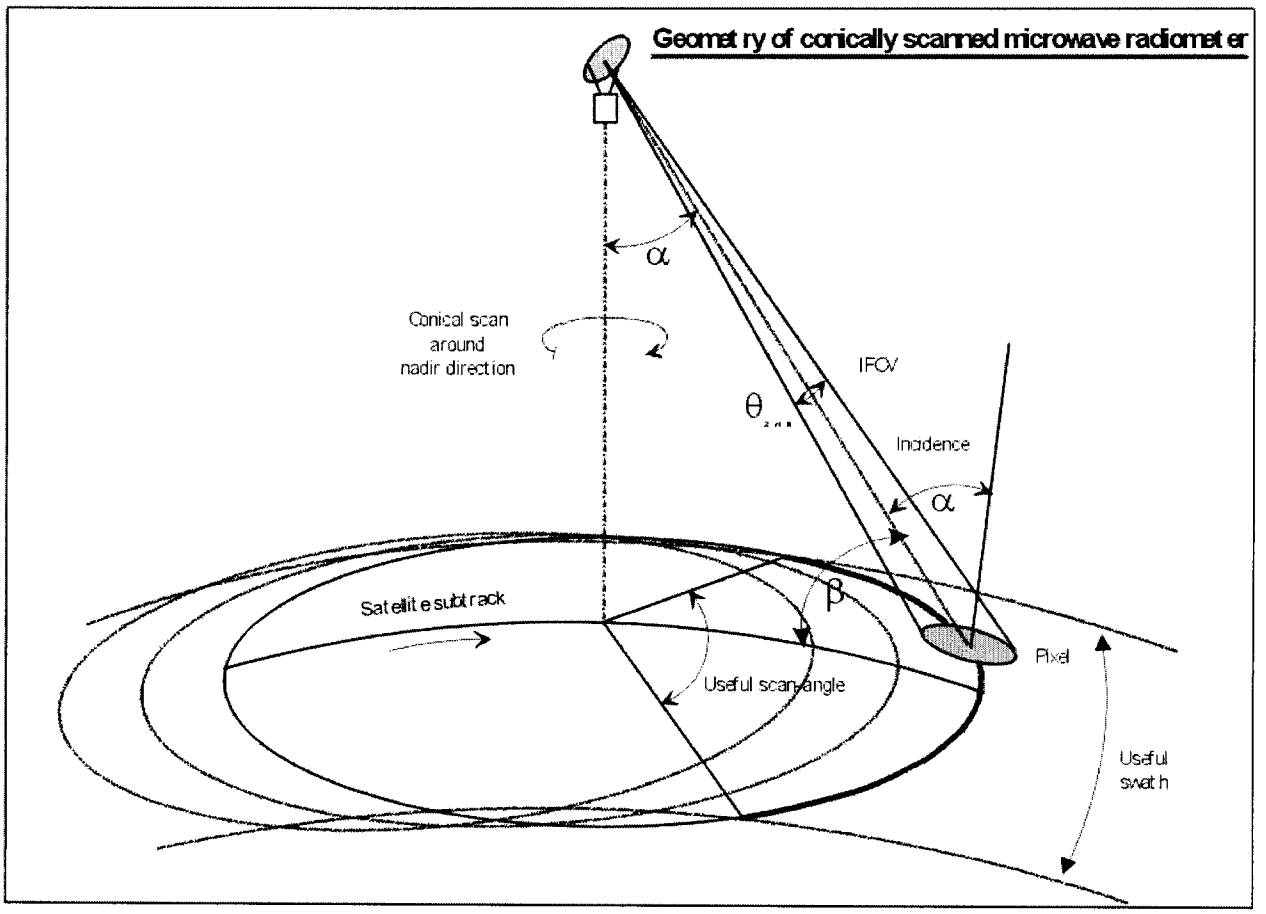

CALCULATIONS

1. EESS Interference criteria (from ITU-R SA.1029-1 at 24GHz)

P_interference	<=	-163 dBW	in 100 MHz;
Equivalent to:			
PSD_rx	=	-213 dBm/Hz	

2. Official Data of an EESS example "MEGHA-TROPIC"

Channel bandwidth	B	=	400MHz
Footprint diameter	D_foot	=	35.4km
Nadir angle	Δ	=	52.3° *(incidence angle at footprint center)*
LOS elevation angle	E	=	37.7° = 90° - Δ *(...in order to reach the maximum EESS antenna gain measured from ground)*
Altitude	h	=	817km
Max. Antenna Gain	G_rx	=	40dBi (efficiency 96%)
HPBW	T	=	1.65°
dish diameter	d	=	0.65m
wavelength	O	=	0.0126m
LOS distance	l	=	1336 km *(line of sight between EESS and SRR Transmitter)*

3. Plausibility check for above data

G_rx	|	$38000/(HPBW)^2$	=	13957 = 41.4dBi O.K.
G_rx	|	7 + 20log(d/O)	=	41.25dBi O.K.
R_sat	=	h + R_earth	=	(6370+817) km = 7187km
m_earth			=	$5.98*10^{24}$kg
G			=	$6.67*10^{-11}$ Nm^2/kg^2
V_sat			=	sqrt(G * m_earth / R_sat) = 7450 m/s
t_av			=	D_foot / V_sat = 4.75s
Processing Gain G_Int	|	sqrt(2* t_av * B)	=	61656 = 47.9dB
Sensitivity			=	-174dBm + 7dB (NF) – G_Int = -214.9 dBm/*Hz* *(good match with ITU requirement)*
l	|	h/cos(Δ)	=	1336km O.K.

4. Margin Calculation *(positive sign indicates loss, negative sign indicates gain)*

	Figure	Comment
EESS Limit	-213 dBm/Hz	w.r.t. ITU-R SA.1029-1
G_rx_mean	-(+38.5) dBi	mean Antenna Gain over HPBW, 40dBi-1.5dB
Propagation Loss	-(-182.5) dB	LOS 20log(4Σl/O)
Polarization Loss	-(-3) dB	Uniform distribution of field strength vector
Gating	-(-3) dB	50% calculation time within cycle w.o. Transmission
Relative side lobe gain TX	-(-24.9) dB	w.r.t RPE of SRR specification –0.66*E
Atmospheric Loss	- (-1.3) dB	0.16dB/km * 5km / cos (Δ)
SRR Transmitter PSD EIRP	-(-101.25 dBm/Hz)	w.r.t. FCC part 15 500μV/m at 3m
Margin	+ 64,45 dB	Within entire footprint

A margin of 64.45dB corresponds to 2,786,121 acceptable SRRs within the footprint.

The footprint diameter, D_foot = 35.4km, corresponds to an area field of view, FOV = 984km^2.
The SRR transmitter area density is 2,786,121 / 984km^2 = 2831.4 SRRs/km^2.

Only 4 of the 8 sensors mounted on any one automobile will be transmitting at any one time. Therefore, the acceptable area density of vehicles equipped with SRRs is 708 vehicles/km^2.

The long-term market scenario in year 2020 assumes a 40% penetration of vehicles with SRRs. Therefore, the maximum compatible vehicle density will be 1770 vehicles/km^2.

A highway scenario assuming, averaged over the footprint, 8 lanes in a rectangular grid, intersections at 3.5 kilometers, and a vehicle separation of 20 meters, has a vehicle density of 123 vehicles/km^2.
A suburban city scenario assuming, averaged over the footprint, 2 lanes in a rectangular grid, intersections at 250 meters, and a vehicle separation of 50 meters, has a vehicle density of 330 vehicles/km^2.
In the worst possible case, both scenarios could occur simultaneously, meaning that approximately 453 vehicles/km^2 might be achieved in hot spots.

Comparing this figure with the maximum vehicle density of 1770 vehicles/km^2 (as derived from the limits specified in ITU-R SA.1029-1) shows a safety margin factor of 3.9 or 6 dB. Additional margin is provided by the shielding effects of buildings in high-density environments. Results are comparable for other satellite types, including those with higher gain and correspondingly smaller footprints.

Suburban City Street Scenario

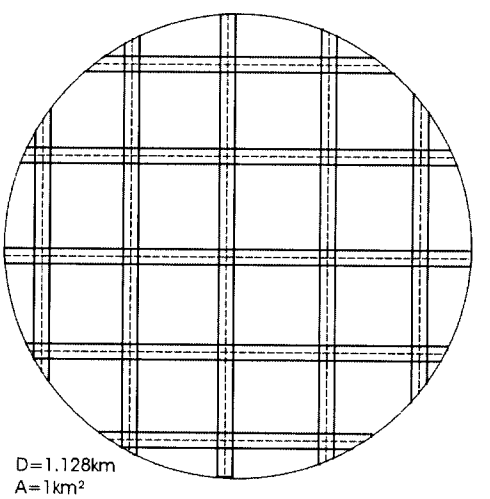

CONCLUSION

The result demonstrates that the aggregate power level of the SRRs is below the recommended interference limit for passive earth exploration satellites.