APPENDIX B
DESCRIPTION OF AGGREGATE MODEL

B.1 FORMULATION OF EMITTER DISTRIBUTION

This section will summarize details of the emitter distribution and the equations used in UWBRings. It is based upon NTIA TM-89-139, Section 3, and upon the original RINGS[75] source code. The RINGS concept was already described and illustrated in Section 5.3.

As mentioned in 5.3, multiple emitters with the same emission frequency and emission level are distributed on equally-spaced, concentric, circular rings surrounding the base[76] of the victim receive station. The emitters are distributed in an annular region bounded by a minimum (inner) and maximum (outer) ring radius. After the emitter surface density is specified the model automatically assigns the number of rings, ring separation, and number of emitters per ring, for a symmetric distribution. Figure B-1 shows a top down view of the simplified distribution.

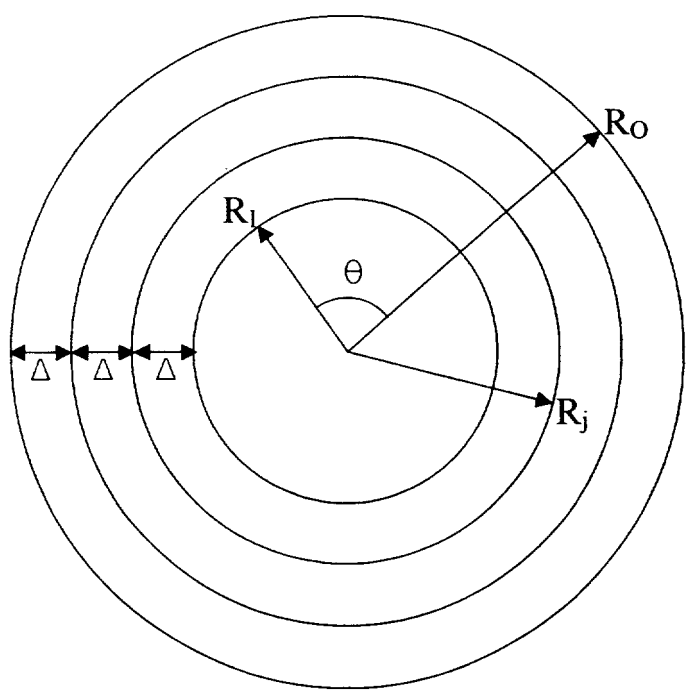

Figure B-1. Example of RINGS Symmetric Distribution of Emitters.

[75] "RINGS" is the proper name of the program described in the documentation.

[76] Could also be a subsatellite point.

As seen in Figure B-1 the distance between all rings is a constant value, Δ, which the program must determine. From this value the number of rings, M, is determined. This leads to the calculation of the radius of the jth ring, R_j, for all M rings in the distribution. Given that this radius is taken to be a great circle distance, the line of sight range from the ring can be calculated to find the path loss.

We also must determine the appropriate number of emitters to assign to each ring. These values must be chosen in such a way as to provide symmetry in the emitter distribution, so as to not favor their angular separation within a ring or their radial separation between rings at the expense of each other.

Figure B-1 also shows that the full annulus could be sectioned off through use of a horizontal plane angle θ, which could be the horizontal 3 dB beamwidth. In this case the number of emitters per ring, N_j, would have to be modified appropriately.

TABLE B-1 shows a list of all parameters used and their units of measurement:

TABLE B-1

R_I	Inner ring radius	km
R_O	Outer ring radius	km
R_j	The jth ring radius in the distribution	km
θ	Sector angle defined by the antenna horizontal beamwidth	radians
K	Emitter density	#/km^2
T	Total number of emitters in the full annulus	
N	Number of emitters in the sector	
N_j	Number of emitters in the sector in the jth ring	
Δ	Ring separation distance	km
M	Number of rings used	

To begin the derivations the first thing to determine is the total number of emitters in the full annulus. This value is simply the product of emitter density with the area bounded by inner and outer ring radii. It is shown in the following equation:

$$T = K\pi\left(Ro^2 - R_I^2\right) \tag{B1}$$

Next, to find the total number of emitters in the sector outlined by θ, we scale the total emitters in the annulus by the ratio of sector angle to full annulus. Thus, we arrive at the following equation:

$$N = T\frac{\theta}{2\pi} \tag{B2}$$

N is the actual number of emitters which contribute to the horizontal main beam aggregate in a given scenario. For cases where we are also considering antenna backlobes[77] we apply the backlobe gain to the T minus N remaining emitters.

To find the separation between rings we consider that the area occupied by each emitter is $1/K$. Considering this area as a square seems to work good towards equidistantly spacing the emitters. We could then consider that the ring spacing should be one side of this square. This leads to the following equation:

$$\Delta = \frac{1}{\sqrt{K}} \tag{B3}$$

The determination of the total number of rings for a simulation follows from dividing the distance between innermost and outermost rings by the ring separation. This quotient gives the total number of Δs. If we attach one ring to each we need to add an extra ring to bound the outside of the outermost Δ. This leads to:

$$M = \frac{R_O - R_I}{\Delta} + 1 \tag{B4}$$

In cases where M does not calculate to be an integer the original RINGS program rounded it to the nearest integer. This introduced some error which was deemed to be insignificant. UWBRings adds an improved algorithm which instead rounds M up to the nearest integer and recalculates the value of Δ from (B4). This liberty is taken because (B3) is only an approximation, however, intuitively, M must be an integer. Additionally, this allows for an exact implementation of (B7).

In order to calculate path loss between each ring and the victim receive antenna we need an expression for the radius of the jth ring. This follows from adding the appropriate number of Δs to the radius of the innermost ring. This leads to:

$$R_j = R_I + (j-1)\Delta, \quad j = 1 \text{ to } M \tag{B5}$$

The last of the core equations to consider is the number of the N emitters of the sector to assign to each ring. As was stated in Section 5.3 the emitter distribution is based on having the ratio of number of emitters on each ring to ring radius to be constant. This leads to the following:

---

[77] *See infra* Section B.2.3, at B-16 for discussion on backlobes.

$$\frac{N_j}{R_j} = k \tag{B6}$$

To get the value of k we consider that the following equation must also be satisfied:

$$\sum_{j=1}^{M} N_j = N \tag{B7}$$

After substitution we arrive at:

$$\sum_{j=1}^{M} k\left[R_I + (j-1)\Delta\right] = N \tag{B8}$$

After rearranging and simplifying we progress through the following two equations:

$$k\left[\sum_{j=1}^{M} R_I + \Delta\sum_{j=1}^{M}(j-1)\right] = N \tag{B9}$$

$$k\left[MR_I + \Delta\sum_{j=1}^{M-1} j\right] = N \tag{B10}$$

Using a well known series identity allows us to solve for k:

$$k = \frac{N}{MR_I + \dfrac{\Delta(M-1)M}{2}} \tag{B11}$$

This leads directly to the expression for N_j after substitution in (B6):

$$N_j = \frac{2N\left[R_I + (j-1)\Delta\right]}{2MR_I + \Delta(M-1)M} \tag{B12}$$

Intuitively N_j should be an integer, however, there are advantages in allowing it to be real. For example, it can happen that the sector geometry and emitter distribution parameters specified by the user could result in no emitters assigned to the first (inner) and other lower rings. A large outer/inner radius ratio and a low emitter density could allocate all emitters to the higher rings, since the number of emitters per ring is proportional to the

ring radius. This happens if we round N_j to be an integer, and threatens to distort the results because the closest rings are the most significant in the calculation.

A second reason for allowing N_j to be real is that it frees up the dependency of Δ on K and smooths the distribution toward a more realistic homogeneity. If we make Δ completely independent of K we can significantly improve the accuracy of readings under low emitter density, which would normally predict very large values of Δ. Using a small Δ (e.g., 10 meters) for all K will allow the simulation to better track variations in vertical pattern antenna gain.

These equations provide the foundation for computing the aggregate power level in a RINGS topology. To complete the derivation we extrapolate the single emitter received power into an aggregate received power level. First, the single emitter received power equation:

$$P_R(single) = [EIRP]\frac{G}{L} \tag{B13}$$

Where [EIRP] is the radiated power level of the interfering source; G is the receive antenna gain in the direction of the source; and L is the path loss between source and receive antenna.

This is easily extrapolated to the aggregate case in the following:

$$P_R(aggregate) = [EIRP]\sum_{j=1}^{M}\frac{N_j G_j}{L_j} \tag{B14}$$

Thus, the aggregate function loops through all M rings determining the number of emitters in each ring, the receive antenna gain in the direction of each ring, and the path loss from each ring. After the summation is complete it may then be multiplied by the user-entered interfering radiated power, or it may be used to determine what that EIRP should be to satisfy a user-entered performance criterion.

B.2 DETAILED UWBRINGS PROGRAM DESCRIPTION

Figure B-2 shows the UWBRings user interface. The main feature of the interface is the output chart whose associated data points appear directly beneath the chart. About this chart are various input sections, which from left to right, top to bottom are: the *Transmitter* section, the *Path Loss* section, the *Receive Antenna* section, the *General section* (composed of an assortment of miscellaneous inputs), and the *Radar Altimeter* section.

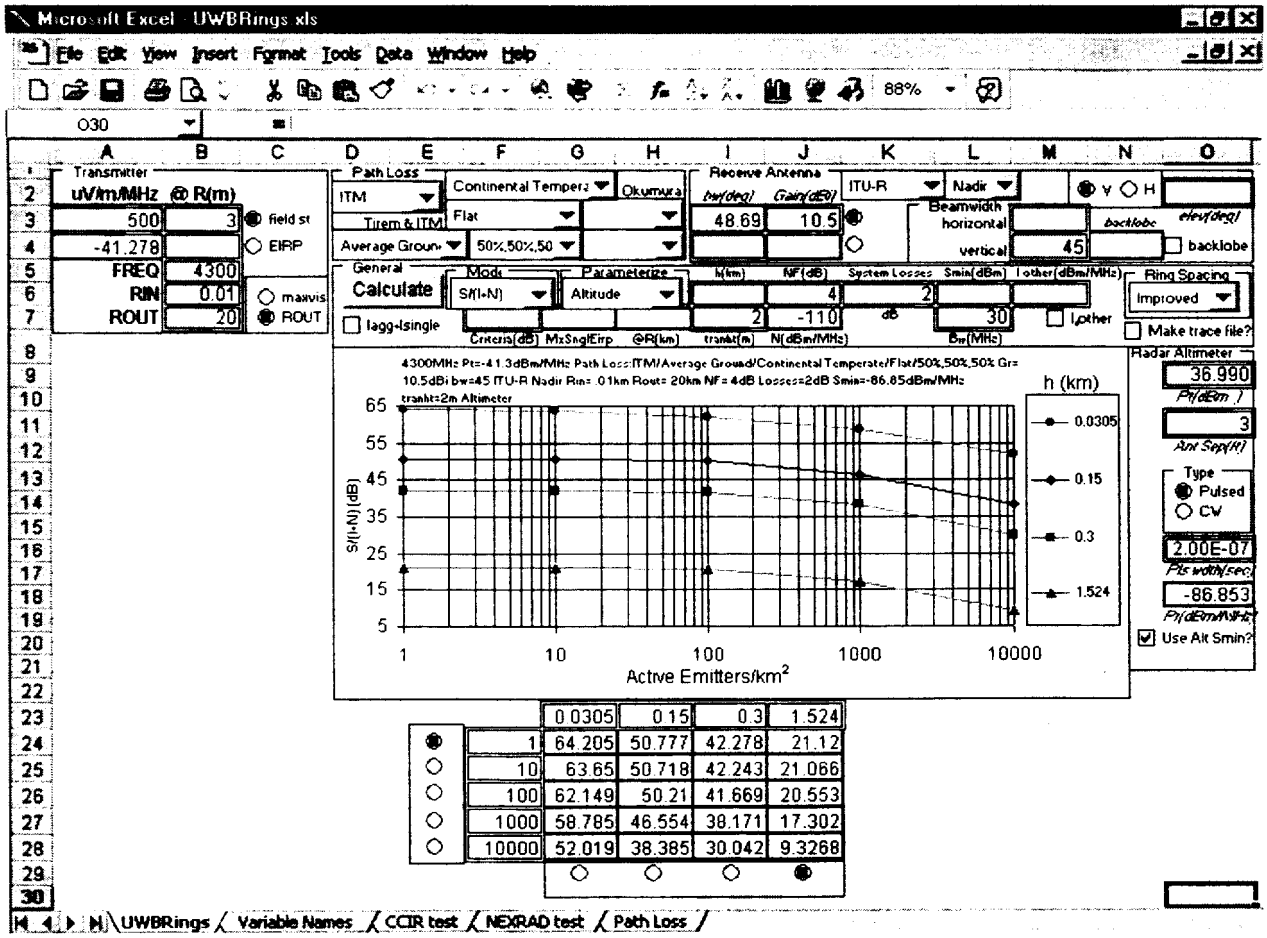

Figure B-2. UWBRings User Interface

The shaded cells in various input sections indicate user typed inputs from which the final program inputs may be derived. Following are descriptions of each of these interface elements.

B.2.1 Transmitter Section [A1:C7][78]

This section allows the user to specify characteristics of the UWB emitters. The EIRP used by each UWB emitter can be specified as either a field strength in microvolts per meter measured in a one MHz bandwidth [A3][79] at so many meters from the emitter [B3], or it can be specified directly in dBm/MHz in [B4]. The radio button pair in [C3:C4], namely, "field st" and "EIRP", allows the user to specify whether to take the input from the field strength cells [A3:B3] or from the EIRP cell [B4]. If the "field st" button is pushed

[78] This notation indicates the location of the section in the spreadsheet. Two cells separated by a colon indicate a range, which is a cell block defined by extremes of the range diagonal. Thus, in this example, cell A1 is at one end of the range diagonal, and cell C7 is at the other.

[79] Cell references are enclosed in square brackets.

UWBRings uses the spreadsheet conversion from field strength to power which appears in [A4]. All power levels used by the program are in dBm, whether they be interference or desired sources, or noise, and are with respect to a 1 MHz reference bandwidth. Desired received signal levels are converted to this reference bandwidth through application of the BWCF (Equation 3-13) of Section 3.

The center frequency of the victim receiver appears in [B5] in units of MHz. Though UWB bandwidths can span hundreds of MHz, the receiver bandwidths under test are all relatively narrow and center on an RF carrier indicated in [B5]. This input probably should have been placed in a Receiver section, but due to lack of space was left where it is.

The inner and outer radii of the emitter distribution are entered in units of kilometers in [B6] and [B7], respectively. The radio buttons appearing in [C6:C7], namely, "maxvis" and "ROUT", allow the user to select whether to confine the distribution to the outer radius, or to expand it to the radius of maximum visibility[80] depending on receive antenna height. Pushing "ROUT" limits the outer radius to that appearing in [B7] or to the maximum visibility of the receive antenna, whichever is smaller. Pushing "maxvis" always sets the outer ring radius to that determined by the maximum visibility of the receive antenna.

The values selected for RIN and ROUT are, needless to say, crucial to the meaningfulness of the results. RIN should generally be chosen according to a specified minimum separation distance,[81] or a minimum receive antenna far field distance,[82] whichever is greater. However, to facilitate coordination with the single emitter analyses it was determined to simplify by choosing 200 meters for most ground based receivers under study. This simplifying assumption may be underestimating interference for some systems, and allowance should be taken into consideration when forming policy. In cases of airborne receivers RIN was usually chosen to be 10 meters.[83] The best value to choose for ROUT would depend on the emitter densities of interest. If higher densities were deemed significant ROUT should be chosen to represent a city, which is where higher UWB densities would be expected. Lower densities could use a larger outer ring radius, or "maxvis", corresponding to outlying rural areas.

B.2.2 Path Loss Section [D1:H4]

This section allows the user to specify which path loss algorithm will be used for every link of every aggregate calculation. The main drop down list box for this section is over [D2:E2] and allows selection between the following path loss algorithms:

---

[80] This refers to the optical visibility to the horizon assuming a smooth spherical Earth.

[81] *See* the Nominal Approach Distance in the system tables of Appendix A.

[82] Field strengths in the near field are unpredictable and were not considered in this study.

[83] A zero meter radius, which would place the first ring directly under the receiver, would have zero emitters according to Equation B12. Ten meters seemed to be a close enough approximation.

Free Space
TIREM
Okumura
ITM

If free space loss is chosen all other drop down lists in this section are ignored.[84] If TIREM is selected the drop down lists over [D4:E4], [F2:G2], and [F3] are read. The following three tables show the options for each of these list boxes, respectively, and what parameter values they indicate:

TABLE B-2

Surface	Relative Permittivity	Conductivity (Siemens per Meter)
Average Ground	15	0.005
Poor Ground	4	0.001
Good Ground	25	0.020
Fresh Water	81	0.010
Sea Water	81	5.000

TABLE B-3

Radio Climates	Surface Refractivity
Equatorial (Congo)	360
Continental Subtropical (Sudan)	320
Maritime Subtropical (West Coast Africa)	370
Desert (Sahara)	280
Continental Temperate	301
Maritime Temperate, over land (United Kingdom and continental west coasts)	320
Maritime Temperate, over sea	350

[84] Typical Windows© style is to gray the inactive controls thus providing a visual aid to the user; but due to lack of time, and the fact that Excel© does not readily lend itself to this practice, the user must base understanding of inner program workings on the instructions of this appendix.

TABLE B-4

Ground Surface Features	Δh (meters)
Flat (or smooth water)	0
Plains	30
Hills	90
Mountains	200
Rugged Mountains	500

The Δh value of TABLE B-4 is defined to be the total range of path elevations after the highest 10 percent and lowest 10 percent have been removed. It is intended to give the model a feel for the roughness of the terrain. In addition to the refractivity, conductivity, and permittivity of the propagating medium, the TIREM algorithm is also a function of frequency, path length, transmit and receive antenna heights, humidity, and antenna polarization. The humidity refers to the surface humidity at the transmitter site. A nominal value of 10 g/m^3 was chosen for this study.

If Okumura is selected from the main drop down list, the drop down list over [G3:H3] is read. The following shows the options available:

Urban
Suburban
Open

The Okumura model is not intended to be a general purpose model, but rather, is simply a replication of results of path loss studies in particular urban, suburban, and rural areas of Japan. Path loss values predicted by this model are likely to be higher than those anticipated in US&P scenarios, but the model is included in this study to give a potentially closer to accurate feel for the effects of major metropolitan areas.

If Urban is selected, the drop down list over [G4:H4] is read, which gives choice between the following city sizes:

Small/Medium
Large

If ITM is selected from the main drop down list, the drop down lists of TABLEs B-2 through B-4 are read. In addition, the drop down list over [F4] is also read. This list gives choice between a number of combinations of reliability measures for time, location, and confidence, respectively. For example: 10, 50, and 90 percentages indicates that the received field strength of the desired signal will meet or exceed a specified criterion

10 percent of the time, at 50 percent of the intended receive locations, with a 90 percent confidence level.

Generally speaking, for each of these parameters the predicted path loss increases with the percentage of the parameter. The nominal setting would be 50, 50, and 50 percentages, which was selected for the aggregate portion of this study.

B.2.3 Receive Antenna Section [I1:O4]

This section allows the user to specify all pertinent characteristics about the victim receive antenna, except antenna height. This section is further divided and discussed in the following subsections:

Antenna Pointing [L2]

The list box over [L2] allows the user to specify the directional characteristic of the receive antenna. The following choices are available:

Horiz
Nadir
OMNI

"Horiz" (horizontal) and "Nadir" (vertical, downward[85]) antennas are understood to be pointed, with respect to the local horizon plane, either parallel or perpendicular, respectively. Antenna pointing is not precisely defined due to difficulties in dealing with different types of antennas. Figures B-3 through B-15, which will be explained in the next subsection, are offered to illustrate what is meant by horizontal and nadir pointing and to show the pattern orientation with respect to the local horizon. The fundamental difference between horizontal and nadir pointing is that nadir pointing always assumes the horizontal plane pattern is omni-directional.

"OMNI" indicates an omni-directional pattern in the horizontal and vertical planes. If the user selects "OMNI" the program ignores any indicated beamwidths or antenna patterns and applies the indicated main beam gain to all rings of the full annulus.[86]

Antenna Patterns [K2]

The drop down list over [K2] allows the user to specify any one of the following antenna patterns which are listed in TABLE B-5:

---

[85] All cases of vertical pointing are considered to be nadir, as opposed to possibly zenith, because all UWB devices are assumed to be at or near the surface of the Earth.

[86] This is equivalent to setting the horizontal plane beamwidth to 360 degrees and the vertical plane beamwidth to 180 degrees.

TABLE B-5
UWBRings User Interface Antenna Patterns Selections at Cell K2

Antenna	Definition	Remarks
Const	Constant gain	Allows use of 2-level patterns. Multi-purpose
ITU-R[87]	Directional satellite antenna	Used for radar altimeter directional aircraft antenna
SARSATa	SARSAT uplink	This is a measured pattern
DMEa	DME, aircraft	This is a measured pattern
ATCRBSa	ATCRBS, aircraft	This is a measured pattern
MLSa	MLS, aircraft	This is a measured pattern
ASR	ASR, ground	This is a measured pattern
ARSRb1	ARSR beam 1, ground	This is a measured pattern
ARSRld	ARSR look down beam, ground	This is a measured pattern
ATCRBSg	ATCRBS, ground	This is a measured pattern
DMEg	DME, ground	Not available yet
Parabolic	General purpose parabolic	Used for SARSAT downlink, NEXRAD, FSS, and TDWR
Marine Radar	S-band marine radar	This is a measured pattern
Dipole Array	Textbook equation[88]	2 element dipole used to substitute for DMEg

The vertical plane patterns of most[89] of these antennas appear in Figures B-3 through B-15. In some of the patterns 0° is to the right of the plot, in others it is at the bottom. These differences indicate horizontal and nadir pointing, respectively. All horizontally pointed antenna patterns are graphed with elevation angles set to 0°. With the exception of Const, ITU-R, Parabolic, and Dipole Array, all these patterns were taken from measured data.

The horizontal plane pattern associated with these antennas is taken to be omni-directional for all nadir pointing antennas. Horizontally pointed antennas always have a horizontal beamwidth[90] associated with them to define the horizontal pattern. Figure B-3 has a horizontal beamwidth of 360°, though it could be less.

---

[87] *See* ITU-R S.672-4 Annex 1. This pattern is typically used to model satellite antennas, but could also be used for directional aircraft antennas.

[88] Richard C. Johnson, Antenna Engineering Handbook, at Equation 20-5 (2d ed, 1984).

[89] For this study, ARSRld was not used and DMEg was not available to NTIA.

[90] *See infra* Section B.2.3, at B-16 for discussion on beamwidth.

The "Const" pattern indicates that the gain level is constant within the indicated beamwidth(s). If the user wants to include the antenna sidelobes and backlobes, these values will all be represented by one constant level as specified in [N4].[91] If backlobes are not used all emitters outside the main beam will be rejected. Thus, "Const" indicates that one or two gain levels will be applied related to the specified main beam. The "Const" pattern applies only to "Horiz" and "Nadir" antenna pointing.

The "ITU-R" pattern is a well known ITU antenna radiation pattern which is a function of antenna main beam gain, beamwidth, and off-axis angle. This pattern is actually intended to model directional satellite antennas but could also be used for aircraft. For this study it is used to represent the aircraft radar altimeter antenna pattern.

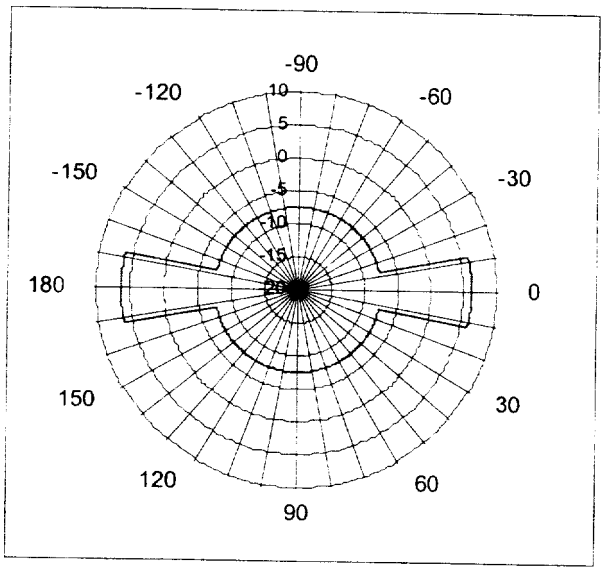

Figure B-3. **Const, Horiz, G=6, hbw=360, vbw=25, use backlobe**

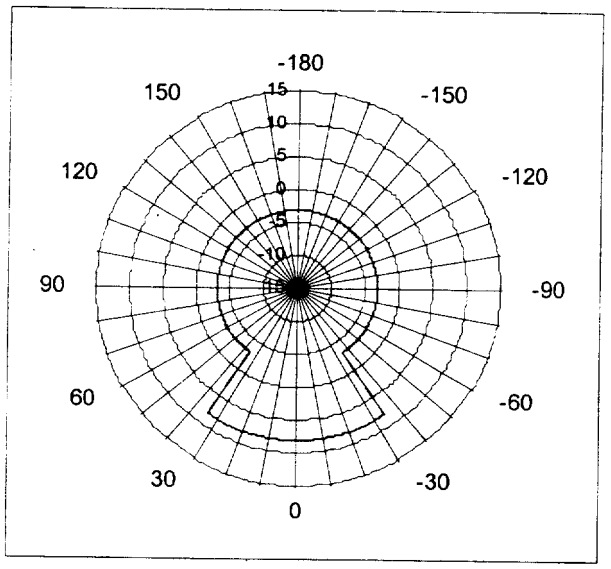

Figure B-4. **Const, Nadir, G=8, vbw=70, use backlobe**

[91] *See Id.* for discussion on backlobes.

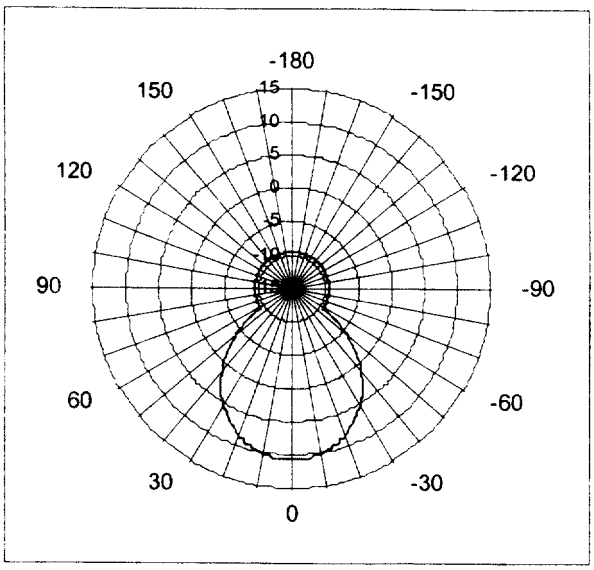

Figure B-5. ITU-R, Altimeter Antenna Pattern.

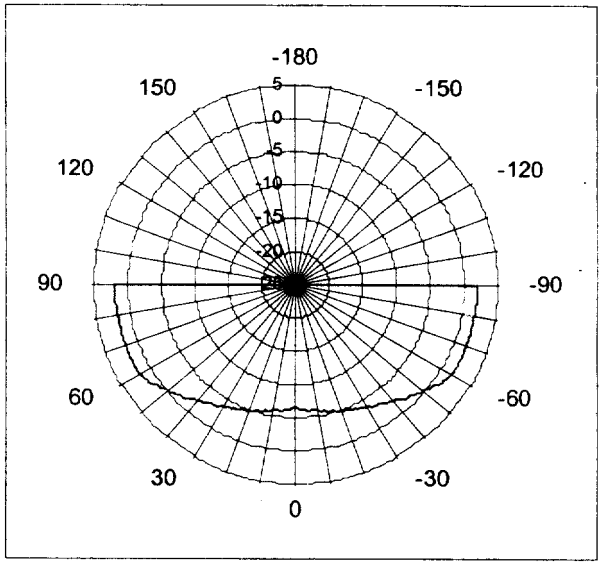

Figure B-6. SARSATa Antenna Pattern.

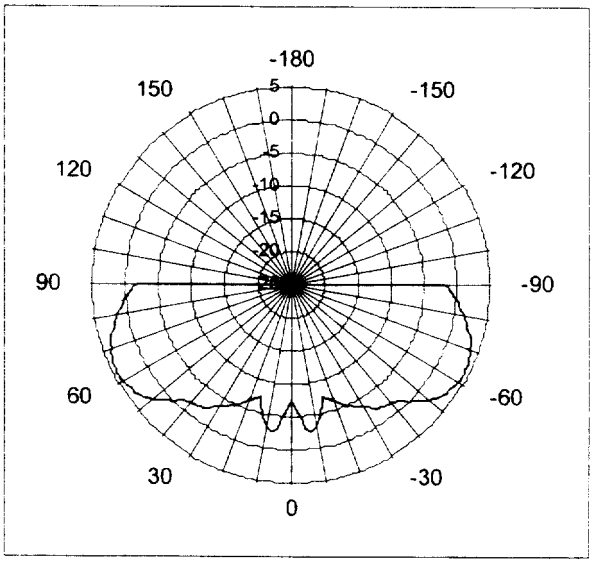

Figure B-7. DMEa Antenna Pattern.

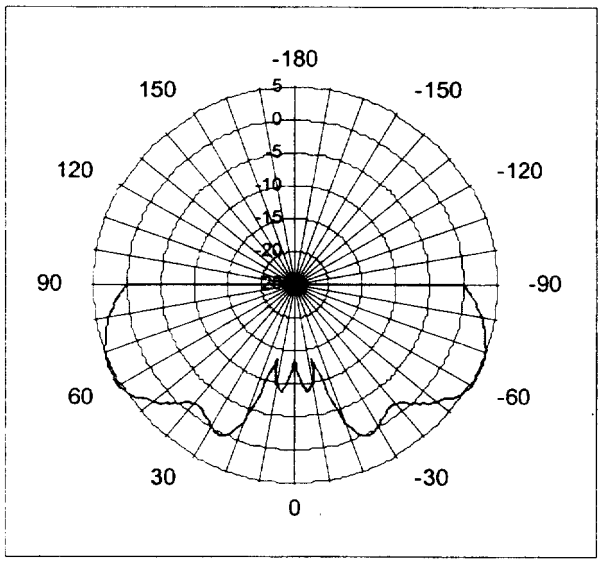

Figure B-8. ATCRBSa Antenna Pattern.

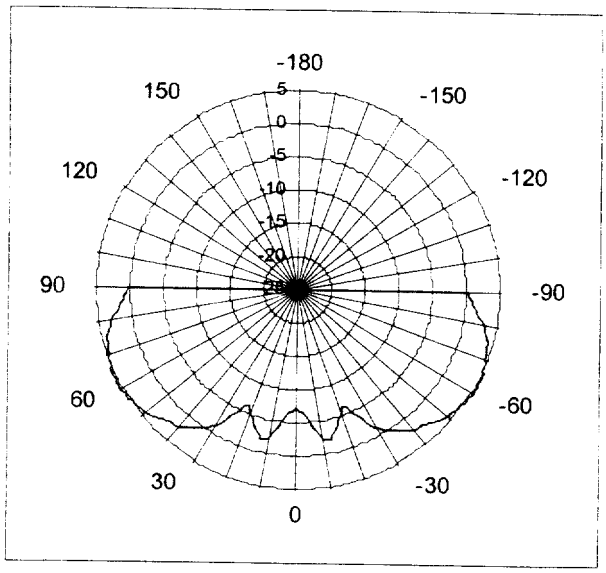

Figure B-9. MLSa Antenna Pattern.

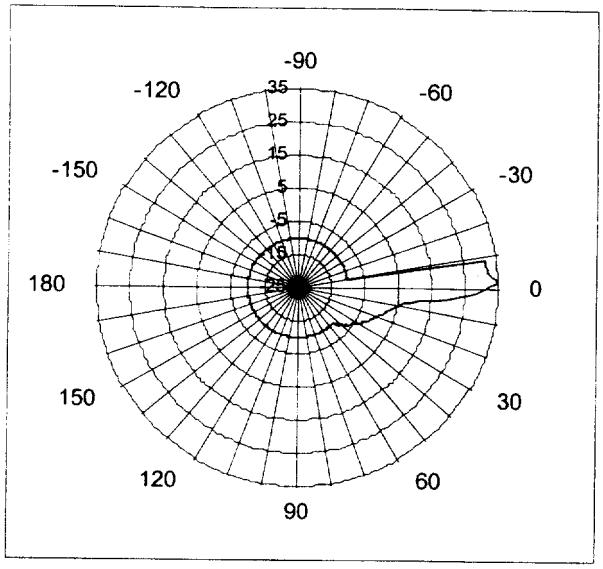

Figure B-10. ASRg Antenna Pattern.

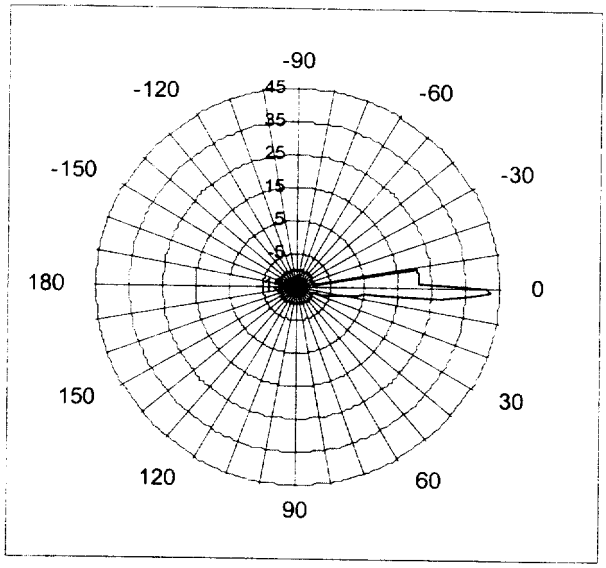

Figure B-11. ARSRb1 Antenna Pattern.

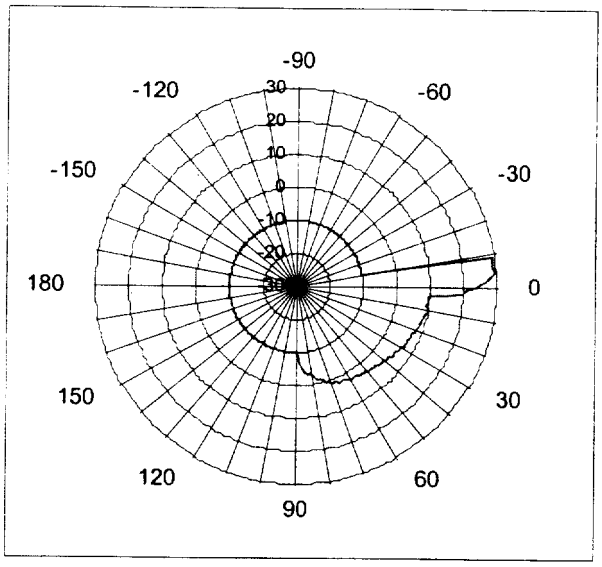

Figure B-12. ATCRBSg Antenna Pattern.

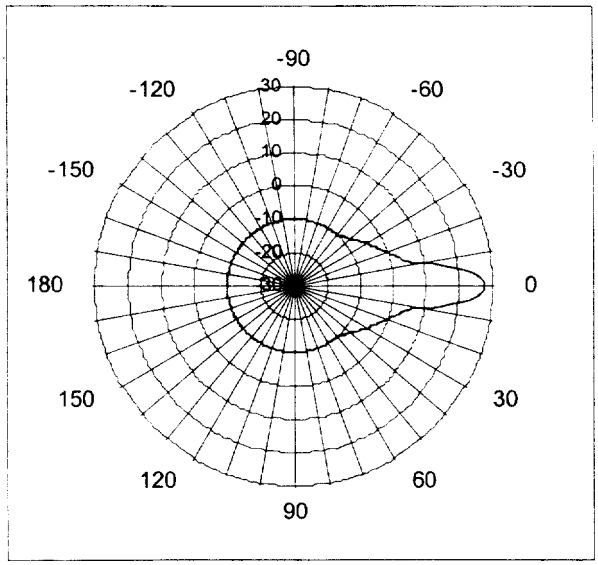

Figure B-13. Parabolic, SARSAT LUT Antenna Pattern.

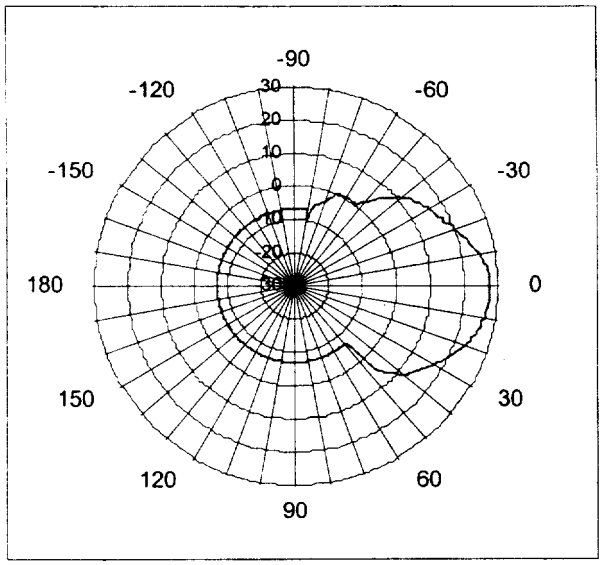

Figure B-14. Marine Radar Antenna Pattern.

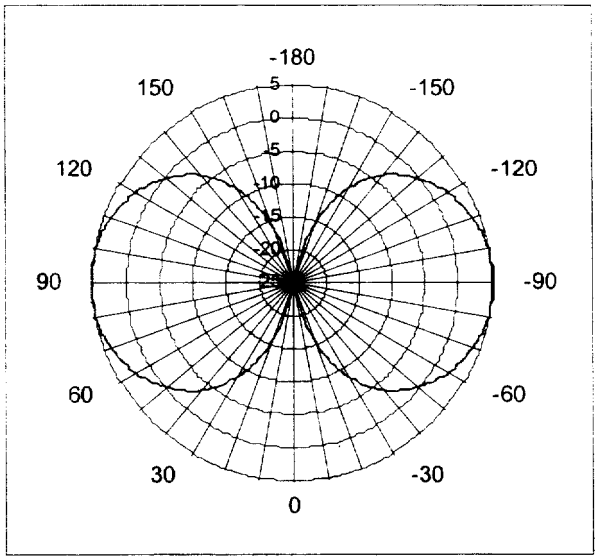

Figure B-15. Dipole Array Antenna Pattern.

Gain [I3:K4]

This subsection is made up of two rows of antenna gains and associated beamwidths. The only purpose of this subsection is to select the main beam gain used by the program. The conversion between gain and beamwidth used in this subsection comes from the original RINGS source code and is offered as a possible aid to the user. The beamwidths which will be used by the program are described in the Beamwidth subsection immediately following.

In the top row [I3:J3] the user specifies the gain [J3] while the spreadsheet calculates a recommended beamwidth [I3]. In the second row the user specifies the beamwidth [I4] while the spreadsheet calculates the recommended gain [J4]. The radio buttons to the right of these rows allow the user to select which gain will be used in the program.

If the user selects one of the measured antenna patterns as described in the Antenna Patterns subsection above, the gain value selected by this subsection is ignored by the program, except that it is used in the titling function of the output chart which is mentioned later in B.2.6.

Beamwidth [L3:M4]

UWBRings uses the concept of both a horizontal plane beamwidth and a vertical plane off-axis angle to describe antenna pattern geometry. The horizontal beamwidth is always used to sector off a portion of the RINGS annulus as described in Section 5.3 and the beginning section of this appendix. This tells the program how many of the emitters implied by the emitter density to include in the aggregate calculation. The program takes this horizontal beamwidth from the user-entered value appearing in [M3], or, in the case of nadir antenna pointing, the program overrides the value in [M3] and assigns a 360° horizontal beamwidth.

In the vertical plane an off-axis angle is used in both "Horiz" and "Nadir" pointing antennas to determine the gain to apply to each ring of the emitter density. That is, an off-axis angle is first determined from the receive antenna to the jth ring. This value is then compared with the selected antenna pattern to find the appropriate gain. For the case of a "Const" pattern this value is compared with the vertical beamwidth indicated in [M4]. For all other antenna patterns this value is input into the computer coded pattern function to produce a gain which is applied to that ring. For the Const, ITU-R, and Parabolic patterns a value is required in [M4]. For all other patterns any value in [M4] is not used except in the output chart titling function.

The way to model an antenna which is omni-directional in the horizontal plane, but has a limited vertical plane beamwidth,[92] is to set the antenna pointing to "Horiz", the antenna pattern to "Const", the horizontal beamwidth in [M3] to 360°, and the vertical beamwidth in [M4] is set as desired (see Figure B-3).

Backlobes [N4:O4]

For a constant gain antenna a conical or a horizontal and vertical beamwidth is used to describe the antenna main beam depending on whether the antenna is pointed at nadir or the horizon, respectively. The only emitters considered to contribute to the aggregate at the victim receiver are those which fall within this main beam. Knowing that a receive antenna actually receives radiation in all directions, the question arises as to whether

[92] As in a VHF repeater.

sidelobe and backlobe contributions could be significant. The purpose for this subsection is to provide a "feel" for the answer.

For simplification this section approximates all gain outside the main beam to a single constant level which is determined according to the following theoretical approach. The first observation made is that although it is most convenient and practical to measure the pattern of an antenna in the receiving mode, it is identical to that of the transmitting mode because of the theorem of reciprocity.[93] Therefore, though the following development considers the transmit mode, it applies equally to the receive pattern.

Consider that the gain of any antenna could be approximated by a piecewise function of power densities over a sphere covering all possible directions of radiation. This approach is depicted by the following equation:

$$\int P_{d1} dS + \int P_{d2} dS + \int P_{d3} dS + \ \ldots \ + \int P_{dn} dS = \eta P \tag{B15}$$

There are n power density functions which are each integrated over the portion of the sphere to which they apply. The sum of these integrals must equal the total radiated power of the source except for various losses, which are represented by an antenna efficiency, η.

If we consider that the antenna pattern over the sphere is represented by only two power density functions we arrive at the following equation after substitution.

$$\int \frac{PG_m}{4\pi r^2} dS + \int \frac{PG_b}{4\pi r^2} dS = \eta P \tag{B16}$$

In this equation G_m represents the main beam gain, and G_b represents the gain of everything on the sphere outside of the main beam. Since there could be two different descriptions of the main beam depending on whether a conical beam is used, or a horizontal and vertical beamwidth, we consider the following two applications of this equation.

Conical:

$$\int_0^{2\pi} \int_0^{\frac{\phi_3}{2}} \frac{PG_m r^2 \sin\phi}{4\pi r^2} d\phi d\theta + \int_0^{2\pi} \int_{\frac{\phi_3}{2}}^{\pi} \frac{PG_b r^2 \sin\phi}{4\pi r^2} d\phi d\theta = \eta P \tag{B17}$$

[93] Constantine A. Balanis, "Antenna Theory, at 97 (Wiley & Sons 1982).

Horizontal/Vertical:

$$\int_0^{\theta_3}\int_{-\frac{\phi_3}{2}}^{\frac{\phi_3}{2}}\frac{PG_m r^2\cos\phi}{4\pi r^2}d\phi d\theta+\int_0^{\theta_3}\int_{-\frac{\pi}{2}}^{-\frac{\phi_3}{2}}\frac{PG_b r^2\cos\phi}{4\pi r^2}d\phi d\theta+$$

$$\int_0^{\theta_3}\int_{\frac{\phi_3}{2}}^{\frac{\pi}{2}}\frac{PG_b r^2\cos\phi}{4\pi r^2}d\phi d\theta+\int_{\theta_3}^{2\pi}\int_{-\frac{\pi}{2}}^{\frac{\pi}{2}}\frac{PG_b r^2\cos\phi}{4\pi r^2}d\phi d\theta=\eta P \qquad \text{(B18)}$$

In both cases the angle θ is in the horizontal plane and ϕ is in the vertical plane. Correspondingly, θ_3 represents the full horizontal beamwidth and ϕ_3 represents the full beamwidth in the vertical plane.

Since we are considering that G_m and G_b are both independent of position on the sphere, the solution to both of these equations is trivial. Both are modeled in cell [N4] of the spreadsheet (with η set to 100 percent) when Pattern is set to "Const". The equation for Conical is implemented, using the beamwidth in cell [M4], when Ant Pointing is set to "Nadir". The equation for Horizontal/Vertical is implemented, using beamwidth values in both [M3] and [M4], when Ant Pointing is set to "Horiz". The backlobe in [N4] is used in the simulation when the "backlobe" check box over [O4] is checked. A value of "#NUM!" in [N4] indicates an unrealistic beamwidth which is too wide, for the selected gain, to allow any energy in the backlobe.

Antenna Polarization [N2]

This subsection was added when using the TIREM path loss model because it was discovered that the polarization used made a slight difference in calculated aggregate power for receive antenna heights under 100 meters. The only choices offered by TIREM for antenna polarization are vertical and horizontal, which are the "V" and "H" radio buttons, respectively, in this subsection. As it turns out, this is also compatible with ITM, so the selection in this subsection would also apply if the user selects the ITM path loss.

Antenna Elevation Angle [O2]

Any time the program looks for a receive antenna elevation angle, it takes that value from [O2]. UWBRings then takes this value and adds it to the calculated off-axis angle, which is compatible with all the ground-based antenna pattern functions used. Just to note, positive elevation angles are defined by the program to be above the local horizontal. Positive off-axis angles are defined to be below the local horizontal.

B.2.4 General Section [D5:O8]

This section contains several miscellaneous inputs and controls which are described in the following subsections.

Calculate button [D6:E6]

As mentioned previously, the "Calculate" button, which appears over [D6:E6], is the control which activates the Visual Basic© routines used to update the data points in [G24:J28][94] and format the associated chart. It was determined that the best way to structure the program for robustness and clarity was to separate the input gathering and calculations from the output data point calculations. This was due primarily to calculation order errors which occur across a worksheet page each time the spreadsheet recalculates. The idea is to separate the much faster input calculations from the much slower data point calculations. An added bonus to this structure is that the overall program speed is greatly enhanced because now the typically numerous input adjustments will not each trigger recalculation of all data point cells.

Mode drop-down list [F6]

The Mode control allows the user to select either the criteria calculated in the output chart, or the maximum allowable EIRP calculated based on the specified Criteria. List options include the following:

I/N
S/I
S/(I+N)
EIRP[I/N]
EIRP[S/I]
EIRP[S/(I+N)]

Criterion [F7]

If the user selects any of the EIRP modes in the Mode list just described, the program looks in [F7] to find the associated criterion threshold. Thus, if the user selects the EIRP[I/N] mode, the threshold entered in [F7] will be interpreted to be an I/N criterion. The user-entered threshold is understood by the program to be in decibels.

Parameterize drop-down list [G6:H6]

The intention of this list box is to allow the user to plot more than one curve on the output chart at the same time. The additional curves are a function of the parameter which appears in this control. List options include the following:

Altitude
NF
Smin

[94] Described in the Data Points section (B.2.7).

Whichever of these parameters the user chooses to vary, the program looks in the 23rd row starting at the leftmost cell [G23] to find these parameter values. Although in most cases only 4 variations of the parameter are listed (out to [J23]), the program will actually continue reading cells to the right until it finds an empty cell. Thus, the user can calculate the data points of several more curves. They can subsequently be plotted by highlighting the additional data points, making sure to include the associated parameter value in the 23rd row, and dragging and releasing anywhere in the chart area.

Iagg+Isingle check box [D7:E7]

The purpose of this control is to allow the user to ensure a worst case aggregate interference calculation. Under low emitter density and low receive antenna height the RINGS topology may assign less than a single emitter to the innermost ring(s). In such cases it is possible that the entire aggregate power level (Iagg) may be less than the power received by a single emitter placed on the worst case ring [95] (Isingle). Selecting this check box causes the program to check for this condition. If, and only if, it finds this to be the case, the program increases the aggregate power by the worst case single emitter power. Hence the name "Iagg+Isingle".

MxSnglEirp [G7] and @R(km) [H7]

If the user selects any of the EIRP modes and checks the "Iagg+Isingle" check box, the program writes values in these two cells. Into [G7] it writes the maximum allowable EIRP (to keep from exceeding the criterion threshold) for a single emitter calculated from the worst case ring.[96] Into [H7] it writes the value of that worst case ring radius. These values were added to ensure that the aggregate portion of the study agrees with the single emitter portion (Section 4).

h(km) [I6]

The program variable assigned to the victim receive antenna height is "h". In the Parameterize list box this same variable is called "Altitude".[97] In those cases where the user has not elected to vary the altitude parameter, the program takes the receive antenna height from [I6]. The value entered is assumed to be in kilometers.

tranht(m) [I7]

Any time the program looks for a UWB transmitter height it takes it from [I7]. As previously mentioned, all emitters are assumed to be at this same height above average terrain. The user-entered value in [I7] is assumed to be in meters.

NF(dB) [J6]

When the program looks for a system NF it takes it from [J6]. The value is understood to be in decibels. If the system noise is listed as a noise temperature (T_s) it can

---

[95] This is defined to be the ring from which a single UWB emitter produces the highest interfering power level at the receiver.

[96] Due to the use of shaped beam antenna patterns, the worst case ring may not be the innermost one.

[97] Indicating a relative altitude with respect to the average terrain height.

be converted to work in this cell through the use of $10\log(T_s/T_o)$. For example, if the noise temperature is 650 K, enter the following (less the quotation marks) in [J6]:

"=10*log((650)/290)"

N(dBm/MHz) [J7]

This cell contains a formula to convert the NF in [J6] to a noise density in dBm/MHz. It is provided for the user's information and can be used for such useful things as determining the actual aggregate interference levels calculated in the data point cells. The easiest way to do this is directly on the spreadsheet. Several of the free cells surrounding the data points are available as a sort of "scratch pad" for the user to enter custom formulas. To determine the exact aggregate interference calculated for any data point cell, say [H27], simply perform an I/N analysis, find a free cell and enter the following formula (less the quotation marks):

"=H27+J7"

System Losses [K6]

System losses are only used for I/N and S/(I+N) cases since for the S/I case losses cancel each other. Some call these losses "insertion" losses. The user-entered value placed in [K6] is understood by the program to include losses from immediately after the receive antenna to the receiver input.

Smin [L6]

Smin is the minimum desired received signal level at the receiver stage where S/I or S/(I+N) is determined. The power level entered here should be in dBm/Bif(MHz).

Bif [L7]

Bif is the IF bandwidth (in MHz) of the receiver.

Iother [M6]* and *Iother check box [N6]

NTIA recognizes that it is inappropriate for any one service to feel they have the rights to all the excess of a protected service's link budget. The excess is defined to be the difference between the calculated criteria using the expected signal levels, and the minimum specified threshold to achieve the standard of reception required. In fact, when a service defines its interference threshold, it intends to include the cumulative affect of all possible interferers. Iother was added to allow the user to get a "feel" for the affects of potential interference from other services. The user enters a value in [M6] in dBm/MHz which is understood to be the Iother signal level immediately after the receive antenna. This value is added to the aggregate power levels calculated only if the Iother check box is checked.

Ring Spacing [O6]

The drop down list over [O6] gives the user the option of choosing amongst different Δ spacings as described earlier in this appendix. Options are the following:

Original
Improved
10 meter

The "Original" rings spacing algorithm is the implementation of (B3) followed by (B4) where M is subsequently rounded to an integer, if necessary. The "Improved" algorithm differs from the Original in that it always rounds M up, and follows by recalculating Δ using $\Delta = (R_O - R_I)/(M - 1)$. The effect of this improved algorithm is that all of the subsequently calculated N_j terms add up to exactly N as specified by (B7). The "10 meter" algorithm acts just like the Improved one except that it always uses K = 1,0000 in (B3).

Make trace file? [N7]

This check box gives the option to create a text file of the variables calculated for each ring in a given aggregate calculation. The radio buttons of the Data Points Section (see B.2.7) are used to select the cell for which the user wished to monitor variable development. This feature is added to ensure the integrity of the program. The file, called "trace.txt", is saved in the MS Excel© default file location directory. A macro called "ReadTrace" is included to open the file as a spreadsheet, thereby facilitating further data processing at the user's discretion. This macro can be run through the <Ctrl> + R keystroke combination.

B.2.5 Radar Altimeter Section [N9:O19]

This section contains inputs used to calculate the desired received signal level for a radar altimeter. It was added due to the fact that radar altimeters were chosen as one of NTIA's target systems for this study, that the FAA lists altimeter protection criteria in terms of the desired received signal level, and that peculiarities of the link based upon the reflection at the Earth's surface requires implementation of a specialized algorithm to improve accuracy of predicted received signal level at the aircraft. That specialized algorithm is documented in an RTCA publication[98] called "Minimum Performance Standards Airborne Low-Range Radar Altimeters". This document indicates that desired signal level is a function of the frequency of the emission, whether the altimeter uses CW or pulsed emissions, the pulse width (for pulsed emission type), the transmit power, the transmit and receive antenna gains and beamwidths (assumed to be identical), the distance along the aircraft fuselage between transmit and receive antennas, the aircraft altitude, and the unit scattering radar cross section of the ground.

TABLE B-6 below indicates the final[99] inputs from the user interface where each of these parameters are taken: The scattering radar cross section does not appear in the

[98] Radio Technical Commission for Aeronautics Document, RTCA DO-155, prepared by RTCA ICG-2 (Nov. 1974).

[99] These input locations are not necessarily user-typed, but could be calculated or determined by another control.

table because the documentation suggests using a constant value of 0.006[100] as a reliable representative of a wide variety of terrain and aircraft pitch and roll maneuvers.

When the "Use Altimeter Smin?" check box over [N20] is checked, the calculated received power appears in cell [O18]. This same value will be used in a S/(I+N) program simulation which varies the NF parameter. Otherwise, if the simulation is varying the receive antenna altitude parameter, this same radar altimeter received signal level function appears in the cells [G22:J22] which are directly above the cells containing the aircraft altitudes they use. If you are performing either a S/I or S(I+N) simulation, the range [G22:J22] is where the Smin values will come from. Though you are varying the altitude parameter, yet because Smin depends on altitude, the simulation will use a different Smin for each altitude curve plotted.

TABLE B-6

Description	Cell Location in UWBRings
Frequency of the emission	[B5]
Is the altimeter CW or pulsed?	[O13:O15] (radio buttons)
Pulse width	[O16]
Transmit power	[O9]
Antenna gain	[J3] or [J4][101]
Antenna beamwidth	[M4]
Distance between antennas	[O11]
Aircraft altitude	[I6] or [G23:J23][102]

B.2.6 Chart Section [D9:M22]

UWBRings was written in MS Excel© because of the built-in charting features. Additionally, the underlying Visual Basic© interface lends itself to automating the creation and formatting of titles[103] and chart legend, as well as the formatting and scaling of chart axes. The chart can be copied and pasted easily into any Windows© compatible program. The legend to the right lists the parameter which is varied to create the multiple curves. In the example shown in Figure B-2 the chart legend shows that the curves differ in "h(km)", which is the receive antenna height.

---

[100] Valid as long as all distances in the external loop loss equation of the RTCA documentation are in feet.

[101] As described in the Gain subsection of the Receive Antenna section.

[102] See B.2.7 (the Data Points section).

[103] See Section 5.5 for more information on automatic chart titling.

B.2.7 Data Points Section [E23:J29]

The chart takes its emitter density values from the spreadsheet column [F24:F28]. The values span 4 orders of magnitude from a single active emitter per square kilometer because this was thought to be enough to cover all practical ranges of emitter densities. Though it is unlikely that the user would want to use different values than these, it is possible to change them simply by writing over them.

The parametric values for the chart are taken from the row beginning at [G23] and extending to the right. According to the user selection in the Parameterize list (previously described in the General section) the program interprets the values in this row to be either receiver antenna heights (in km), NF (in dB), or desired received signal levels (in dBm/MHz). The chart legend reads these values and displays the points in the data point columns directly beneath as curves on the chart.

The data points upon which the chart curves are based are located in the cell block beginning with [G24]. The other end of the cell block diagonal is usually at [J28], however, provision is made to extend the number of curves plotted per chart by extending the parametric values row up to several cells beyond [J23]. Thus, if the user wanted to plot three additional curves this could be accomplished simply by entering appropriate values in [K23:M23]. After clicking the "Calculate" button, data point values would appear in the cells directly beneath the added parametric values. These values could then be plotted manually by using well known MS Excel© charting techniques.

The radio buttons appearing across [G29:J29], and those over [E24:E28], have no affect at all on the data points. They are added as an aid to the user to control program written values which appear in [G7:H7], the spreadsheet calculated value which appears in [O18], and which data points cell is traced when using "Make trace file?". Specifically, both sets of radio buttons are used to identify a specific cell amongst the data points.[104] The "MxSnglEirp" and "@R(km)" values previously discussed in the General section will be based on the selected cell. Additionally, in the Radar Altimeter section of the spreadsheet, the received signal level which appears in [O18] is based upon the receive antenna height identified by the [G29:J29] row of radio buttons when the corresponding parametric values of [G23:J23] represent antenna heights.

B.3 SAMPLE DATA

This subsection shows how the model was used for two of the systems analyzed in this report. The following two figures show the UWBRings user interface for each of these scenarios. The corresponding parameter tables of Appendix A were used to fill various input cells. To avoid confusion the input cells which were not used in the

[104] Through the intersection of the row identified by the [E24:E28] radio buttons, and the column identified by the [G29:J29] buttons.

scenarios were left blank, although it would not affect the simulation if they had contained stray data.

The first system considered is the ATCRBS Ground Interrogator whose parameters appear in TABLE A-5. Figure B-16 shows how to model this scenario using UWBRings. This receiver uses a fan-type antenna pattern with a narrow horizontal beamwidth (1.5°) and a wider vertical beamwidth (4.7°). The horizontal beamwidth is entered in [M3] and is used by the program to eliminate all but a 1.5° sector of emitters from the aggregate calculation. Thus, the program makes an approximation by not considering any sidelobe contributions in the horizontal plane. In the vertical plane the measured data of the ATCRBSg antenna pattern is used to assign a gain level to each ring of the emitter distribution. In this case it is unnecessary to list a vertical beamwidth in [M4] because this information is built into the gain pattern.

Figure B-16 shows that a 2° antenna elevation tilt angle was used.

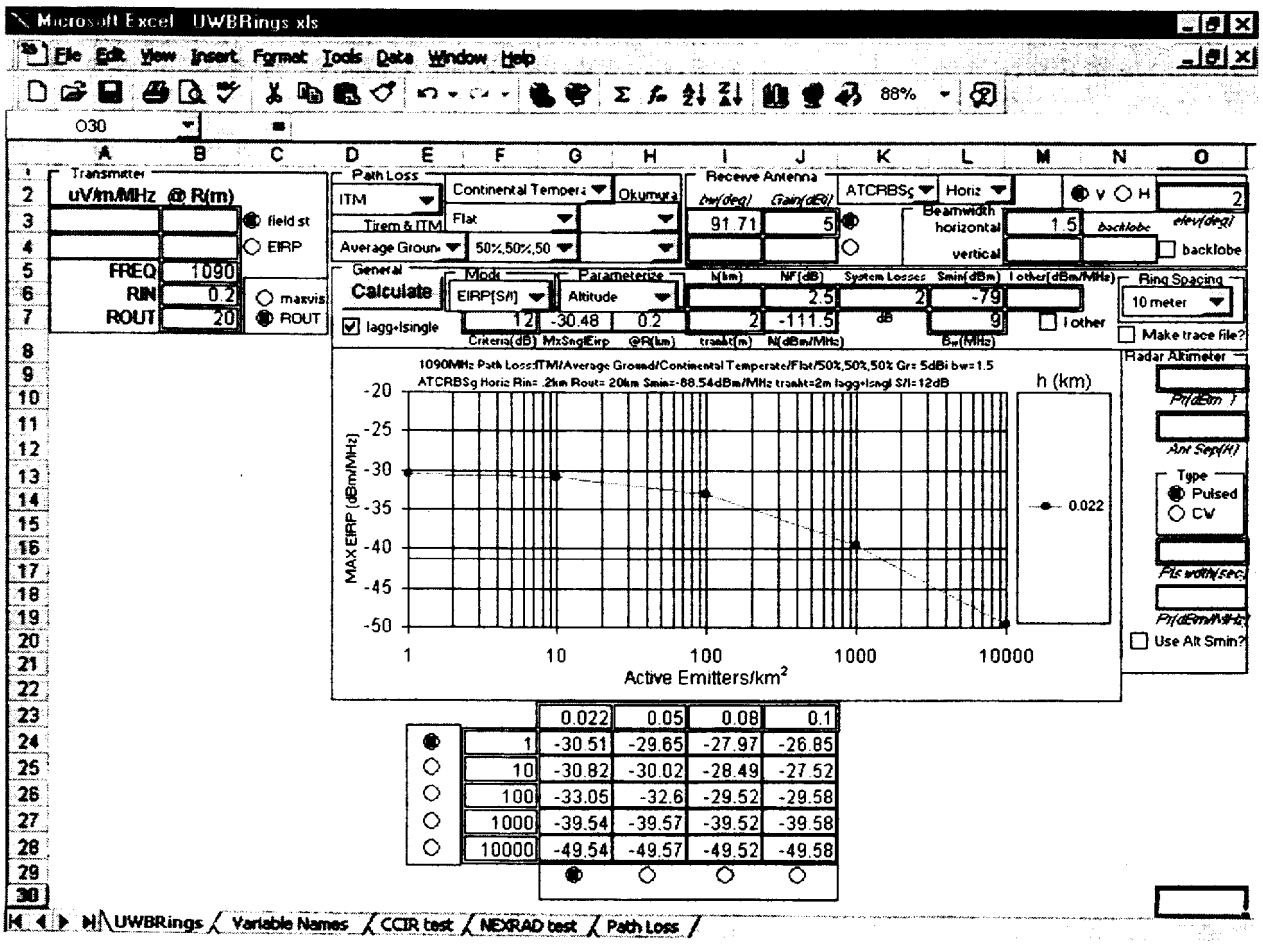

Figure B-16. ATCRBS Ground Interrogator

The Iagg+Isingle check box is selected, which accounts for the fact that the output curve stays relatively flat for the lower emitter densities. This also signals the program to mark the ring from which the strongest interfering signal is received. The EIRP value for a single emitter placed at that ring, which will meet the S/I = 12 dB threshold, appears in [G7]. As expected, the curve value at 1 emitter/km^2, which appears in [G24], is less than the value in [G7]. In this case, because the receive antenna height is small, there is not much difference between [G7] and [G24].

One more point is that the chart title has converted Smin to a PSD with respect to 1 MHz. TABLE A-5 lists Smin as -79 dBm in a 9 MHz bandwidth. Whenever the program uses Smin it always converts to PSD in dBm/MHz to make it compatible with the UWB EIRP reference level.

The next system to consider is the ATCRBS airborne transponder, whose parameters appear in TABLE A-6. Figure B-17 shows the corresponding UWBRings scenario. In this case the receive antenna is pointed at nadir. For all nadir pointing antennas the program assumes the horizontal antenna pattern is omni-directional. Thus, all emitters determined using (B1) will be contributing to the aggregate. In the vertical plane the measured data of the ATCRBSa antenna pattern is used to apply a gain to each ring in the distribution. The value appearing in [M4] is the conical vertical plane beamwidth and is used only for the automatic chart titling function. It does not affect the gain calculation in this case because that information is built into the ATCRBSa gain pattern.

Because the Iagg+Isingle check box is deselected it is expected that all curves would follow a -10dB/decade slope. However, it is evident that none of the curves quite comply. One can visibly see that the 10 meter altitude curve veers from the expected slope below 1,000 emitters/km^2. But upon closer examination of the data points in [J24:J28], it is seen that even the 12.2 km[105] curve does not follow a -10dB/decade slope below 100 emitters/km^2. The reason for this discrepancy is a resolution problem that arises when using the Original or Improved Ring Spacing algorithms.[106] These algorithms use a wider ring spacing for lower emitter densities which cannot track the vertical antenna pattern closely enough. This explanation is easily verified by switching to the 10 meter Ring Spacing algorithm, which shows the same values at 10,000 emitters/km^2 and alters values at other densities to provide the expected slope for each curve.

The -41.3 dBm/MHz reference level appears on the output charts of Figures B-16 and B-17.

---

[105] Equates to 40,000 feet

[106] See the Ring Spacing subsection in B.2.4, as well as the paragraph between (B4) and (B5), and paragraphs between (B12) and (B13), for more information.

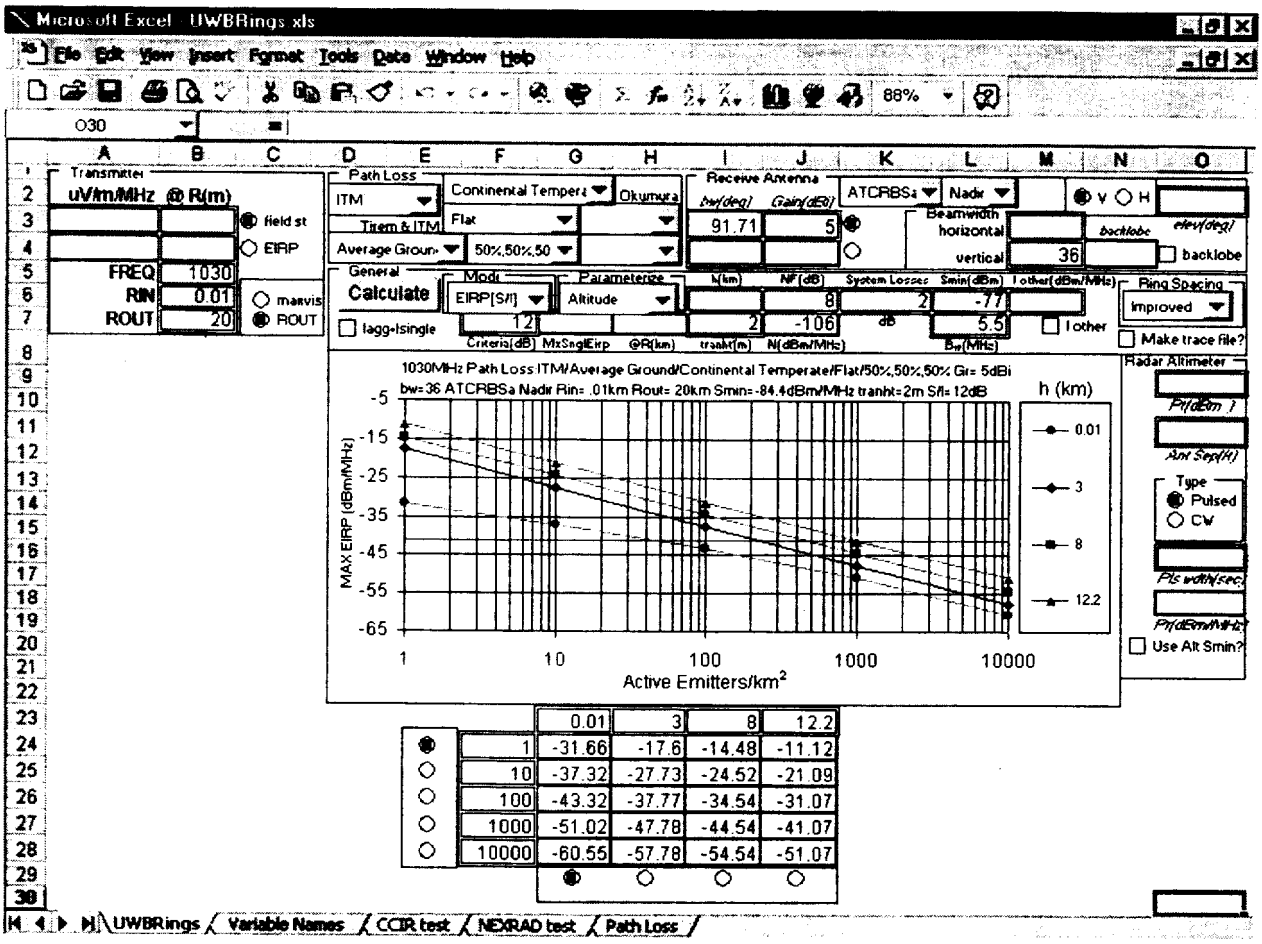

	0.01	3	8	12.2
1	-31.66	-17.6	-14.48	-11.12
10	-37.32	-27.73	-24.52	-21.09
100	-43.32	-37.77	-34.54	-31.07
1000	-51.02	-47.78	-44.54	-41.07
10000	-60.55	-57.78	-54.54	-51.07

Figure B-17. ATCRBS Airborne Transponder