UCI

1453 Beulah Road
Vienna, VA 22182
Tel: (703) 759-4518 Fax: (703) 757-5313 e-mail: barrett506@aol.com

DOCKET FILE COPY ORIGINAL

RECEIVED

JUL 06 2000

FCC MAIL ROOM

3rd July 2000

Secretary of the FCC
Federal Communications Commission
Docket 98-153
445 12th Street SW
Washington, D.C. 20554

Reference: Docket 98-153

Dear Sir:

I wish to submit the paper "History of UltraWideBand (UWB) Radar & Communications: Pioneers and Innovators" presented at the Progress in Electromagnetics Research Symposium 2000 (PIERS2000) in Cambridge, MA, July, in connection with Docket 98-153.

Sincerely yours,

Terence W. Barrett, Ph.D.

No. of Copies rec'd 0
List A B C D E

Progress In Electromagnetics Symposium 2000 (PIERS2000), Cambridge, MA, July, 2000

History of UltraWideBand (UWB) Radar & Communications: Pioneers and Innovators

Terence W. Barrett
UCI
1453 Beulah Road
Vienna, VA 22182 USA

RECEIVED
JUL 0 6 2000
FCC MAIL ROOM

Contents

1.0 Introduction
2.0 Major Components of a UWB Radio System
3.0 Detection & Amplification
4.0 The Tektronix System (1975)
5.0 Harmuth Systems
6.0 Ross & Robbins Systems
7.0 Russian Systems
8.0 Summary Observations
9.0 References

1.0 Introduction

The term: UltraWideBand or UWB signal has come to signify a number of synonymous terms such as: impulse, carrier-free, baseband, time domain, nonsinusoidal, orthogonal function and large-relative-bandwidth radio/radar signals. Here, we use the term "UWB" to include all of these. (The term "ultrawideband", which is somewhat of a misnomer, was not applied to these systems until about 1989, apparently by the US Department of Defense). Contributions to the development of a field addressing UWB RF signals commenced in the late 1960's with the pioneering contributions of Harmuth at Catholic University of America, Ross and Robbins at Sperry Rand Corporation, Paul van Etten at the USAF's Rome Air Development Center and in Russia. The Harmuth books and published papers, 1969-1984, placed in the public domain the basic design for UWB transmitters and receivers. At approximately the same time and independently, the Ross and Robbins (R&R) patents, 1972-1987, pioneered the use of UWB signals in a number of application areas, including communications and radar and also using coding schemes. Ross' US Patent 3,728,632 dated 17th April, 1973, is a landmark patent in UWB communications. Both Harmuth and R&R applied the 50 year old concept of matched filtering to UWB systems. Van Etten's empirical testing of UWB radar systems resulted in the development of system design and antenna concepts (Van Etten, 1977). In 1974 Morey designed a UWB radar system for penetrating the ground, which was to become a commercial success at Geophysical Survey Systems, Inc. (GSSI). Other subsurface UWB radar designs followed (e.g., Moffat & Puskar, 1976). The development of sample and hold receivers (mainly for oscilloscopes) commercially in the late 1960s, e.g., at Tektronix Inc., was also, unwittingly, to aid the developing UWB field. For example, the Tektronix Time Domain Receiver plug-in, model 7S12, utilized a technique which enabled UWB signal averaging - the sampling circuit is a transmission gate followed by a

short-term integrator (Tektronix, 1968). Other advances in the development of the sampling oscilloscope were made at the Hewlett Packard Company. These approaches were imported to UWB designs. Commencing in 1964, both Hewlett Packard and Tektronix produced the first time domain instruments for diagnostics. In the 1960s both Lawrence Livermore National Laboratory (LLNL) and Los Alamos National Laboratory (LANL) performed original research on pulse transmitters, receivers and antennas. Cook & Bernfeld's book (1967) summarized developments in pulse compression, matched filtering and correlation techniques which had begun in 1952 at the Sperry Gyroscope Company. In the 1970s LLNL expanded its laser-based diagnostics research into pulse diagnostics. Russian developments of this time are described below.

Thus, by the early 1970s the basic designs for UWB signal systems were available and there remained no major impediment to progress in perfecting such systems. In fact, as is shown below, by 1975 a UWB system – for communications or radar – could be constructed from components purchased from Tektronix. After the 1970s, the only innovations in the UWB field could come from improvements in particular instantiations of subsystems, but not in the overall system concept itself, nor even in the overall subsystems' concepts. The basic components were known, e.g., pulse train generators, pulse train modulators, switching pulse train generators, detection receivers and wideband antennas. Moreover, particular instantiations of the subcomponents and methodologies were also known, e.g., avalanche transistor switches, light responsive switches, use of "subcarriers" in coding pulse trains, leading edge detectors, ring demodulators, monostable multivibrator detectors, integration and averaging matched filters, template signal match detectors, correlation detectors, signal integrators, synchronous detectors and antennas driven by stepped amplitude input.

In 1978 Bennett & Ross summarized the known pulse generation methods. Since that time there have been numerous sessions at various conferences, at *Society for Photo-Optical Instrumentation Engineers* (SPIE) meetings, at meetings held by LANL, by Polytechnic University, Brooklyn, and at other national meetings, where the many approaches to pulse generation techniques have been, and, continue to be, discussed.

During the period, 1977-1989, the USAF had a program in UWB system development headed by Col. J.D. Taylor. By 1988 the present author was able to organize a UWB workshop for the US Department of Defense's DDR&E attended by over 100 participants (Barrett, 1988). At this time, there was already substantial progress in UWB in the former Soviet Union/Russian Federation[1] and China[2], which paralleled the progress in the US. There were also very active academic programs (e.g., at LLNL, LANL, University of Michigan, University of Rochester and Polytechnic University, Brooklyn) which focused on the interesting physics of short pulse transmissions that differed from the physics of continuous or long pulse signals, especially with respect to interactions with matter[3].

---

[1] cf. Chernousov, 1965a,b, 1969; Glebovich *et al*, 1984; Varganov *et al*, 1985; Meleshko, 1987; Astanin & Kostylev, 1989, 1992, 1997; Astanin et al, 1994; Stryukov et al, 1989; Zernov, 1991a,b; Sodin, 1991, 1992; Immoreev, 1991, 1997, 1998; Immoreev & Zivlin, 1992; Immoreev & Teliatnikov, 1997; Immoreev & Fedotov, 1998; Osipov, 1995; Krymscy et al, 1995; Bunkin et al, 1995; Efanov et al, 1997; Kardo-Sysoev, 1997.

[2] cf. Harmuth (1981), pp. 388-9.

[3] cf. Miller, 1986; Barrett, 1991; Barrett, 1995a, Bertoni et al, 1993; Carin & Felsen, 1995; Baum et al, 1997; Heyman & Mandelbaum, 1999.

Commencing with a conference held at W.J. Schafer Associates (Barrett, 1988) and one at LANL in 1990 (Noel, 1991), there have been numerous meetings held on impulse radar/radio – e.g., at the SPIE (e.g., Lahaie, 1992) and at the Polytechnic University, Brooklyn (Bertoni et al, 1993; Carin & Felsen, 1995; Baum et al, 1997; Heyman & Mandelbaum, 1999), as well as numerous books on the subject – e.g.: (Harmuth, 1969-90; Astanin et al, 1994, 1997; Taylor, 1995).

In 1994, T.E. McEwan, then at LLNL, invented the *Micropower Impulse Radar* (MIR) which provided for the first time a UWB operating at ultralow power, besides being extremely compact and inexpensive (McEwan, 1994, 2000). This was the first UWB radar to operate on only microwatts of battery drain. The methods of reception of this design also permitted for the first time extremely sensitive signal detection.

The methods of data encoding in UWB communications systems were introduced decades ago. For example, Sobol provides an historical perspective on microwave communications and on the data encoding technique of *pulse-position modulation*, which is often used in UWB communications. He wrote that in 1943 the U.S. Army approached AT&T to develop a microwave radio system (p. 1174). "A similar system was under development by the British, and early models were successfully used by them in the North African campaign. The first prototypes of the U.S. Army radio, the AN/TRC/6, were completed at the end of 1943, and production started shortly thereafter.... The AN/TRC-6 (Black et al, 1946) was a pulse-position modulation system that provided eight duplex voice channels through time division multiplexing and operated at 4.5 GHz." (Sobel, 1984).

There are even patents that antedate the UWB developments of the 1970s. In 1954 De Rosa obtained a patent for an early impulse (UWB) system, having filed for the patent in 1942. Also, Hoeppner (1961) patented a representation of a pulsed communications system. As in current UWB systems, Hoeppner's requires pulse detector timing circuitry, even if the pulses have a higher duty cycle than later-proposed UWB systems. The essential elements of an impulse radio transmission system were known even at this time.

By 1975 it was possible to build a UWB system from purchased Tektronix parts (see below) and in 1978 Bennett & Ross published the schematics for a UWB radar system (Fig. 1.1). After the 1970s the emphasis swung to developing particular instantiations of the known technology, and understanding the implications of transmitting transient pulses in a world dependent on non-interfering RF communications and sensing. Moreover, although UWB systems employ a homodyne receiver approach (cf. Barrett, 1995b) – as opposed to a heterodyne approach (superheterodyne receiver – inventor: E.H. Armstrong, 1918) – UWB systems remain confined by, and do not escape from, the usual engineering tradeoffs of time, bandwidth, signal-to-noise ratio and electronic complexity.

The UWB approach to radar and communications is – if not a shift in paradigm – at least a shift in emphasis with respect to use of the available time-bandwidth-power product. Fig 1.0.1 illustrates one aspect of this shift for communications applications. (The fundamental emission[4] is not represented here.) In *A*, the box depicts the product of

[4] The fundamental emission according to FCC (2000, p. 3) is the main lobe when viewed on a spectrum analyzer and the sidelobes are not considered, or $2/\tau$, where τ is the pulse temporal length. It can be the resonant frequency of the transmitting antenna used which determines the center frequency (see note 4 below) of the radiated pulse (FCC (2000, p. 2).

(individual pulse or symbol) bandwidth[5], duration and peak power (expressed as S/N[6]). As the signal duration decreases, the bandwidth increases and the *S/N per frequency*[7] decreases. Moreover, the S/N per frequency decreases below the threshold of frequency selective receivers, which is a major argument made by UWB proponents that UWB systems are able to operate in the presence of frequency selective receivers without interference. The methods used to reliably receive a UWB signal with such low S/N per frequency are shown in *B*. They are: (1) a high sampling rate receiver to capture in a non-synchronous (homodyne) fashion all the signal energy in a minimum number of sampling bins, summing across all the contemporaneous signal bandwidth – which implies a receiver front-end open to that instantaneous ultra-widebandwidth and thus also open to noise; or (2) signal averaging or matched filtering – which lowers the data rate; or (3) counteracting the low power per frequency by increasing to high signal transmit power – which implies interference to other receivers, synchronous or otherwise. In other words, engineering tradeoffs still apply. Each advantage offered by UWB is offset by a disadvantage, the cure for which is another disadvantage. Engineering goals remain balanced optimization.

Essentially, a UWB communications system trades pulse shortness (gaining a high signal/symbol rate) in exchange for two other variables (1) bandwidth (which becomes wider) and (2) S/N (which is reduced). Greater bandwidth use needs FCC approval and a lower S/N requires signal averaging, which then lowers the signal/symbol rate and thus the channel capacity (data rate). Lowering the signal/symbol rate, plus the fact that the symbol/signal of a UWB system has an informational value no higher than 1 bit (and after signal averaging much less), defeats the aim, if the aim is to achieve high capacity or high data rate. These tradeoffs can, of course, to some extent be alleviated by transmitting at an average pulse frequency higher than 2 GHz or by using higher power (if permitted and non-interfering) – but both of these strategies are also available to conventional and noninterfering wireless communications systems.

There is no escape from these trades. As in the case of more conventional communications systems, the UWB wireless system designer must balance trade-offs among high bandwidth efficiency, low transmission *peak* power, low complexity, flexibility in supporting multiple rates and reliable performance as expressed in bit error rates.

---

[5] One method defining this bandwidth is $B = 6.36/\tau$, where B is the bandwidth in MHz, τ is the emitted pulse duration in microseconds at the 50% amplitude (voltage) points (Annex J of Chapter 5 of the *National Telecommunications and Information Administration's Manual of Regulations and Procedures for Federal Frequency Management*, quoted by FCC (2000, p. 2, footnote 8).

[6] S/N = signal power/noise power, where power is defined in units of J/s or VI or $kg.m^2/s^2.m$. It should be noted that the power spectrum or the power density spectrum, both of which are based on harmonic analysis, do not apply to single transient events. It should be appreciated that a very short duration pulse of low energy creates fields of high electric field strength (V/m) and power ($V.I$). *With energy (J) constant*, still greater field strengths and powers can be created by further shortening of the temporal length of the pulse. The FCC has correctly questioned reliance on the power spectral density as the appropriate measure for UWB emissions (cf. FCC (2000, p. 15, para 34)), yet, paradoxically has proposed (ibid, p. 18, para 15) that for UWB emissions > 2 GHz, limits still be based on power spectral density measurements (signal energy level per unit bandwidth).

[7] $S/N/\omega = J/s.\omega$ or $VIs.\omega$ or $kg.m^2/s^2.ms.\omega$.

Time-Bandwidth-S/N Figure-of-Merit

A. Without High Sampling Rate or Averaging or High Power

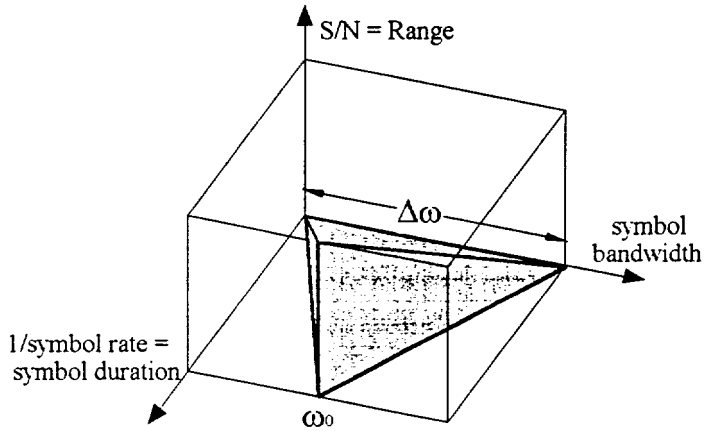

B. With High Sampling Rate or Averaging or High Power

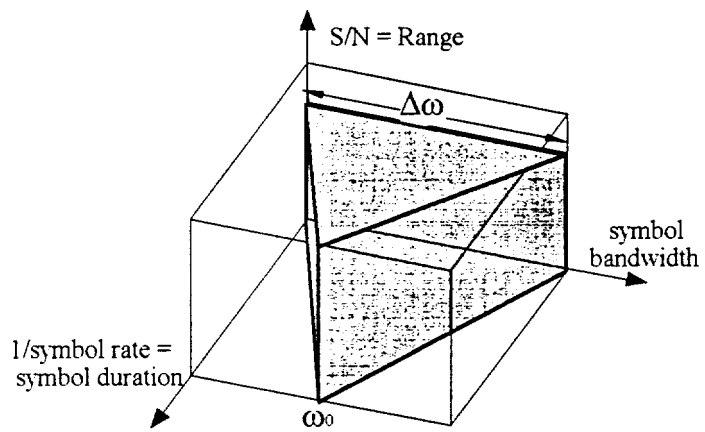

Fig 1.0.1 Representation of the Time-Bandwidth-*S/N* product in the case of UWB communications for constant energy conditions. In A: a shorter duration signal results in an increase in signal bandwidth and a decrease in the *S/N* per frequency. The decrease in *S/N* per frequency is given as a reason for permitting UWB transmissions to operate outside regulated bandwidth control. Unfortunately, such transmissions require different methods of reception. In B: this decrease in *S/N* per frequency is offset (i.e., *S/N* is raised) and detection is achieved by using either: (1) a high sampling rate homodyne receiver; or (2) signal averaging/matched filtering; or (3) high transmitted signal power. However, these remedies come with their own drawbacks. Remedy (1) is offset by the problem of ambient noise, which resembles the signal, entering a wide-open receiver front-end; remedy (2) lowers the data rate or channel capacity; and remedy (3) results in interference to conventional users of the spectrum. In other words, engineering trade-offs still apply. Essentially, a UWB communications system trades pulse shortness (gaining a high signal/symbol rate) in exchange for two other variables (1) bandwidth (which becomes wider) and (2) *S/N* (which is reduced). Greater bandwidth use needs FCC approval and a lower *S/N* requires signal averaging, which then lowers the signal/symbol rate and thus the channel capacity (data rate). Lowering the signal/symbol rate, plus the fact that the symbol/signal of a UWB system has an informational value no higher than 1 bit (and after signal averaging much less), defeats the aim, if the aim is to achieve high capacity or high data rate. As in the case of more conventional communications systems, the UWB wireless system designer must balance trade-offs among high bandwidth efficiency, low transmission *peak* power, low complexity, flexibility in supporting multiple rates and reliable performance as expressed in bit error rates.

It might be supposed that comparisons between UWB communications and conventional communications can proceed using the conventional definitions for the variables in the conventional range equation. In most cases, these variables do have the same connotation and in the case of the conventional definition of receiver noise, it certainly does not. If the claim is valid that a UWB signal is *below* the threshold of conventional heterodyne receivers, it must also be valid that conventional transmitters are transmitting narrower band signals, which in many cases are *above* the threshold of UWB receivers. Therefore a UWB receiver, which necessarily must be ultrabroadband in its front-end, is more vulnerable to interference noise than conventional receivers of narrower bandwidth. Now, it is generally considered that the fundamental receiver noise mechanism is thermal noise and the noise variance is related to the effective noise bandwidth of the receiver. That bandwidth is approximately one half the signal bandwidth. It is also generally assumed that the most common communications channel is one with additive white Gaussian noise (AWGN). In the AWGN case, the noise arises from the receiver itself, i.e., from thermal noise in the first amplifier stage – but this may not be the only noise present in the communications channel in the case of UWB. Even if it is the only noise present, it is conventionally assumed that an observation of this noise through an unbounded bandwidth will have unbounded power. (That assumption is both unrealistic but always assumed in the AWGN case.) If this assumption is adopted in the case of a UWB ultrabroadband receiver, which is also a homodyne receiver, then if E_b is the signal energy per bit for, e.g., a spread spectrum direct sequencing system (DSSS) and also a UWB system, N_o is the channel noise for DSSS, and n_o is the channel noise for UWB, then taking the above remarks into consideration:

$$\frac{E_b}{N_0} \neq \frac{E_b}{n_0} \text{ or } N_0 \neq n_0 .$$

The ultrawideband receiver front-end and the interference from conventional communications transmitters would preclude equivalences. Therefore, direct performance comparisons assuming an equivalence become problematic.

In comparing a UWB system with a DSSS system, it might be supposed that there is an exact comparison between the UWB bandwidth produced by the shortness of the pulse duration and the DSSS bandwidth produced by spreading from a chipping sequence. However, this comparison is misleading because whereas in the case of UWB *all the energy* across the bandwidth constitutes the signal, in the case of DSSS *only* that energy within the spread bandwidth present *before spreading and before transmission* constitutes the signal, the remainder of the energy in the spread bandwidth after reception being rejected as noise. The difference between the two approaches is indicated by the fact that shortening an UWB pulse must be compensated by an increase in the peak power to preserve the energy per bit, but the energy per bit is independent of the chip rate and dependent on the data rate in the case of DSSS.

It might also be supposed that a UWB communications system has an advantage over a DSSS system in that UWB can utilize coherent addition of N pulses to achieve a bit signal-to-noise which is N times the S/N of an equivalent DSSS system. However, the DSSS equivalent of UWB coherent addition is processing gain not bit S/N. Furthermore, just as a DSSS system trades the bandwidth available for data transfer and so data rate,

for processing gain and *S/N*, so UWB trades data rate for coherent addition and *S/N*. Rather than supplying an advantage, UWB coherent addition is merely a strategy for maximizing *S/N* in the presence of noise in the channel, just as processing gain is such a strategy for DSSS to maximize *S/N*. In both instances, if all else remains constant, the increase in *S/N* is achieved at a price: a decrease in data rate. If data rate remains constant, then there are other penalties for the adoption of these strategies. Just as there is minimal processing gain for a high data rate DSSS system, so there is minimal coherent addition for a high data rate UWB system. Both approaches must then increase the average power and in the case of a UWB system, the peak and average power will eventually equalize. A possible choice for a UWB system is to increase the pulse repetition rate to maintain a set data rate, but just as in the case of a DSSS system in which the chip rate is increased, the penalty for this choice is an increase in system complexity, as well as average power. There is thus a direct correspondence between the number of pulses per data bit in a UWB system using coherent addition and the number of chips per data bit in a DSSS system. Of course, if data rate is of no consequence, then the choice of system and compensating penalties will be dictated by other considerations. It is also worth mentioning that these penalties are a consequence of figures of merit which address *peak* power. Confusion arises when comparisons are switched between *peak* and *average* powers of different communications systems and the corresponding figures-of-merit changed at will.

A UWB *radar system* is perhaps more unconventional than a UWB *communications system*, not only in system components, but also in the physics involved in the signal-target interactions. In the UWB radar case, the transmitted signal is shorter in distance length than the target. Whereas the target is a *point scatterer* in the case of conventional radars, which use signals longer in distance length than the distance length of the target, in the case of UWB radar signals, which, in many cases, are signals shorter in distance length than the distance length of the target, the target is *not* a point scatterer. In the case of signals shorter in length than the (macro)target, the (macro)target decomposes into a collection of individual scattering components ((micro)targets) and can be given a scattering matrix formulation. Moreover, depending on the ratio of the length of the sounding signal to the length of the target, the echo or target response can be of at least three kinds: (1) the early time (optical) response; (2) the resonance response; and (3) the late time response (Cheville & Grischkowsky, 1995, 1997). Whereas the early time response is target aspect-dependent, the resonance and the late time response are aspect independent with respect to the harmonic components in the target's response, but aspect-dependent with respect to amplitude of that response. Finally, each (micro)target composing the scattering matrix of the (macro)target can possess aspects of the three kinds of response in the separated-in-time return multiple signals composing that matrix.

The second and third type transient echo responses to each of the microtargets are more conventional. The target resonance response (2) is established when the surface currents are present on the target, and the late time response (3) occurs at the commencement of the decay of the resonance response. Both responses have been studied since at least 1965 (Kennaugh & Moffatt, 1965; Baum, 1971, 1976; Moffatt & Mains, 1975; Van Blaricum, 1978; Van Blaricum & Mittra, 1975; Auton & Van Blaricum, 1981).

The first type of transient echo response to macro or microtargets is quite unconventional. The radar community was first made aware of the early time (optical) component (1) by Morgan (1984) and Pearson (1984), who pointed out that a forced component, in addition to the damped sinusoidal components (the resonance and the late time response), is an essential part of the scattered response over the time interval during which an impulsive plane wave is present on the scatterer (see also Van Blaricum, 1991). This means that a transient scattered field cannot be expressed purely as an exponential series until the scatterer's natural modes are established, i.e., until the resonance component is established. Furthermore, the representation of the transform of a scattered field must contain an exponential entire function (except for observation points in the forward scattered direction). The early time (optical) response of the transient scattered field is characterized by time-varying coefficients determined by local features of the scattering object and is due to direct physical optic fields, as well as a sum of temporally modulated natural modes. The duration of this early time response is also equal to the time the wave shape is present on the scatterer. In some instances and orientations, the early time response (1) can be of much larger peak amplitude than the resonance (2) and late-time (3) responses.

2.0 Major Components of a UWB Radio System

The major components of an impulse radio system are: (2.1) methods for generating pulse trains (transmitter sources); (2.2) methods for modulating a pulse train; (2.3) methods for switching to generate RF pulse train signals; (2.4) methods for detection and receiving; and (2.5) appropriately efficient antennas. The essential 5 major components were presented in the Ross US Patent 3,728,632 of Apr 17, 1973 (Ross, 1973a) and the Harmuth books and papers (1969-1990), and since that time numerous variations on the means of implementation have been proposed.

2.1 Methods for Generating Pulse Trains (Transmitter Sources)

In the 1970s, Harmuth (1972, pp. 244-291) discussed a variety of impulse radiators and Harmuth (1977b, pp. 235-399) presented approaches to practical radiators. Examples of radiators (Fig. 2.1.1) and selective receivers (Fig. 2.1.2) were discussed at this time.

2.2 Methods for Modulating a Pulse Train

A variety of methods for modulating a pulse train have been known for decades and even before the age of transistors. Harmuth (1969, 1972; Smith, 1966, p. 438) addressed some early methods.

2.3 Methods for Switching (RF Pulse Generation)

Some of the many methods available for transmitter sources are:

2.3.1. Light-activated semiconductor switches (LASS) – these switches are generally Si-based (cf. Auston, 1975; Mourou & Knox, 1979; Nunnally & Edwards, 1991; Loubriel et al, 1993; Kingsley et al, 1995).

2.3.2. Light-activated bulk avalanche semiconductor switches (BASS) – these switches are generally GaAs-based (cf. Jayarman, S. & Lee, C.H., 1972; Vainshtein *et al*, 1988;

Pocha et al, 1991; Loubriel et al, 1993; Sarkar et al 1993; Loubriel et al, 1995; Kingsley et al, 1995).
2.3.3. Thyristors based on GaAs (cf. Platts et al, 1995).
2.3.4 Semiconductor-based Pulse Compressor Systems (cf. Edwards et al, 1995).
2.3.5 Marx Bank Pulse Generators (cf. Platts, 1991; Platts et al, 1995; Edwards et al, 1995).
2.3.6 Avalanche Drift Diode Generators (cf. Grekov et al, 1981; Grekhov et al, 1985; Edwards et al, 1995).
2.3.7 Vacuum triodes (cf. Platts et al, 1995).
2.3.8 Magnetic Switches (cf. Platts et al, 1995).
2.3.9 Low voltage tunnel diodes (cf. Ross, 1973a,b; Ross & Lamensdorf, 1972; Ross & Robbins, 1973).
2.3.9 High voltage avalanche semiconductor diodes (see below).
2.3.10 Laser diodes (see below).
2.3.11 Resonant microwave compressors (Didenko & Novikov, 1991; Yushkov & Badulin, 1997).

2.3.1 Avalanche Transistor/Diode Methods of Switching

A simple method of generating UWB signals is by using avalanche transistors and has been known for many years. Morey (1974) cited a transistor in the avalanche mode as a suitable means for a pulse generator in a UWB system. Ross (1986, Table 2.3.1.1, below) shows the avalanche transistor as one method (among others) for achieving pulse sources. Andrews (1986) reviewed the field of fast pulse generators and, in particular, Picosecond Pulse Labs avalanche-transistor pulse generators (p. 103). Astanin & Kostylev (1989), addressing usage not only in the former Soviet Union, states (p. 108): "Generators based on avalanche transistors are widely used".

Table 2.3.1.1
From Ross (1986) Table 1-2, p. 10.
Typical Characteristics of Pulse Sources

Type	Step/Pulse	Best available risetime at amplitude		Notes
Mercury switch	Step	70 ps	300 V	Max PRF = 200 Hz
Avalanche transistor	Pulse	150 ps	12 V	Device selection necessary.
Tunnel diode	Step	25 ps 100 ps	0.25 V 1.0 V	Fastest transition time.
Step recovery	Step	60 ps 100ps 200 ps	20 V 50 V 200 V	Commercially available. Specially ordered four-stack.
Hertzian	Impulse; also pulse modulated.	100 ps 1 ns	1000 V 1000 V	Limited lifetime, sparkgap.
Avalanche diode	Impulse	400 ps	125 V	MHz rep. rate.

2.3.2 Light Activated Switch Methods for Switching Generators

RF short-pulse generators using laser-induced photoconductivity in high resistivity semidonductors were demonstrated by Auston (1975) in silicon. Linear photoconductive semiconductive switching has been an active field since that time (cf.

Lee, 1984. Rosen & Zutavern, 1994). A variety of semiconductors have been employed in photoconductive switches, e.g., Si, GaAs, ZnSe, diamond and SiC (cf. Kingsley et al, 1995). The activity in the field of light activated switching has increased to such an extent that almost yearly meetings are held by the SPIE. The patent by Kim et al (1993) also addresses light activated switching for impulse systems.

2.3.3 Use of "Subcarriers" in Pulse Trains

Subcarrier modulation is a well-known modulation method and explained in many textbooks, e.g., Dixon (1984). Transferring the method to the time domain introduces no new principles. The use of subcarriers and subband coding is a well established field in electrical engineering (cf. Akansu & Haddad (1992) and Vaidyanathan (1993) for reviews of early history). Later attempts to patent the well-known modulations of frequency modulation (FM), amplitude modulation (AM), phase modulation, frequency shift keying (FSK), phase shift keying (PSK), pulse FM and Manchester coding, if taken seriously, would undermine the field of radio communications inasmuch as these methods are the backbone of this mature field.

2.4 Methods for Pulse Detection and Receiving

These include leading edge detection; sampling bridge circuit methods; monostable multivibrator methods; integration and averaging methods; template signal match detection methods; correlation detection methods; signal integrating methods; and synchronous detection methods. All such methods have been known since the 1960s and 70s (cf. Malmstadt & Enke (1963) for a review of early examples of these methods.)

2.4.1 Leading Edge Detection Method

Leading edge detection is commonplace and long utilized. For example, Meleshko (1987) states, page 58:

"In devices which implement the first, simplest method, correlation is performed at the moment when the leading edge at the first input pulse crosses the constant threshold..."

2.4.2 Sampling Bridge Circuit Methods

Sampling bridge circuit methods were commonplace by 1968. The Tektronix Instruction Manual for the Type S-2 Sampling Head (1968) provides a sampling bridge circuit (Fig 2.4.2.1).

2.4.3 Monostable Multivibrator Methods

Monostable multivibrator means is a technique which has been widely used for over fifty years. It is explained on page 440 of the textbook by Malmstadt & Enke, (1963).

2.4.4 Integration and Averaging Methods

Electronic integration and averaging is a technique commonly used over the last fifty years. It is explained in the introductory textbook by Smith (1966, p. 450).

2.4.5 Template Signal Match Detection Methods

Template signal matched detection is commonplace. For example, Meleshko, 1987, Fig. 3.22, page 65 provides an example. A template match is essentially a logical AND operation or a cross-correlation satisfying the long-known Wiener-Hopf equation. It should be noted that template pulse mixing a signal with a gating pulse is not the same as summing a signal with a strobe pulse and is also is a much less sensitive detection operation.

2.4.6 Correlation Detection Methods

Correlation detection of RF signals is extremely well known (cf. Lee, 1960; Skolnik, 1962, p. 275). The sliding correlator as applied to impulse communications and radar was reported in the open literature long ago (cf. p. 143 and chap. 6 *Advanced Signal Design and Processing* of Skolnik, 1962). Other examples of early sliding correlators are shown in Figs. 2.4.6.1-6 in Harmuth (1981) and in Harmuth (1984).

2.4.7 Signal Integration Methods

Integration of signals to match a preset criterion, e.g., summed amplitude, is commonplace. For example, the 1968 Tektronix sampling circuit is a transmission gate followed by a short-term integrator (Tektronix, 1968).

2.4.8 Synchronous Detection Methods

This is a widely used and long-known procedure. Quoting from Fink & Christiansen (1975, p. 14-69): "Figure 14-86c shows a product (synchronous) detector. This type of detector has been used since the advent of single-sideband transmission."

2.5 Monocycle Signals from Antennas driven by Stepped in Amplitude (Ramp Function) Driver Methods

Cronson (1975) showed that virtually any frequency-coded pulse could be generated by a step function (cf. Ross, 1986, p. 11). This is a method also long studied and reported by Harmuth (cf., 1981, p. 48-54, 77; 1990, *Preface* and *section 1.7 - A Guide to Reading*, p. 52).

3.0 Detection & Amplification

There are a number of approaches to the detection and amplification of trains of UWB signals. In most cases, there is an allocation of one-to-many in the assignment of bits to pulses to be transmitted. After 1945 the use of the correlation detection receiver became commonplace. Skolnik in his introductory book (1962, Fig 3.0.1) describes the use of correlation methods in the detection of weak signals and cites the following earlier references: Lee, 1950; Lee & Wiesner, 1950; Lee Cheatham & Wiesner, 1950; Singleton, 1950; Fano, 1951; Rudnick, 1953; George, 1954; Green, 1957; Horton, 1959; Raemer & Reich, 1959. A synchronous detector is also shown in Fink & Christiansen (1975) – Fig 3.0.2. There are a variety of ways to trigger the receiver – on the pulse rise-time, level-detection, integration over time, etc.

In the case of the correlation receiver detector, UWB and gate pulses are *multiplied* to produce a short output unamplified pulse whenever there is a coincidence.

Next, the resultant is fed to a (short term) integrator or averager to produce a reduced amplitude. stretched signal output. If the integrator time is sufficiently long (conventional correlator), or a second long term integrator is employed, the output will then represent the average of the many high repetition rate pulses fed to the correlator. Unfortunately the integrator not only acts as a detector, but also reduces the input amplitude in the step from narrow-pulse, low-duty cycle to averaged output. The long-term integrating correlator thus effects a many-to-one detection of averaged inputs prior to any amplification.

The *Micropower Impulse Radar* (MIR) or "Radar on a Chip" offered an alternative to correlation detection (McEwan, 1994, 2000). The MIR is an integrating peak detector (McEwan, 1994; Fig. 3.0.3) as opposed to the multiply-and-average correlation receiver detector described above. In the case of the MIR receiver detector, UWB and gate pulses are *summed* algebraically to form the input to a peak detector, i.e., the low amplitude UWB pulse and the high amplitude gate pulse, when summed, are above threshold for peak detection, but individually, are not. Moreover, it is not a single UWB pulse which, together with the gate pulse, provides the peak detected signal, but the (long term) summing of a series of UWB inputs. The detector is thus triggered by the simultaneous occurrence of a summed series of low amplitude UWB signals and a coincident large amplitude gate pulse which, together, are algebraically summed. The coincident summing method of a large gate input and summed low amplitude signals effects a many-to-one, peak signal detection process.

4.0 The Tektronix System (1975)

In 1968 Tektronix offered for sale a sampling head (Fig 4.0.1) consisting of a strobe generator (Fig 4.0.2), a sampling bridge (Fig 4.0.3), a blow-by and trigger pickoff (Fig 4.0.4) and a preamplifier (Fig 4.0.4). By 1975 it was possible to build either a UWB communications system or UWB radar using Tektronix laboratory test equipment. Fig 4.0.5 shows such a system using a Tektronix 7S12, an S-4 sampler for receiving means, and an AM502 differential amplifier with filters as a signal processing means.

It is instructive to examine the means achieving detection. The sampling bridge circuit (Fig 4.0.3) does not amplify but merely provides an error signal. Referring to Fig 4.0.3, the Tektronix manual states: "During the sampling time, the strobe pulses forward bias D5 and D6. By normal bridge function, the conduction of D5 and D6 charges or discharges C5, C6, C7 and C8. The voltage charge on these capacitors changes about 2 1/2 % of the difference between the Feedback and DC offset voltage and the incoming signal voltage. This voltage change, called the error signal, is amplified in the Preamplifier." Thus diodes D5 and D6 form a sampling bridge or transmission gate driven by strobe pulses at J51 and J53. Resistors R5 and R6 = 200 ohms and capacitors C5 and V6 = 5 pF for a short-term integrator (balanced configuration) with a 1 ns time constant. D5 and D6 conduct for about 40 to 50 ps, so that integrators charge to about 2 1/2 % of the signal input voltage during the time that the D5 and D6 conduct, providing a voltage transfer efficiency of 2 1/2%. Therefore this approach, although much used and imitated, is nonetheless an inefficient detector.

5.0 Harmuth Systems

Beginning with publication of the first edition of *Transmission of Information by Orthogonal Functions* in 1969, Harmuth has addressed UWB in all its manifestations but under the synonyms: impulse, carrier-free, time domain, nonsinusoidal, orthogonal function, Walsh functions and large-relative-bandwidth radio/radar signals. The five basic subcomponents were also addressed in early representational form and with the electronics available of that time. The second edition of *Transmission of Information....* (Harmuth, 1972) contains *Chapter 6 Nonsinusoidal Electromagnetic Waves* (pp. 244-291) which discussed a variety of impulse radiators as well as the selective reception of impulse signals in mobile communications (cf. *Section 5.4 Signal Selection and Synchronization*, pp. 282-291 with a correlation receiver shown in Fig 189 on page 289 (Fig 5.0.1)).

Harmuth (1975) described transmitters (Fig. 5.0.3) and selective receivers for periodic waves with arbitrary time variation within the period. Harmuth (1977b) reported a more advanced form of the receiver and discussed "pulse compression" – actually signal averaging (Fig 5.0.2). Harmuth (1977b) contains *Chapter 3. Electromagnetic Waves with General Time Variation* pp. 235-399 with the sections *Practical Radiators*, *Practical Receivers* and *Applications to Radar*. Photographs of a radiator and a selective receiver are shown on pp. 301 (Fig 2.1.1) and 317 (Fig 2.1.2), and oscilloscope recordings of nonsinusoidal waves - specifically their electric field strengths - are shown on pp. 285, 295 and 319. A correlation receiver for selective reception is shown on p. 341.

Harmuth's *Nonsinusoidal Waves for Radar and Radio Communication* (1981) contains *Chapter 4, Selective Receivers* and *Section 4.6 Receiver for Nonperiodic Waves*. The circuit shown on p. 143 is a correlation circuit (Fig 2.4.6.1). Several more circuits are shown on pp. 288 (2.4.6.2), 293 (Fig 2.4.6.3), 297 (Fig 2.4.6.4), 302 (Fig 2.4.6.5) and 305 (Fig 2.4.6.6). The correlation receiver or pulse compressor was recognized by then to be the generalized equivalent for waves with arbitrary time variation of the tuned resonant circuit for the selective reception of sinusoidal waves. The pulse compression circuits in this reference are also published in Harmuth (1979 & 1980).

Harmuth (1984) contains *Section 1.2 Transmitter and Receiver for Nonsinusoidal Waves*, *Section 1.3 Nonsinusoidal Spread Spectrum Radio Transmission* and *Section 1.4 Pulse Agility Versus Frequency Agility*. All of these address the major components of a UWB system.

Thus, by the early 1970s the generic system and all of the generic subcomponents for UWB systems of whatever form were in the public domain and by the early 1980s had been extensively discussed.

6.0 Ross & Robbins Systems

Robbins (1972), Robbins & Robbins (1974), Ross & Robbins (1973), Ross (1973a,b), Ross & Robbins (1987) and Ross & Mara (1994) are patents all addressing specific embodiments of a UWB radio receiver.

The patent by Ross (1973) disclosed an impulse radio encoding intelligence on a train of pulses by *pulse interval modulation* or *pulse position modulation* (Ross, 1973, para 9). This patent recognized the utility in spread spectrum systems of a wide

instantaneous bandwidth (as opposed to sequential bandwidth). Subsystems of a UWB radio were disclosed by Robbins (1972), Ross & Lamensdorf (1972), Robbins & Robbins (1974) and Ross & Robbins (1987).

These early patents recognized that the pulse train could be modulated by a code scheme and, moreover, that this method was known even prior to the patents themselves. For example, Ross (1973), para 13:

"It will be understood by those skilled in the art that a variety of ways is available in the prior art for impressing intelligence on the carrier-less base-band pulses of transmitter 2, and for abstracting that intelligence at receiver 3 by well established demodulation techniques operating on the relatively long pulses generated in receiver 3."

Cf. Barrett (1997) for an extension of this approach.

In 1978, Bennett & Ross published *Time-Domain Electromagnetics and Its Applications*. These authors wrote at a time when the term "baseband" was preferred to "UWB" or "time domain", but all these terms are synonymous:

"Work in baseband technology began more than ten years ago at the Sperry Research Center... The experimental phases of these studies were aided by the pioneering development by the Hewlett Packard Company of their sampling oscilloscope.... two different types of tunnel-diode receivers were developed ...[that] led to the evolution of BAseband Radar (BAR)..... More recently, baseband-pulse techniques have been applied to the problem of developing a short-range wireless communication link. .... We review the research areas described above in more detail and refer the reader to references and a comprehensive bibliography where sources for detailed information can be found [Ross et al, 1975]." (p. 1)

"Work in time-domain electromagnetics began in 1962 when attempts were made to verify the analytical solution of the transient behavior of the class of TEM-mode microwave networks....." (p. 1)

"Unfortunately, we found that we could not purchase a generator having an output waveform... The problem was solved by generating the required waveform ourselves, synthetically. That is, as shown in Fig. 1, we first generated a step function using a tunnel-diode source (rise time <100 ps) and fed this...." (p. 1)

"Improvements in solid-state devices since these initial experiments have resulted in significant improvements in both the risetime and amplitude of generated step and pulse functions. Table I summarizes the state of the art in pulse-generation techniques [Nicholson, 1972]...." (p. 2)

However, the essential 5 major components of a UWB system had been already presented in Ross (1973) using methods of implementation long in use as the following quotations show:

(Ross (1973), Para 8, Line 45) "The output signals found on leads 47, 48 may be coupled to any desired utilization apparatus 51, 52 of the type which functions in a normal manner upon receipt of pulses of conventional or non-short-base-band duration normally manipulated by ordinary pulse handling circuits. Although the actual utilization apparatus is not a necessary part of the present invention, it will be seen by those skilled in the art that it may take any of a variety of forms. For example, a single subnanosecond base-band pulse received by antenna 5 may be considered to be an intelligence transmission and the consequent output leads 47 and 48 may be placed directly on a conventional cathode ray tube display 52 of the type, for instance, in which the sweep of the indicator along one coordinate is triggered by the pulse to be displayed, the pulse itself, after slight delay, being used to sweep the cathode ray beam along a second coordinate. Signal processor 51 and display 52 may alternatively, for example, count the number of subnanosecond pulses received by processor 51 in an arbitrary time period or in a particular pulse burst and

then indicate the total count on a conventional numeric display 52. A train of subnanosecond pulses collected by antenna 5 may have a modulation such as carried by pulse interval modulation, which may readily be demodulated in a conventional way by processor 51 and either displayed on indicator 52 or, if the demodulated signal is an audio signal, used to operate a loud speaker or other audio instrument in a conventional manner.

(Ross (1973) Para 13, Line 20): the base-band pulse receiver 3, as has been seen, may be employed in the novel communication system to receive intelligence communications in a variety of ways, such as by receiving a single subnanosecond base-band pulse from transmitter 2 then generating an output pulse of duration, for example, of the order of 100 nanoseconds, and displaying same on a conventional indicator 52 of FIG. 3. In this instance, transmitter 2 of FIG. 6 may be, for example, operated by manually closing a switch corresponding to transistor switch 92, at the same time disconnecting battery 90 at one of its terminals so that transmission line 60 cannot recharge. Equivalent electronic operation may be readily visualized.

More sophisticated arrangements for conveying intelligence messages from transmitter 2 to receiver 3 are readily apparent to those skilled in the art.

(Ross (1973) Para 13, Line 55): Similarly, pulse interval modulation in transmitter 2 and cooperative demodulation in receiver 3 may be employed for conveying intelligence messages. It will be understood by those skilled in the art that a variety of ways is available in the prior art for impressing intelligence on the carrier-less base-band pulses of transmitter 2, and for abstracting that intelligence at receiver 3 by well established demodulation techniques operating on the relatively long pulses generated in receiver 3.

(Ross (1973) Para 14 Line 65): The theory of operation of the novel communication system will readily be understood by those skilled in the art from the foregoing discussion. However, the following simple analysis of the invention may be offered as one of several possible analyses which might alternatively be selected to explain operation of the short base-band pulse communication system. It will be understood that there is no limitation solely to use of the following analysis since other analyses might equally well be employed. The purpose of the selected analysis is top interrelate time and frequency domain dimensions in dealing with the carrierless short base-band signals employed in the present invention and, in turn, to relate such parameters to the noise level in a conventional narrow band pulse receiver and its characteristic interference level.

(Ross (1973) Para 16, Line 45): While the invention has been described in its preferred embodiments, it is to be understood that the words which have been used are words of description rather than limitation and that changes within the purview of the appended claims may be made without departing from the true scope and spirit of the invention in its broader aspects.

The following are the claims of the Ross (1973) patent which refer to particular instantiations of the 5 basic components:

(Ross (1973) Claim 1): The combination comprising: transmitter means for transmitting a base-band signal, receiver means having substantially non-dispersive TEM-mode transmission line means for receiving said base-band signal, pulse forming detector means directly responsive to said substantially non-dispersive TEM-mode transmission-line means for producing an output signal of substantially greater duration than said base-band signal, and utilization means responsive to said greater duration output signal.

(Ross (1973) Claim 2): Apparatus as described in claim 1 wherein said transmitter means includes means for transmitting without distortion, a subnanosecond duration electromagnetic pulse having a base-band frequency range spectral line content, the energy in any selected one of said spectral lines being below the ambient noise level of said receiver means.

(Ross (1973) Claim 3): Apparatus as described in claim 2 wherein said pulse forming detector means responsive to said substantially non-dispersive TEM-mode transmission line means comprises

semiconductor diode means having first and second states and coupled in energy exchanging relation with said substantially non-dispersive TEM-mode transmission line.

(Ross (1973) Claim 4): Apparatus as described in claim 3 wherein said pulse forming detector means responsive to said substantially non-dispersive TEM-mode transmission line means comprises: first circuit means biasing said semiconductor diode means in said first state for permitting said semiconductor diode means to change from its said first to its said second state instantaneously upon arrival at said semiconductor means of said subnanosecond duration electromagnetic pulse in substantially undistorted form, second circuit means coupled to said first circuit means for producing said greater duration output signal, and third circuit means utilizing a version of said extended duration output signal for returning said semiconductor diode means to its said first state.

(Ross (1973) Claim 5): Apparatus as described in claim 2 wherein said pulseforming detector means is biased to respond substantially instantaneously upon receipt by said receiver means of a base-band signal whose amplitude exceeds a predetermined amplitude for producing said greater duration output signal.

(Ross (1973) Claim 6): Communication means comprising: transmitter means for transmitting a train of subnanosecond duration base-band electromagnetic pulses, receiver means having substantially non-dispersive TEM-mode transmission line means for receiving said train of subnanosecond duration base-band electromagnetic pulses, pulse forming detector means directly responsive to said substantially non-dispersive transmission line means for producing an output train of non-overlapping pulses each of greater duration than each of said subnanosecond duration electromagnetic pulses, and utilization means responsive to said output pulse train.

(Ross (1973) Claim 7): Apparatus as described in claim 6 wherein said utilization means responsive to said output pulse train includes means for abstracting intelligence signals from said output pulse train.

(Ross (1973) Claim 8): Apparatus as described in claim 7 including display means for displaying said abstracted intelligence signals.

7.0 Russian Systems

There has been extensive development of UWB systems and subsystems in the former Soviet Union and the present Russian Federation. The work arose out of programs to improve power systems in the 1950s. Even at this stage, the difference was noted between conventional continuous wave signal description methods and ultrashort pulse methods (e.g., Zernov, 1951). The simplicity of the methods of time domain analysis for short pulse UWB signals, as opposed to continuous, steady state signals, was described by Kharcevitch (1952).

Initially, radio pulses of nanosecond duration were generated using traveling wave tube modulation (Astanin & Kardo-Sysoev, 2000). In 1957 Astanin at the *A. Mozjaisky Military Air Force Academy* developed an X-band 0.5 nanosecond duration transmitter for waveguide study. A receiver-correlator with a T-bridge waveguide and mechanically controlled delay was used (Astanin, 1964). At the same time, at the Radioelectronics Institute of the *USSR Academy of Science*, Kobzarev and collaborators conducted tests on indoor ranges of ultrashort pulse high resolution radars. These constituted the first stage of development of UWB systems in Russia (Astanin & Kardo-Sysoev, 2000).

The next stage of development utilized fast semiconductor switches, beginning with Shatz (1963), and continuing at the *Ioffe Physico-Technical Institute* (see below). As in the United States, progress was facilitated by the availability of fast sampling

oscilloscopes – initially at Novgorod (Rjabinin) and at Vilnius, Lithuania (Efimtchik & Levitas). The theoretical basis for time-scale transformation procedures was developed by Naidenov (1978) and eventually 10 GHz sampling oscilloscopes were developed. At this time, the applications were in GPR (Finkelstein, 1994, Shirman, 1991). It was realized that UWB signals constitute a separate class of signals and that "Doppler" in the case of ultrashort pulse trains becomes not a measure of phase, but a time scale transformation (Astanin & Dorsky, 1988; Astanin & Kostelev, 1989). These investigations resulted in the formulation of a time domain analysis of signals or *Radar Target Characteristics* involving target impulse response, ramp response, as well as signal shape and signal structure description (Astanin et al, 1994).

While the different nature of ultrashort pulse or UWB systems from conventional radars became enveloped in controversy in the United States, it was first realized in Russia that ultrashort (i.e., shorter than target length) pulses deliver more target parameter information, such as target state, orientation, etc., than do conventional long (i.e., longer than target length) pulse systems. This realization led to the addressing of target classification and imaging, as well as to the theoretical issues of *ill-posed problem* solution (Tikhonov & Arsenin, 1986; Kostelev, 1984). The theory of ill-posed problems became a new branch of mathematics and its basic results were first obtained by Soviet mathematicians. A collection of the early papers in the field has been published in English (Tikhonov & Goncharsky, 1987). Treatments of ultrashort pulse signal returns also used tomographic methods (Kononov, 1992) and wavelets (Astanin & Kostylev, 1997). The development of ultrashort pulse transmitters even included picosecond and femtosecond pulse transmitters (Glebovitch et al, 1984). In recent years, there have been major theoretical advances (e.g., Feld (1991), Borisov (1995) and Kostylev (2000)) as well as advances in mine detection (Astanin et al, 2000).

From a subcomponent standpoint, the obvious solutions were used, as they were in the United States. For example, Astanin & Kostylev (1989) summarized the earlier work addressing a time domain transmitter and receiver (page 104, Fig. 5.2) and observed that "Generators based on avalanche transistors are widely used" (p. 108). Meleshko (1987) in a section headed: *Time Correlation of Pulsed Signals* stated "In devices which implement the first, simplest method, correlation is performed at the moment when the leading edge at the input pulse crosses the constant threshold." Furthermore, many circuit designs of *"Tracking-Threshold Shapers"* are shown, indicating that the use of signal edge detection was commonplace.

Varganov et al (1985, p. 5) provided one definition of superwideband signals, namely: $\Delta f/f = 1$, and described a number of methods for transmitting and receiving impulse signals. Presently, there is a variety of definitions of UWB[8].

In the late 1960s and early 1970s Kardo-Sysoev discovered a new method for switching modular thyristors called Avalanche Injection (AI). Even at these early dates,

---

[8] (1) DARPA (1990) – UWB devices must have a –20 dB fractional bandwidth of at least 0.25, where the fractional bandwidth is $2(f_H-f_L)/(f_H-f_L)$, where f_H is the upper frequency of the –20 dB emission point and f_L is the lower frequency of the –20 dB emission point. The center frequency is defined as $(f_H+f_L)/2$.

(2) FCC (2000, p. 9, para 21) – the Federal Communications Commission has provisionally adopted the DARPA (1990) definition, but with a modification: UWB devices are defined as any devices where the fractional bandwidth is greater than 0.25 "or occupies 1.5 GHz or more of spectrum." The FCC also provisionally proposes to base the UWB definition on the – 10 dB bandwidth, rather than the –20 dB bandwidth. Furthermore, the FCC provisionally adopts the DARPA (1990) definition of center frequency.

switching times of ~10 nsec. at 1 kV and >100 A were achieved (Kardo-Sysoev et al, 1976). The group at the *Ioffe Physico-Technical Institute*, St. Petersburg headed by Kardo-Sysoev also pioneered the development of delayed ionization switches called SAS or silicon avalanche shapers (Kardo-Sysoev et al, 1981). The SAS required high risetime triggering (>10^{12} V/s) and have been used as shaping heads for thyratrons and vacuum tubes. A second generation of devices – Drift Step Recovery Diodes or DSRDs – was capable of supplying that triggering (Kardo-Sysoev et al, 1985). These developments made possible solid state pulsers with >MW peak powers and 0.1 ns. fronts. The devices were used in the late 1980s in the development of an anti-stealth UWB pulsed phased antenna array – a development which was ultimately cancelled on the collapse of the USSR (Kardo-Sysoev, 2000).

Presently, the *Ioffe Physico-Technical Institute* group offers an extremely powerful pulser combining all the earlier work in the form of compressor cells. The compressor cells are: modulator thyristors for 100 nsec. cells, DSRDs for nanosecond cells and SASs for subnanosecond cells.

Russian ground penetrating radars include those of I.M. Finkelshtein (Riga) and V.E. Kotenkov (Moscow).

8.0 Summary Observations

In summary, the pioneering work of Harmuth, Ross, Robbins, van Etten, and Morey, as well as extensive work in the former Soviet Union/Russian Federation defined UWB systems, both radar and communications, and did so in a very practical manner in the early 1970s and 1980s using the electronics of the time. Others have contributed to particular instantiations of the subsystems described by these pioneers, but after the pioneering contributions, no one can, or should, claim to have invented the field of UWB radio, radar or communications, nor to have invented a particular component or components which made it practical. There never was a time such that a particular subcomponent invention was required for UWB systems to become possible, except, perhaps, the sample-and-hold oscilloscope. In the commercial arena: UWB systems have been utilized and commercialized beginning in the 1970s.

A number of summary observations can be made concerning this historical development of UWB:

- UWB radar systems have been in the commercial world since the 1970s. They have been successfully used in ground-, wall- and foliage-penetration, position-location, collision warning for avoidance, fluid level detection, intruder detection and vehicle radar measurements. Future applications include: distance and air-bag proximity measurements and backup warning, road and runway inspection, breathing and heart monitoring, RF ID, and camera auto-focus.

- There was/is nothing new about the fundamental design of *subsystems* of a UWB communications system or any component part. *Subsystem* concepts, of certain levels of sophistication or efficiency, were readily available to G. Ross when he obtained his 1973 patent for a UWB communications *system*.

• What was/is new is the *assumption* in the case of UWB *communications* systems, that such systems can coexist without interference with *other* communications systems which use synchronous receivers and are regulated by conventional FCC spectrum habitation requirements. This assumption specifically requires that the receivers of conventional systems *not only* normally operate at higher *average power/frequency thresholds* than do those of UWB receivers, (which must either achieve acceptable signal-to-noise levels *over time* by signal averaging, or by high instantaneous signal power levels), *but also* normally are not subject to electronic upset by *high peak power, transient* UWB signals. These are two separate requirements, which are usually assumed identical.

• This assumed absence of interference of UWB communications systems with other conventional receivers and also electronic upset of a variety of forms of electronic equipment[9] has yet to be adequately validated – cf: Aiello et al (2000) and FCC (2000) – and there is a second assumption that pulse signals above 2 GHz are relatively noninterfering due to propagation losses (FCC, 2000, p. 13, para 27). Indeed, the effect of transient RF signals, as opposed to steady state signals, on materials and circuits, is a complex subject but poorly understood – cf. Barrett, (1991; 1995a). Moreover, the effect of a train of transient signals on conventional receivers and forms of electronic equipment may be a nonlinear temporal summation of the individual transients and a function of the relaxation time of a particular material or a particular circuit. Making the problem of interference even more complex to study is the fact that although there is a short list of electronic materials, there is a long list of possible electronic circuits in victim receivers, each with a specific relaxation time[10]. Despite this lack of knowledge concerning interference susceptibility, some UWB proponents do not believe in cumulative interference (cf. FCC (2000), p. 21, para 46).

• In the case of more than one UWB communications system operating in asynchronous mode, the assumed absence of UWB-induced interference to other locally operating UWB systems has also yet to be validated. This form of interference, which may be absent or rare in the case of UWB radar, may yet be anticipated to be commonplace in the case of more widely used UWB communication systems.

• Shannon's channel capacity laws are universally valid and apply to UWB communications systems – regardless of whether a government limits the bandwidth and the power used. However, UWB communications systems have yet to be evaluated with respect to (a) bandwidth efficiency; and (c) power efficiency. UWB communications

---

[9] E.g., GPS, which operates in the 1559-1610 MHz frequency band.

[10] FCC (2000, p. 14, para 33), regarding possible variables affecting susceptibility to interference, mentions: "typical front-end bandwidths before the first mixer in receivers; typical dynamic range limits of receiver mixers; typical IF bandwidths; and required signal-to-interference ratios for reliable performance of the system assuming interference is white gaussian noise...." These variables are, indeed, important. However, what is meant by "typical" is usually typical peformance with respect to continuous, rather than transient, signals. Furthermore, a pulse transient is a broad spectral bandwidth signal (mathematically), but the frequencies are precisely phase-locked, not randomly phase related as in white noise. Therefore it is not clear that these "typical" measurements will provide an accurate prediction of interference by real transient signals.

systems' bandwidth efficiency rating – the measure of bandwidth (i.e., real bandwidth, not merely that bandwidth which can be detected above conventional receiver thresholds) used for data rate achieved – is presently extremely poor, and its power efficiency rating – distance achieved for power (peak not average) used – is also poor[11].

• A UWB communications system is a strategy – a *limiting case strategy* – of utilizing a communications channel's time-bandwidth-power product, bypassing the FCC bandwidth restrictions, and allocating extremely broad instantaneous bandwidth to the symbol/signal . There are, of course, other strategies and other approaches to utilizing that same product but keeping with FCC guidelines. In the case of UWB radar there are proven advantages for using UWB systems in precisely defined situations. There is the distinct advantage that with pulses shorter than the length of the target, the target is not a point scatterer. However, the claimed advantages of the UWB communications approach are that – if non-interfering with other communications systems – the approach provides modest data rates but robust communications in the presence of environmental interference factors, and that the approach is superior in the presence of multipath transmissions. These claims may prove valid but have yet to be proven under normally operating conditions.

• A UWB communications transmitter system to a great extent shares the same systems configuration – if at lower power – as that of an electronic upset weapon or jammer. The differences lie mainly in the signal power levels at set distance. As before noted, the transient-response of a victim receiver or equipment is material- and circuit-dependent. The transition set of characteristics at which a non-interfering UWB communications transmitter becomes an electronic-upset UWB jammer has yet to be defined. Furthermore, once defined, one may assume that the transition set of characteristics will always be relative to the devices affected by the upset/interference. Transient effects are more complex than steady state effects. Therefore regulatory rule-making will necessarily have to be complex.

• In the recent past, and in the case of continuous wave systems, standards of emission have relied on power spectral density measurements. However, it is well known that the power spectral density measure, with origins in harmonic analysis, and with a relationship to the autocorrelation function, is an entirely inappropriate measure of

[11] A declared motivation of the FCC interest in considering permitting the operation of UWB systems is that it "would permit scarce spectrum resources to be used more efficiently" (FCC, 2000, p. 1). However, that aim to achieve efficiency addresses the issue of whether UWB transmissions do or do not interfere with the reception of conventional frequency receivers, i.e., of whether the noise floor of such receivers can be utilized without penalty. This is a different efficiency aim than the aim to achieve the highest data throughput through a channel of precisely defined and restricted bandwidth. Perhaps it is not even an aim in efficiency. Engineering trades of time, bandwidth and power assume a zero-sum game. Some proponents of UWB technology tacitly acknowledge the zero-sum game, but claim that the *S/N* penalties from "reuse" of spectral areas already occupied by conventional narrow and broadband systems are spread over *many* victim receivers. Therefore, the argument goes, the *penalty per victim receiver* is small. Thus, rather than using the "scarce spectrum resources... more efficiently", operation of UWB communication systems would be an exercise in interference tolerance – because there must be interference no matter how little. But tolerance is not efficiency.

transient, and UWB, signals. The power spectral density is an even function of frequency and possesses no phase information about the signal. A transient signal is not an even function of frequency and a valid peak power measurement is critically dependent on signal phase. Yet some proponents of UWB systems have pointed to a low power spectral density as an indication of negligible interference potential with respect to narrowband receivers, when, in fact, such a harmonic analysis is an inappropriate continuous wave (harmonic) analysis for a signal transient. In fact, it is entirely conceivable that a transient of rapid change in field strength could have a broad and flat power density spectrum, but yet powerful interference, and even electronic upset, capabilities. A fast risetime pulse not only can produce multiple harmonic responses in a narrowband receiver, but even considerable destructive heating effects.

• The measurement of peak power levels is only as accurate as the sampling rate of the measuring device. It is worthwhile observing that a sampling rate is a measure of operations over time. Therefore in assessing the peak power of a UWB transmitter, it is preferable to take the frequency bandwidth as of secondary importance and focus on the signal duration and its risetime. If the reciprocal of the signal duration and risetime are greater than half the sampling rate of the measuring instrument (i.e., greater than the Nyquist rate), the measured power is not a true peak power measure. Yet some UWB proponents believe that peak output is not the crucial variable in causing interference to a narrowband receiver, and only the power spectral density of the pulse and the pulse repetition frequency are causes of that interference (FCC, 2000, p. 19, para 41). The FCC has proposed two methods of measuring peak power: (1) the peak level of the emission over a bandwidth of 50 MHz, and (2) the absolute peak output of the emission over its entire bandwidth (*ibid*, pp. 19-20, para 42). Of course, both proposals beg the question of how "peak power" is to be measured. The "peak power" in a 1 GHz monocycle signal measured by an instrument with a sampling rate of less than 2 GHz is actually an average power regardless of the emission bandwidth – instantaneous or sequential – sampled. Casting around for an appropriate measuring instrument, some faith has been placed in a "pulse desensitization factor" correction of an inadequately sampling spectrum analyzer (ibid, p. 23, para 51, footnote, 107), a method which guesses a true measure, on the basis of a measurement at an inadequate sampling rate (*ibid*, p. 24, para 51). This method is clearly inadequate. All things considered, the (appropriately Nyquist-) sampling oscilloscope is probably an adequate measuring instrument (*ibid*, p. 53, para 24).

• Compounding this stew of unknowns: the UWB field, in general, and the development of UWB communications systems, in particular, have been plagued, to an unprecedented extent, by exaggerated performance claims in the public press and invalid priority and originality claims.

9.0 References

Aiello, G., Rogerson, G.D. & Enge, P., Preliminary assessment of interference between ultra-wideband transmitters and the global positioning system: a cooperative study. *Proceedings of the January 2000 National Technical Meeting of the Institute of Navigation.*

Akansu, A.N. & Haddad, R.A., *Multiresolution Signal Decomposition*, Academic, New York, 1992.

Andrews, J.R., Fast pulse generator survey. Pp. 95-121 E.K. Miller (Ed.) *Time-Domain Measurements in Electromagnetics*, Van Nostrand Reinhold, New York, 1986.

Astanin, L. Yu., Analysis of electron current in a traveling wave field by beam velocity modulation. *Vopr. Radioelectronici*, 12, 34, 1964 (Russian).

Astanin, L. Yu., Ultrawideband signals - a new step in radar development. *IEEE AES Systems Magazine*, March, 12-15, 1992.

Astanin, L. Yu. & Dorsky, Yu., *Russian Patent* No. SU 1667512 A1, 1988.

Astanin, L.Yu. & Kardo-Sysoev, A., personal communication, 2000.

Astanin, L. Yu. & Kostylev, A.A., *Principles of Superwideband Radar Measurements* (Russian) Moscow, Radio i Svyaz', 1989.

Astanin, L. Yu. & Kostylev, A.A., Wideband signals - a new step in radar development. *IEEE AES Systems Magazine*, March, 12-15, 1992.

Astanin, L. Yu., Kostylev, A.A., Zinoviev, Yu.S. & Pasmurov, A. Ya., *Radar Target Characteristics: Measurements and Applications*, CRC Press, Boca Raton, 1994.

Astanin, L.Yu. & Kostylev, A.A., *Ultra-Wideband Radar Measurements: Analysis and Processing (Radar. Sonar, Navigation & Avionics Series)*, IEE, London, UK, 1997.

Astanin, L.Yu. et al, Some problems in GPR soft- and hardware for improving mine detection and classification. *Proc. of Euroem 2000 Conf.*, 30 May-2 June, Edinburgh, 2000.

Auston, D.H., Picosecond optoelectronic switching and gating in silicon. *Appl. Phys. Lett.*, 26, 101, 1975.

Auton, J.R. & Van Blaricum, M.L., Investigation of procedures for automatic resonance extraction from noisy transient electromagnetics data. ADA #104530, #104531, and #104532, 17th August, 1981.

Barrett, T.W., *Impulse (Time-Domain) Radar Technology Assessment Colloquium* W.J. Schafer Associates, Arlington, VA, 16th-17th March, 1988.

Barrett, T.W., in Noel, B., (Ed.), *Ultra-Wideband Radar: Proceedings of the First Los Alamos Symposium*, CRC Press, Boca Raton, FL, 1991.

Barrett, T.W., Energy Transfer through Media & Sensing of the Media. Pp. 365-434 in Taylor, J.D. (Ed.), *Introduction to Ultra-Wideband Radar Systems*, CRC Press, Boca Raton, FL, 1995a.

Barrett, T.W., Performance Prediction & Modeling. Pp. 609-656 in Taylor, J.D. (Ed.), *Introduction to Ultra-Wideband Radar Systems*, CRC Press, Boca Raton, FL, 1995b.

Barrett, T.W., *Ultrafast Time Hopping CDMA-RF Communications: Code-As-Carrier, Multichannel Operation, High Data Rate Operation and Data Rate on Demand.* U.S. Patent 5,610,907 dated March 11th, 1997.

Baum, C.E., On the singularity expansion method for the solution of electromagnetic interaction problems. *Air Force Weapons Laboratory, Interaction Note 88*, December, 1971.

Baum, C.E., Emerging technology for transient and broad-band analysis and synthesis of antennas and scatterers. *Proc. IEEE*, 64, 1598-1616, 1976.

Baum, C.E., Carin, L. & Stone, A.P., (Eds.) *Ultra-Wideband, Short-Pulse Electromagnetics 3*, Plenum, New York, 1997.

Bennett, C.L. & Ross, G.F., Time-domain electromagnetics and its application. *Proc. IEEE* 66, 299-318, 1978.

Bertoni, H.L., Carin, L. & Felsen, L.B. (Eds.) *Ultra-Wideband Short-Pulse Electromagnetics*, Plenum Press, 1993.

Black, H.S., Beyer, J.W., Grieser, T.J. & Polkinghorn, F.A., A multichannel microwave radio relay system. *AIEE Trans. Electrical Engineering*, 65, 798-805, 1946.

Borisov, V. & Utkin, A., Transient electromagnetic field produced by a moving pulse of line current. *J. Phys. D: Appl. Phys.*, 28, 614-622, 1995 (English).

Bunkin B. & Kashin V., Distinctive features, problems and perspectives of subnanosecond radar video pulses. (Russian) *Radiotechnica*, 4-5, 128-133, 1995.

Carin, L. & Felsen, L.B., (Eds.) *Ultra-Wideband Short-Pulse Electromagnetics 2*, Plenum, New York, 1995.

Chemousov, V. Dispersion of nonharmonic electromagnetic waves in ideally conducting bodies of finite size. (Russian) *Radiotechnology & Electronics (Russian Academy Magazine)* 8, 31-9, 1965a.

Chernousov V. Nonstationary Radiation of Antenna Systems. (Russian) *Radiotechnology & Electronics (Russian Academy Magazine)* 1, 1446-1452, 1965b.

Chernousov V. Dispersion of idealy conducting nonharmonic electromagnetic waves in the Kirchoff approximation. (Russian) *Radiotechnology & Electronics (Russian Academy Magazine)* 10, 1750-1756, 1969.

Cheville, R.A. & Grischkowsky, D., Time domain terahertz impulse ranging studies. *Appl. Phys. Lett.*, 67, 1960-62, 1995.

Cheville, R.A. & Grischkowsky, D., Late time target response measured with Thz impulse ranging. Submitted for publication, 1997.

Cook, C.E. & Bernfeld, M., *Radar Signals: An Introduction to Theory & Application*, Academic, 1967.

Cronson, H., Picosecond pulse sequential waveform generation. *Proc. IEEE, 1975 MTS International Symposium:* 185-6, 1975.

DARPA: OSD/DARPA *Assessment of Ultra-Wideband (UWB) Technology*, Ultra-Wideband Radar Review Panel, R-6280, Office of the Secretary of Defense, Defense Advanced Research projects Agency, July 13, 1990.

Davis, J. et al., Some physical constraints on the use of "carrier-free" waveforms in radio-wave transmission systems. *Proc. IEEE* 67 884-891, 1979.

De Rosa, L.A., Random impulse system. U.S. Patent 2,671,896 March 9, 1954.

Didenko, A.N., Novikov, S.A., Forming of high power UWB radio signals by series compression. *Russian Proc. Academy of Sci.*, 321, 518-520, 1991.

Dixon, R.C., *Spread Spectrum Systems*, Wiley, 1984.

Edwards, R.N., Carey, W.J. & Nunnally, W.C., pp. 41-49 in Carin, L. & Felsen, L.B., (Eds.) *Ultra-Wideband Short-Pulse Electromagnetics 2*, Plenum, New York, 1995.

Efanov V., Kardo-Sysoev A. & Jarin P., High-voltage semiconductor generator of rectangular pulses with controllable duration. (Russian) *Devices and Experimental Technique*, 4, 1997.

Fano, R.M., Signal-to-noise ratios in correlation detectors. *MIT Research Lab Electronics Tech. Rept* 186, Feb 19, 1951.

FCC: Federal Communications Commission, United States: *Notice of Proposed Rule Making* (NPRM) FCC 00-163, ET Docket 98-153, *In the matter of Revision of Part 15 of the Commission's Rules Regarding Ultra-Wideband Transmission Systems.* Adopted: May 10th, 2000; Released May 11th, 2000.

Feld, Ya., Theorems and problems associated with transient phenomena in electromagnetics. *Doklady Academy of Sciences USSR*, 318 No 2, 1991 (Russian).

Fink, D.G. & Christiansen, D. (Eds.) *Electronics Engineers' Handbook*, McGraw-Hill, 1975.

Finkelstein, M., (ed) *Subsurface Radar*, Radio i Svjaz, Moscow, 1994 (Russian).

George, S.F., Effectiveness of crosscorrelation detectors. *Proc. Natl. Electronics Conf.* (Chicago) 10, 109-118, 1954.

Glebovich, G.V., Andriyanov, A.V., Vvedenskij, V., Kovalev, I.P., Krylov, V.V. & Ryabinin, A., *Study of Objects Using Picosecond Pulses*, Moscow, Radio i Svyaz', 1984.

Green, P.I., The output signal-to-noise ratio of correlation detectors. *IRE Trans*, IT-3, 10-18, 1957.

Grekov, I.V., Kardo-Sysoev, A.F., Kostina, L.S. & Shenderey, S.V., High-power sub-nanosecond switch. *Electronics Letters* 17, 422, 1981.

Grekov, I.V., Efanov, V.M., Kardo-Sysoev, A.F. & Smirnova, I.A, Subnanosecond semiconductor power switches with long "on" time. *Sov. Tech. Phys. Lett.* 11, 372-3, 1985.

Harmuth, H.F., *Transmission of Information by Orthogonal Functions*, First Edition, Springer, NewYork, 1969.

Harmuth, H.F., *Transmission of Information by Orthogonal Functions*, Second Edition, Springer, New York, 1972a.

Harmuth, H.F., Signal Processing and Transmission by Means of Walsh Functions. U.S. Patent 3,678,204 dated July 18, 1972b.

Harmuth, H.F., Sequency filters based on Walsh functions for signals with two space variables. U.S. Patent 3,705,981 dated Dec 12, 1972c.

Harmuth, H.F., Range-Doppler Resolution of Electromagnetic Walsh Waves in Radar. *IEEE Trans. Electromagn. Compat.*, EMC-17, 1975, 106-111.

Harmuth, H.F., Selective Reception of Periodic Electromagnetic Waves with General Time Variation. *IEEE Trans. Electromagn. Compat.*, EMC-19, 137-144, 1977a.

Harmuth, H.F., *Sequency Theory*, Academic Press, New York 1977b.

Harmuth, H.F., Frequency-sharing and spread-spectrum transmission with large relative bandwidth. *IEEE Trans. Electromagnet. Compatibility*, EMC-20, 232-9, 1978.

Harmuth, H.F., Synthetic Aperture Radar Based on Nonsinusoidal Functions. II. Pulse

Compression, Contrast, Resolution, and Doppler Shift. IEEE Trans. EMC, *IEEE Trans. Electromagn. Compat.* EMC-21, ,40-49, 1979.

Harmuth, H.F., Synthetic Aperture Radar Based on Nonsinusoidal Functions. VI. Pulse Position and Pulse Shape Coding. *IEEE Trans. Electromagn. Compat.*, EMC-22, 93-106, 1980.

Harmuth, H.F., *Nonsinusoidal Waves for Radar and Radio Communication*, Academic, New York, 1981.

Harmuth, H.F., *Antennas and Waveguides for Nonsinusoidal Waves*, Academic, New York, 1984.

Harmuth, H.F., *Radiation of Nonsinusoidal Electromagnetic Waves*, Academic, New York, 1990.

Heyman, E. & Mandelbaum, B., (Eds.) *Ultra-Wideband Short-Pulse Electromagnetics 4*, Plenum, 1999.

Hoeppner, C.H., Pulse communication system. US Patent 2,999,128 dated Sept 5, 1961.

Horton, B.M., Noise-modulated distance measuring systems. *Proc. IRE*, 47, 821-828, 1959.

Immoreev, I., Use of ultra-wideband location in air defense. (Russian) *Questions of Special Radio Electronics - Series Radar Engineering*, 22, 76-83, 1991.

Immoreev I., Ultra-wideband radars: main features and dissimilarities with conventional radars. (Russian) *Electromagnetic Waves and Electronic Systems (Russian Academy Magazine)* 2, N1, 81-88, 1997.

Immoreev I., Ultra-wideband radars: new opportunities, uncommon problems, system features. (Russian) *Proceedings of Bauman Moscow State Technical University*, V.4, 25-56, 1998.

Immoreev I. & Fedotov D., Optimum processing of radar signals with unknown parameters. (Russian) *Radiotechnica*, 10, 84-88, 1998.

Immoreev I. & Teliatnikov L., Energy efficiency of sounding pulse in ultra-wideband radar. (Russian) *Radiotechnica*, 9, 37-48, 1997.

Immoreev, I. & Zivlin, V., Moving target Indication in radars with the ultra-wideband sounding signal. (Russian) *Questions of Special Radio Electronics - Series Radar Engineering*, 3, 1992.

Jayarman, S. & Lee, C.H., Observation of two-photon conductivity in GaAs with nanosecond and picosecond light pulses. *Appl. Phys. Lett.*, 20, 1972.

Kharkevitch, A., *Transient Wave Phenomena*. Nauka, Moscow, (Russian) 1952.

Kardo-Sysoev A., Human, V.B.S., Tchashnikov, I.G. & Reshetin, V.P., *IEEE Trans. on ED*, 11, 1976.

Kardo-Sysoev, A. et al, *Electronics Letters*, 17, 1981.

Kardo-Sysoev, A. et al, *Solid State Electronics*, 6, 695, 1985.

Kardo-Sysoev A., *Ultra-Wideband Electrodynamics*, Ioffe Physics and Technical Institute Press, St. Petersburg, Russian Federation, 1997.

Kardo-Sysoev, A., personal communication, 2000.

Kennaugh, E.M. & Moffatt, D.L., Transient and impulse response approximations. *Proc. IEEE*, Aug, 893-901, 1965.

Kim, A.H., Didomenico, L.D., Jasper, L.J., Youmans, R.J. & Koscica, T.E., Ultrawide-band high power photon triggered frequency independent radiator. U.S. Patent 5,227,621 dated July 13, 1993.

Kingsley, L.E., Weiner, M., Kim, A., Pastore, R., Youmans, R.J. & Singh, H., pp. 85-96 in Carin, L. & Felsen, L.B., (Eds.) *Ultra-Wideband Short-Pulse Electromagnetics 2*, Plenum, New York, 1995.

Kononov, A., Applications of tomographic methods for radar imaging using ultra-wideband signals. *Zarubezn. Radioelectronica*, Moscow, 1992 (Russian).

Kostylev, A., Identification of radar targets using UWB signals: Methods & Applications. *Zarubezn. Radioelectronica*, No 4, 1984 (Russian).

Krymscy V., Bucharin V. & Zaliapin V., *Theory of Nonsinusoidal Waves.* (Russian) Cheliabinsk State Technical University Press, Russian Federation, 1995.

Lahaie, I.J. (Ed.) *Ultrawideband Radar: Proceedings 22-23 Jan 1992*, SPIE Proceedings Series, vol. 1631, 1992.

Lee, C.H. (Ed.) *Picosecond Optoelectronic Devices*, Academic Press, NY 1984.

Lee, Y.W., Application of statistical methods to communication problems. *MIT Research Lab. Electronics Tech Rept,* 181, Sept 1, 1950.

Lee, Y.W., *Statistical Theory of Communication*, Wiley, NY, 1960.

Lee, Y.W. & Wiesner, J.B., Correlation functions and communication applications. *Electronics*, 23, 86-92, 1950.

Loubriel, G.M., Zutavern, F.J., Denison, G.J., Helgeson, W.D., McLaughlin, D.L., O'Malley, M.W. & Demarest, J.A., Photoconductive semiconductor switches for high power radiation. pp. 29-36 in Bertoni, H.L., Carin, L. & Felsen, L.B. (Eds.) *Ultra-Wideband Short-Pulse Electromagnetics*, Plenum Press, 1993.

Loubriel, G.M., Zutavern, F.J., O'Malley, M.W., Gallegos, R.R. & Helgeson, W.D. pp. 33-39 in Carin, L. & Felsen, L.B. (Eds.) *Ultra-Wideband, Short-Pulse Electromagnetics 2*, Plenum Press, NY, 1995.

Malmstadt, H.V. & Enke, C.G., *Electronics for Scientists*, Benjamin, New York, 1963.

McEwan, T.E., Ultra-wideband radar motion sensor. US Patent 5,361,070 dated November 1, 1994.

McEwan, T.E., Reexamination Certificate (4084th) B1 5,361,070, Certificate Issued May 16th, 2000.

Meleshko, E.A., *Nanosecond Electronics in Experimental Physics*, Ehnergoatomizdat Press, Moscow, 1987.

Miller, E.K., (Ed.) *Time-Domain Measurements in Electromagnetics*, Van Nostrand Reinhold, 1986.

Moffatt, D.L. & Mains, R.K., Detection and discrimination of radar targets. *IEEE Trans. Antennas & Propag.*, AP-23, 358-367, 1975.

Moffatt, D.L. & Puskar, R.J., A subsurface electromagnetic pulse radar. *Geophysics*, 41, 506-518, 1976.

Morey, R.N., Geophysical survey system employing electromagnetic impulses. US Patent 3,806,795, April, 1974.

Morgan, M.A., Singularity expansion representation of fields and currents in transient scattering. *IEEE Trans. Antennas & Propag.*, AP-32, 466-473, 1984.

Mourou, G. & Knox, W., High power switching with picosecond precision. *Appl. Phys. Lett.*, 35, 1979.

Naidenov, A., *Spectrum Transformation of Nanosecond Pulse Transmitters*, Nauka, Moscow, 1978 (Russian).

Nicholson, A.M., Advances in subnanosecond pulse technology. *Physics & Electronics Dept, Royal Radar Establishment*, Sem., Malvern, England, Jan 13th, 1972.

Noel, B., (Ed.), *Ultra-Wideband Radar: Proceedings of the First Los Alamos Symposium*, CRC Press, Boca Raton, FL, 1991.

Nunnally, W.C. & Edwards, R.N. Generation and radiation of high power impulses for wideband radar systems. pp. 217-226 in Noel, B., (Ed.), *Ultra-Wideband Radar: Proceedings of the First Los Alamos Symposium*, CRC Press, Boca Raton, FL, 1991.

Osipov M. Ultra-wideband radar. (Russian) *Radiotechnica*, 3, 3-6, 1995.

Pearson, L.W., A note on the representation of scattered fields as a singularity expansion. *IEEE Trans. Antennas & Propag.*, AP-32, 520-524, 1984.

Platts, D., Gigawatt Marx Bank Pulsers. pp. 241-5 in Noel, B., (Ed.), *Ultra-Wideband Radar: Proceedings of the First Los Alamos Symposium*, CRC Press, Boca Raton, FL, 1991.

Platts, D., Zucker, O.S.F. & McIntyre, I.A., Transmitters, pp. 109-144 in Taylor, J.D. (Ed.), *Introduction to Ultra-Wideband Radar Systems*, CRC Press, Boca Raton, FL, 1995.

Pocha, M.D., Druce, R.L. & Griffin, K.L., Subnanosecond photoconductive switching in GaAs. pp. 229-239 in Noel, B., (Ed.), *Ultra-Wideband Radar: Proceedings of the First Los Alamos Symposium*, CRC Press, Boca Raton, FL, 1991.

Raemer, H.R. & Reich, A.B., Correlation devices detect weak signals. *Electronics*, 32, 58-60, 1959.

Robbins, K.W., Short baseband pulse receiver. U.S. Patent 3,662,316 dated May 9, 1972.

Robbins, K.W. & Robbins, G.F., Stable base-band superregenerative selective receiver. U.S. Patent 3,794,996 dated Feb 26, 1974.

Rosen, A. & Zutavern, F. (Eds.) *High-Powered Optically Activated Solid State Switches*, Artech House, Boston, 1994.

Ross, G.F., A Time Domain criterion for the design of wideband radiating elements. *IEEE Trans. on Antennas & Propagation*, 16, 355, 1968.

Ross, G.F., Transmission and reception system for generating and receiving base-band duration pulse signals for short base-band pulse communication system. U.S. Patent 3,728,632 dated Apr 17, 1973a.

Ross, G.F., Energy amplifying selector gate for base-band signals. U.S. Patent 3,750,025 dated July 31, 1973b.

Ross, G.F. *et al*, A time domain electromagnetics bibliography. Sperry Research Center, Report SCRC-RR-75-1, Mar. 1975.

Ross, G.F., Early developments and motivations for time-domain analysis and application. Pp. 1-44 E.K. Miller (Ed.) *Time-Domain Measurements in Electromagnetics*, Van Nostrand Reinhold, New York, 1986.

Ross, G.F. & Lamensdorf, D., Balanced radiator system, U.S. Patent 3,659,203 dated Apr, 25, 1972.

Ross, G.F. & Mara, R.M., Coherent processing tunnel diode ultra wideband receiver. U.S. Patent 5,337,054 dated Aug. 9, 1994.

Ross, G.F. & Robbins, K.W., Base-band radiation and reception system. U.S. Patent 3,739,392 dated June 12, 1973.

Ross, G.F. & Robbins, K.W., Narrow range-gate baseband receiver. U.S. Patent 4,695,752 dated Sep 22, 1987.

Rudnick, P., The detection of weak signals by correlation methods. *J. Appl. Phys.*, 24, 128-131, 1953.

Sarkar, T., Adve, R. & Wicks, M., Photoconductive switching-revisited. pp. 51-55 in Bertoni, H.L., Carin, L. & Felsen, L.B. (Eds.) *Ultra-Wideband Short-Pulse Electromagnetics*, Plenum Press, 1993.

Shatz, S. *Transistors in Pulse Technology*, Sudgiz, Leningrad, 1963.

Shirman, Ja et al, On the first domestic investigation of UWB radar. *Radiotechnika*, No 1, 1991 (Russian).

Singleton, H.E., A digital electronic correlator. *Proc. IRE*, 138, 1422-1428, 1950.

Skolnik, M.I., *Introduction to Radar Systems*, 1st Edition, McGraw-Hill Book Co, New York, 1962.

Smith, R.J., *Circuits, Devices and Systems*, Wiley, New York, 1966.

Sobol, H., Microwave communications - an historical perspective. *IEEE Trans. Microwave Theory and Techniques*, MTT-32, 1170-1181, 1984.

Sodin, L., Pulsed antenna radiation: electromagnetic missile. (Russian) *Radiotechnology & Electronics (Russian Academy Magazine)* 5, 1014-1022, 1991.

Sodin, L., Characteristics of pulsed antenna radiation: electromagnetic missile. (Russian) *Radiotechnology & Electronics (Russian Academy Magazine)* 5, 849-857, 1992.

Stryukov, B., Lukyannikov, A., Marinetz, A. & Feodorov, N., Short impulse radar systems. (Russian) *Zarubezhnaya Radioelectonika*, 8, 42-59, 1989.

Taylor, J.D. (Ed.), *Introduction to Ultra-Wideband Radar Systems*, CRC Press, Boca Raton, FL, 1995.

Tektronix, Inc., S.W. Millikan Way, P.O. Box 500, Beaverton, Oregon 97005: *Instruction Manual: Type S-2 Sampling Head*, 1968.

Tikhonov, A.N. & Arsenin, V., *Methods for Solving Ill-Posed Problems*, Nauka, Moscow, 1986 (Russian).

Tikhonov, A.N. & Goncharsky, A.V., (eds) *Ill-Posed Problems in the Natural Sciences*, MIR, Moscow, 1987 (English).

Vaidyanathan, P.P., *Multirate Systems and Filter Banks*, Prentice Hall, New York, 1993.

Vainshtein, S.H., Zhilyaev, Y.V. & Levinstein, M.E., Visualization of sub-nanosecond switching of gallium arsenide diode structures. *Sov. Tech. Phys. Lett.*, 14, 664-5, 1988.

Van Blaricum, M.L., Problems and solutions associated with Prony's method for processing transient data. *IEEE Trans. Antennas & Propag.*, AP-26, 174-182, 1978.

Van Blaricum, M.L., A view of the early-time component in impulse scattering. pp. 191-202 in Noel, B., (Ed.), *Ultra-Wideband Radar: Proceedings of the First Los Alamos Symposium*, CRC Press, Boca Raton, FL, 1991.

Van Blaricum, M.L. & Mittra, A technique for extracting the poles and residues of a system directly from its transient response. *IEEE Trans. Antennas & Propag.*, AP-23, 777-781, 1975.

Van Etten, P., The present technology of impulse radars. *Int. Radar Conf. Proc.*, Oct, 535-539, 1977.

Varganov, M.E., Zinov'ev, Yu.S., Astanin, L.Ya., Kostylev, A.A., Sarychev, V.A., Siezkinskij, S.K., Dmitriev, B.D. *Radar Response of Flight Vehicles*, Moscow, Radio I Svyaz', 1985.

Yushkov, Yu., Badulin, N.N. A nanosecond pulse-compression microwave radar. *Electromagnetic Waves & Electronic Systems* (Russian) 2, 26-30, 1997.

Zernov, N., On the solution of transient boundary problems in electrodynamics. (Russian) *Dokl. Akad. Nauk USSR*, 30 (1), 1951.

Zernov N. & Merkulov G., Energy characteristics of aperture antennas: radiating nonharmonical waves. (Russian) *Radiotechnica* 1, 68-71, 1991a.

Zernov N. & Merkulov G., Antennas in a mode of radiation (reception) of ultra-wideband signals. (Russian) *Zarubezhnaya Radioelectronika* 1, 84-94, 1991b.

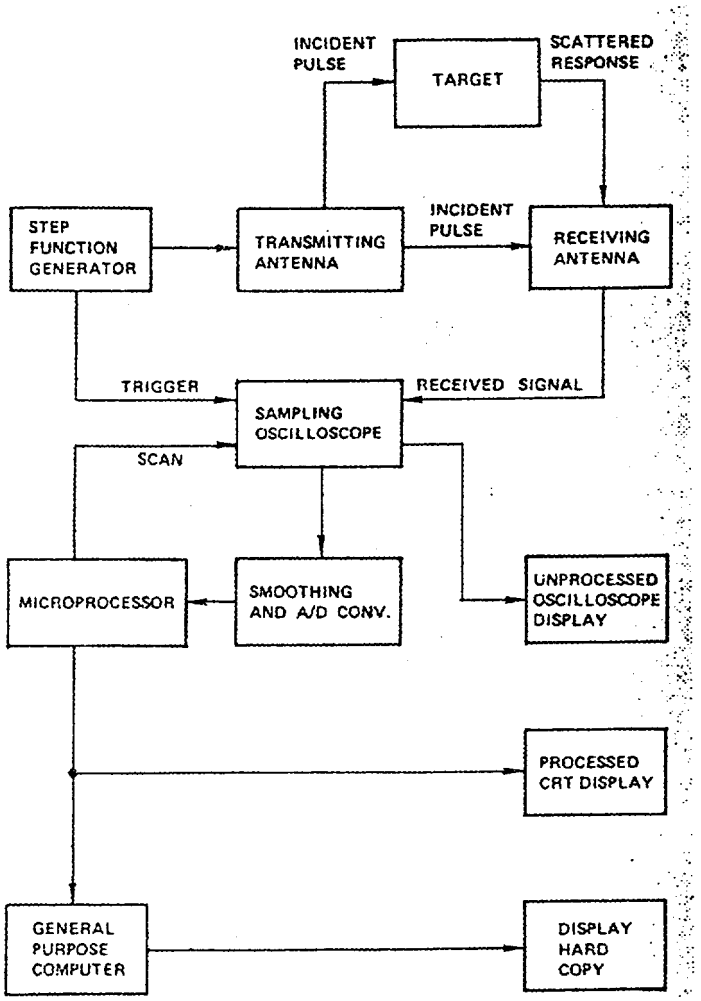

Fig. 1.1 Functional block diagram of UWB system. From Bennette & Ross (1978), Fig. 7.

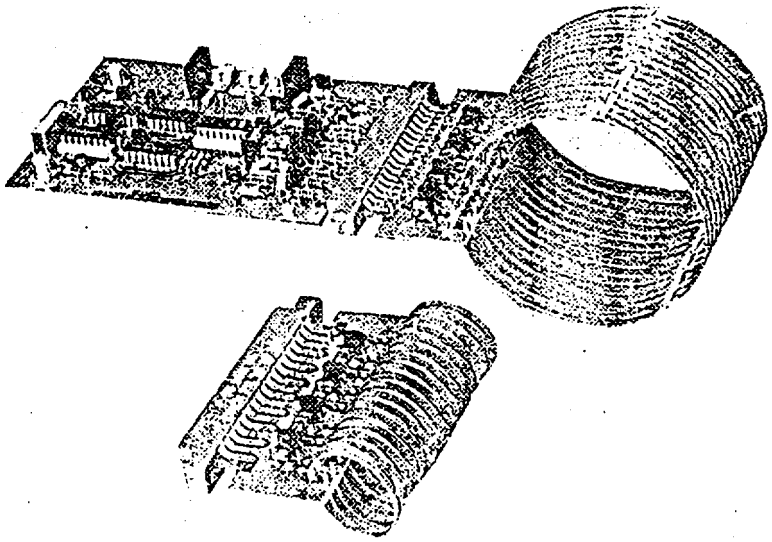

FIG. 343-4. Experimental magnetic loop radiators with driving circuits. (Courtesy J. Chapman, Terrestrial Systems Inc., Lexington, Massachusetts.)

Fig. 2.1.1 Magnetic loop radiator with driving circuits (J. Chapman Terrestrial Systems, Inc. Lexington, MA). From Harmuth, H.F. *Sequency Theory*, Academic Press, 1977, page 301.

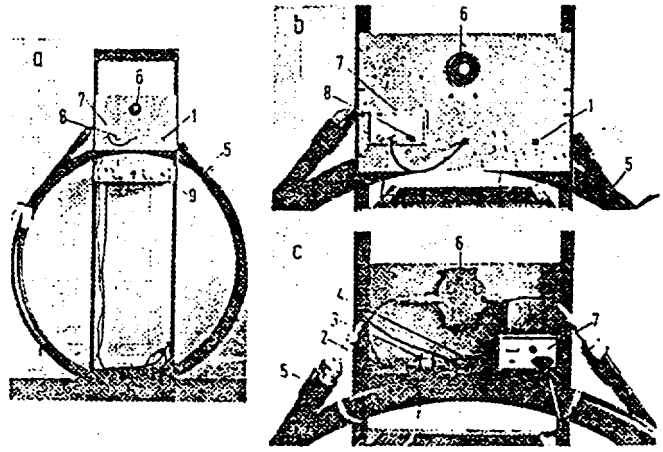

FIG. 352-3. Front view of a selective receiver for electromagnetic Walsh waves (a), and details of the panel seen from front (b) and rear (c). 1, antenna input terminal, 2, wide-band hybrid coupler; 3, wide-band amplifier; 4, wide-band hybrid coupler; 5, coaxial delay line; 6, attenuator; 7, wide band output amplifier; 8, output terminal to sampling oscilloscope; 9, power supply. This equipment contains no line stretcher. (Courtesy J. Lally and Y. K. Hong, The Catholic University of America, Washington, D.C.)

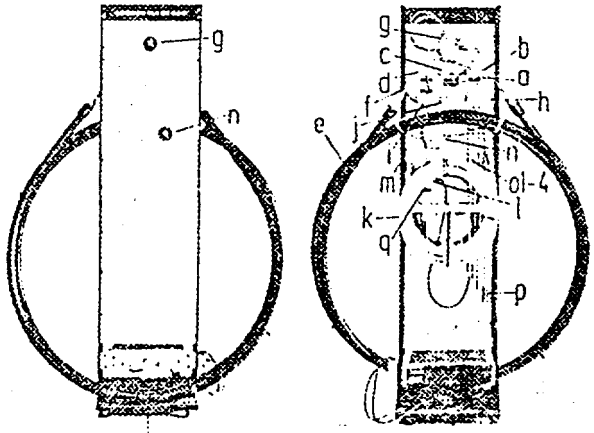

FIG. 352-4. Received Walsh wave displayed by the sampling oscilloscope in Fig. 352-2 (top), and the same wave (a) showing the effect of an aluminum reflector that produces delayed Dirac pulses (b) with reversed amplitude (bottom). The period of the wave is 50 nsec, the switching time ΔT about 1 nsec.

Fig. 2.1.2 Selective receiver. From Harmuth, H.F., *Sequency Theory*, Academic Press, NY 1977, page 317.

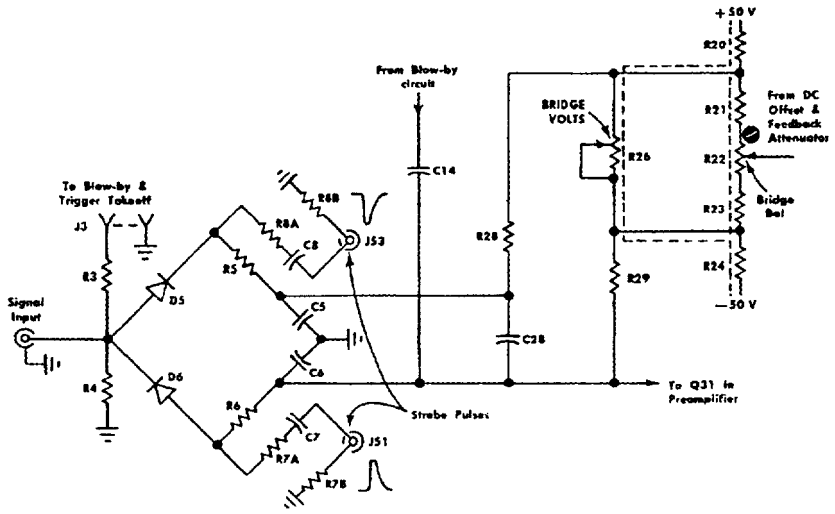

Fig 2.4.2.1 Sampling bridge circuit and Bridge Volts and Bridge Bal circuits. From *Instruction Manual, Type S-2 Sampling Head*, Tektronix, Inc., 1968.

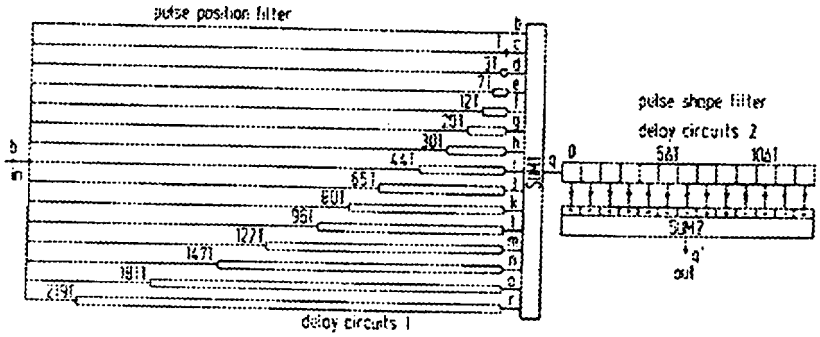

FIG. 4.6-5. Principle of the pulse compression for the reception of signals according to Fig. 4.6-2. The pulse position filter compresses the 15 pulses of line (b), Fig. 4.6-2, into 1, the pulse shape filter compresses the 13 pulses of line (c) by means of cross correlation.

Fig 2.4.6.1 Pulse compression principles. Fig 4.6-5 from H.F. Harmuth, *Nonsinusoidal Waves for Radar and Radio Communication*, Academic, 1981, p. 143.

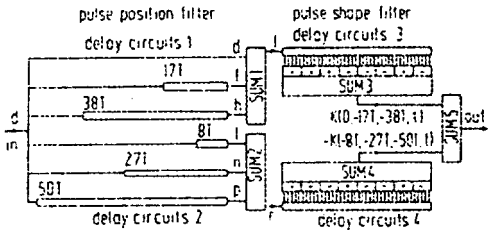

FIG. 6.2-2. Receiver for the signal of line d in Fig. 6.2-1. The pulse position filter is implemented by delay circuits and summers, while the pulse shape filter is implemented by two sliding correlators and a summer (SUM).

Fig. 2.4.6.2 Receiver. Fig 6.2-2 from H.F. Harmuth, *Nonsinusoidal Waves for Radar and Radio Communication*, Academic, 1981, p. 288.

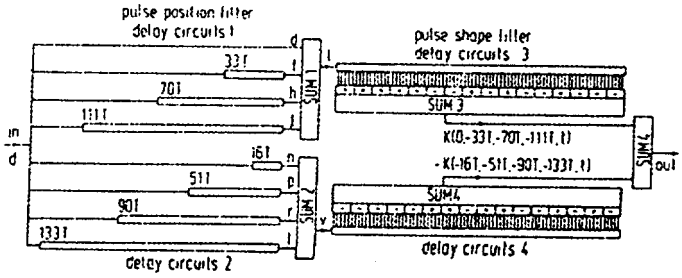

FIG. 6.2-5. Receiver for the signal of line d in Fig. 6.2-4. The delay circuits 3 and 4 with the summers SUM3 and SUM4 form two sliding correlators.

Fig 2.4.6.3 Receiver. Fig 6.2-5 from H.F. Harmuth, *Nonsinusoidal Waves for Radar and Radio Communication*, Academic, 1981, p. 293.

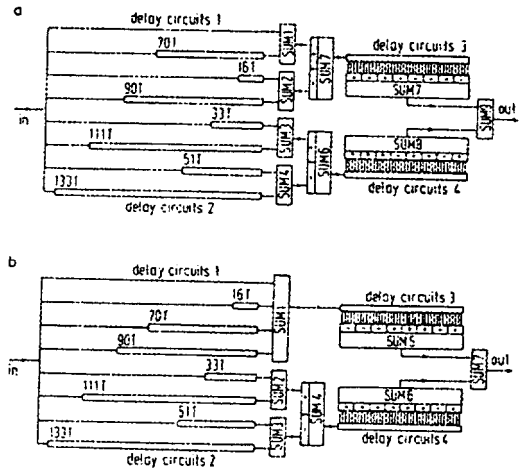

FIG. 6.2-8. Receivers for the signals in line d of Fig. 6.2-7 (a) and for the signal in line g (b).

Fig 2.4.6.4 Receivers. Fig 6.2-8 from H.F. Harmuth, *Nonsinusoidal Waves for Radar and Radio Communication*, Academic, 1981, p. 297.

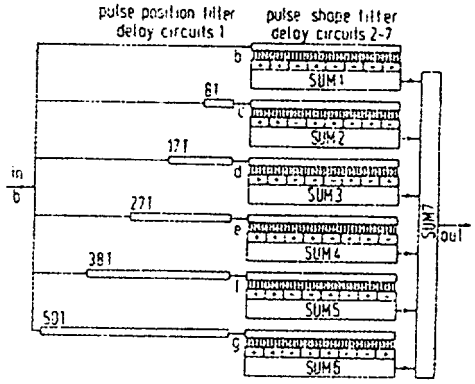

FIG. 6.2-12. Receiver for the signal of Fig. 6.2-11 requiring six sliding correlators. SUM, summer.

Fig 2.4.6.5 Receiver. Fig 6.2.12 from H.F. Harmuth, *Nonsinusoidal Waves for Radar and Radio Communication*, Academic, 1981, p. 302.

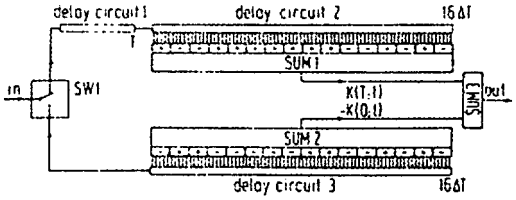

FIG. 6.2-15. Receiver for the signal of Fig. 6.2-14. SUM, summer; SWI, switch.

Fig 2.4.6.6 Receiver. Fig 6.2-15 from H.F. Harmuth, *Nonsinusoidal Waves for Radar and Radio Communication*, Academic, 1981, p. 305.

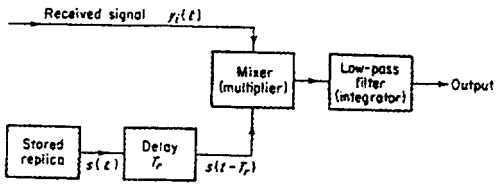

Figure 10.3 Block diagram of a cross-correlation receiver.

Fig 3.0.1 Cross-correlation receiver. From Skolnik, M.I., *Introduction to Radar Systems*, McGraw-Hill, NY, 1962, p. 375.

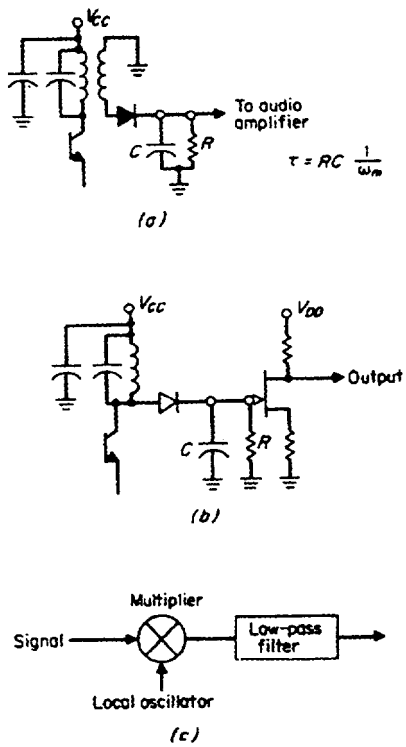

Fig. 14-86. AM detectors: (*a*) AM envelope detector; (*b*) peak detector; (*c*) product detector.

Fig 3.0.2 Detectors. Fig 14-86 from Fink, D.G. & Christiansen, D., *Electronics Engineer's Handbook*, McGraw-Hill, NY, 1975.

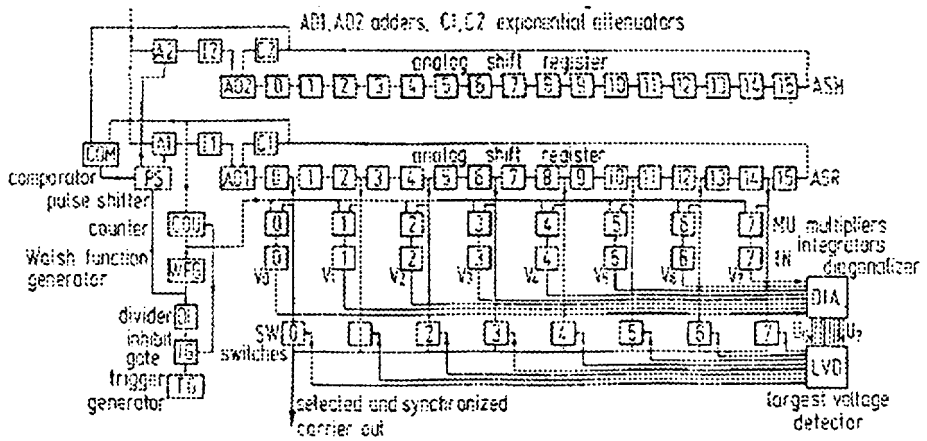

Fig. 189. Block diagram of a synchronous receiver for electromagnetic Walsh waves.

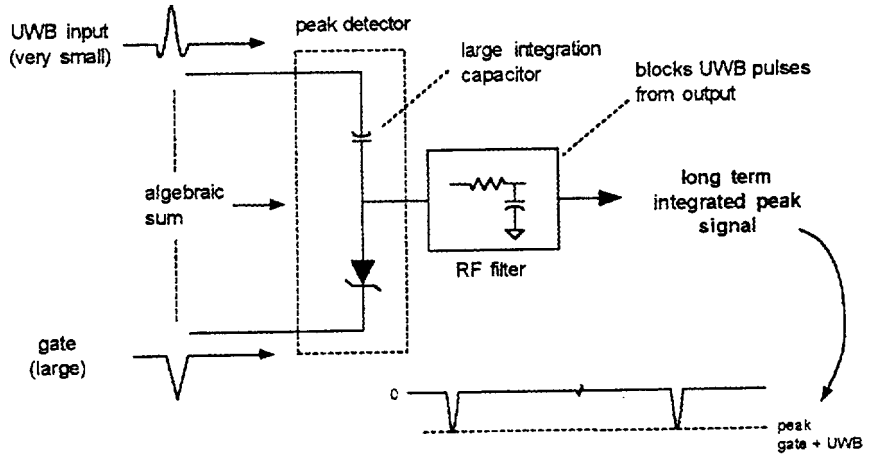

MIR receiver: add and peak detect (McEwan)

Fig. 3.0.3 MIR receiver. After McEwan, T.E., *Ultra-wideband radar motion sensor*. US Patent 5,361,070 dated November 1, 1994.

Fig. 4.0.1 Tektronix Type S-2 Sampling Head. From *Tektronix Instruction Manual for Type S-2 Sampling Head*, Copyright 1968 by Tektronix, Inc., Beaverton, Oregon.

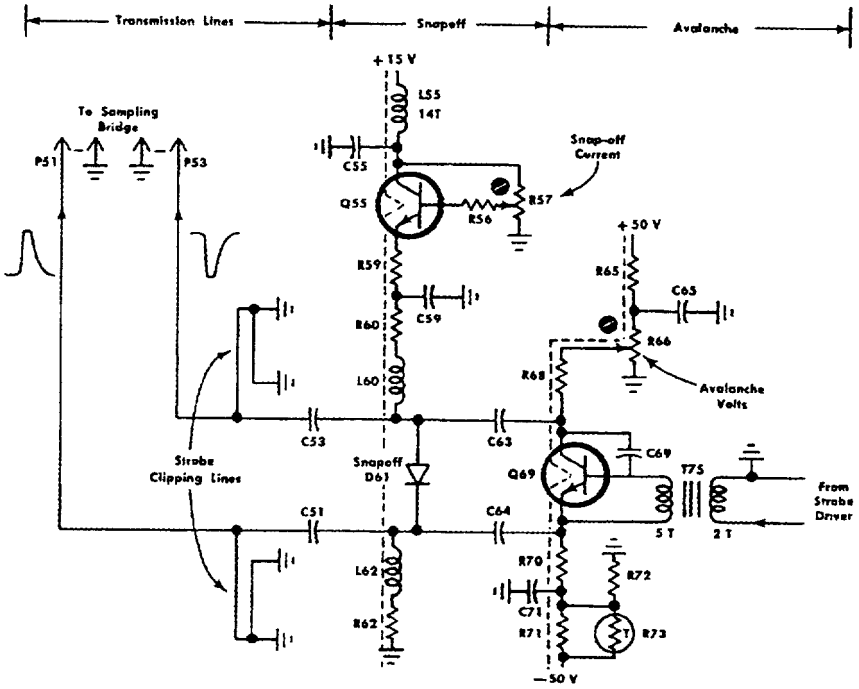

Fig. 4.0.2 Strobe Generator Circuits. *From Tektronix Instruction Manual for Type S-2 Sampling Head*, Copyright 1968 by Tektronix, Inc., Beaverton, Oregon.

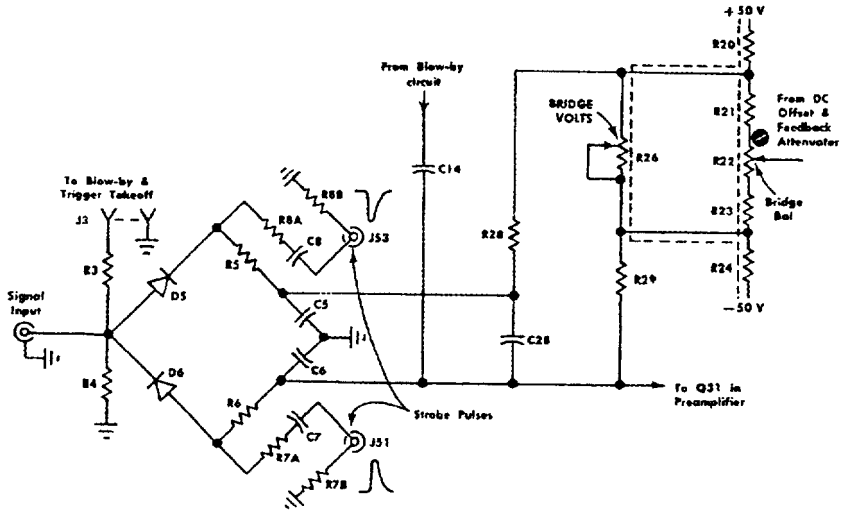

Fig. 4.0.3 Sampling Bridge Circuit and Bridge Volts and Bridge Bal Circuits. From *Tektronix Instruction Manual for Type S-2 Sampling Head*, Copyright 1968 by Tektronix, Inc., Beaverton, Oregon.

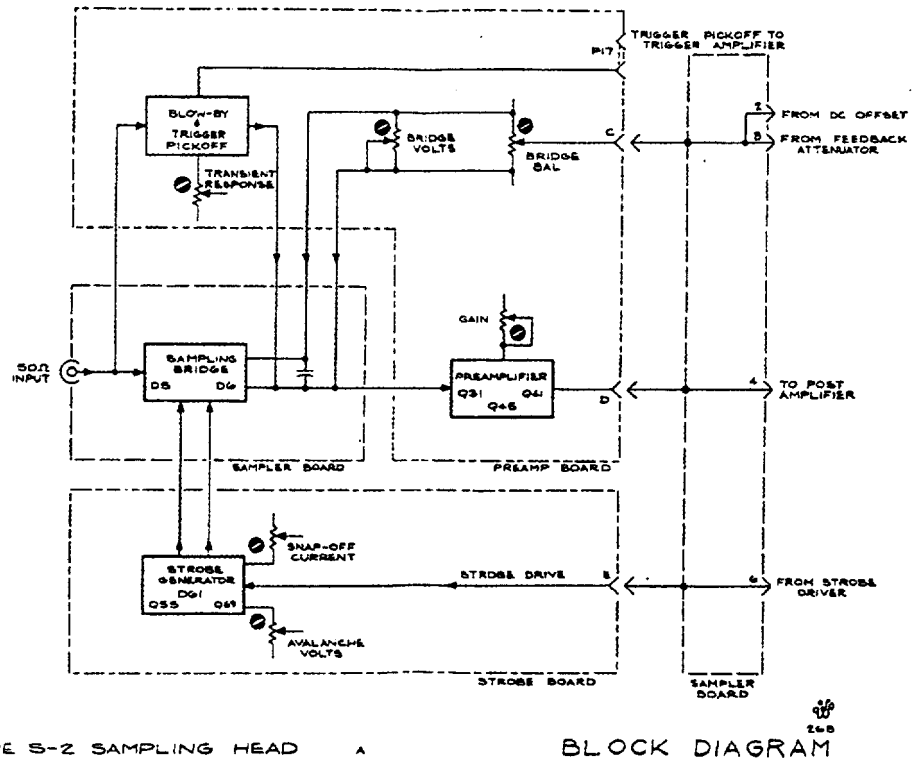

Fig. 4.0.4 Blow-by and Trigger Pickoff. From *Tektronix Instruction Manual for Type S-2 Sampling Head*, Copyright 1968 by Tektronix, Inc., Beaverton, Oregon.

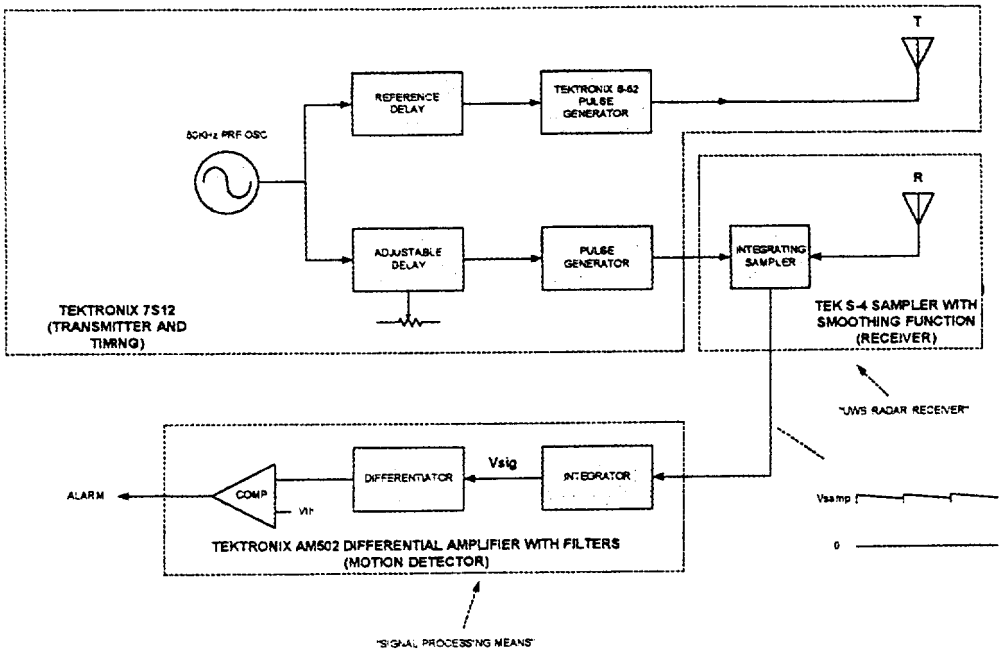

Fig. 4.0.5 UWB system constructed of purchased 1975 Tektronix components.

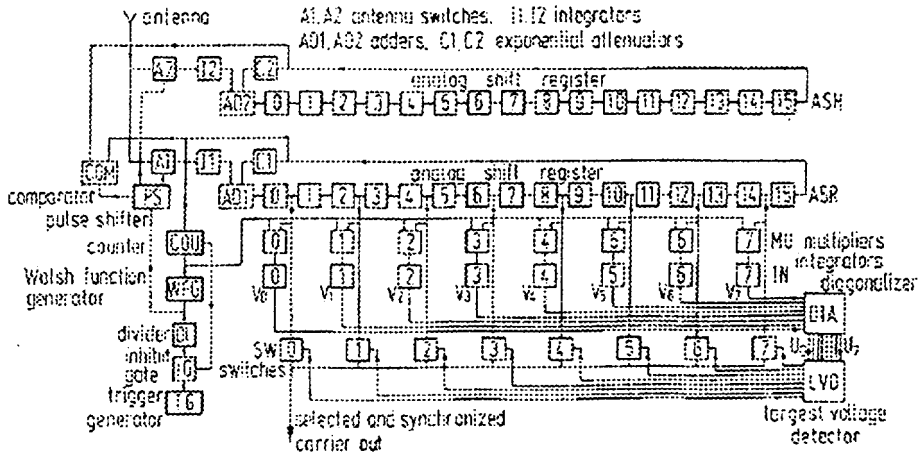

Fig. 189. Block diagram of a synchronous receiver for electromagnetic Walsh waves.

Fig 5.0.1 Synchronous receiver. Fig 189 from Harmuth, H.F., *Transmission of Information by Orthogonal Functions*, 2nd Edition, Springer, NY, 1972, p. 289.

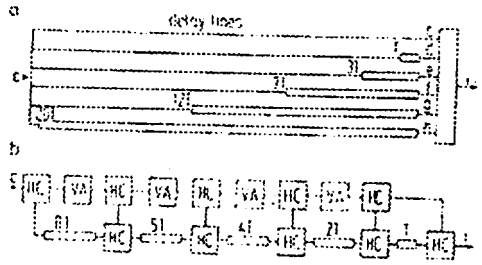

FIG. 366-2. Compression of six pulses into one. (a) Principle of the circuit; (b) practical circuit. SUM, summer; HC, hybrid coupler, VA, variable amplifier (amplifier plus adjustable attenuator).

Fig 5.0.2 Circuit for many-to-one, or compression of six pulses in to one. From Harmuth, H.F., *Sequency Theory*, Academic Press, New York 1977. p. 341, Fig 366-2.

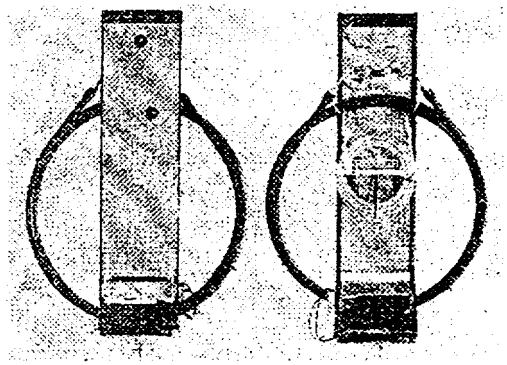

Fig. 9. Front and rear view of a receiver for electromagnetic Walsh waves. The delay lines are the tuned elements for the carrier period T.

Fig 5.0.3 Receiver for "Walsh waves" – UWB signals. From Harmuth. H.F., Range-Doppler Resolution of Electromagnetic Walsh Waves in Radar. *IEEE Trans. Electromagn. Compat.*, EMC-17, 106-111, 1975, Fig 9.

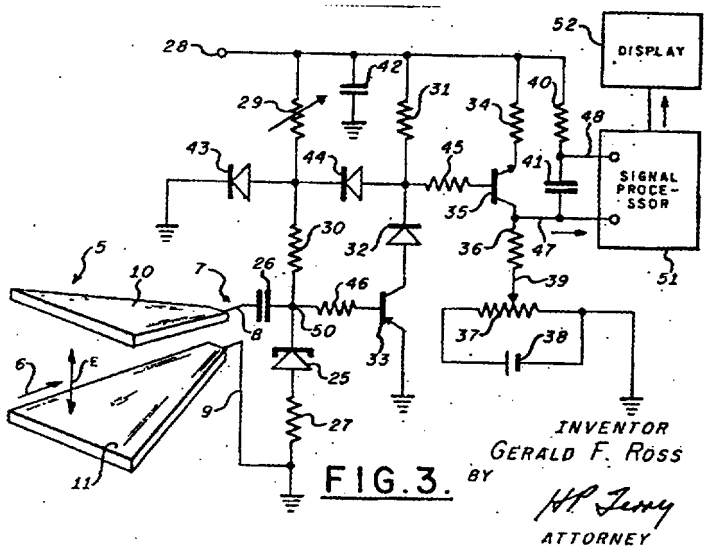

Fig 6.0.1 Circuit diagram showing circuit components of a UWB receiver. From Ross, G.F. Transmission and reception system for generating and receiving base-band duration pulse signals for short base-band pulse communication system. U.S. Patent 3,728,632 dated Apr. 17, 1973a.