CARL T. JONES
CORPORATION

FM RECEIVER INTERFERENCE TEST RESULTS REPORT

Prepared for: The National Association of Broadcasters

July, 1999

Carl T. Jones Corporation
7901 Yarnwood Court, Springfield, Virginia 22153-2899 (703) 569-7704 Fax: (703) 569-6417

TABLE OF CONTENTS

FM RECEIVER INTERFERENCE TEST RESULTS REPORT

Sections		Page
1.0	Introduction	1
2.0	Test Methodology	2
3.0	Description of the Test System and Parameters	3
3.1	Desired Signal	3
3.2	Undesired Signal	5
3.3	Desired Signal Levels	6
3.4	S/N Measurement	9
3.5	D/U Measurement	11
4.0	Test Procedure	11
4.1	Test System Setup and Calibration	11
4.1.1	Desired Signal Modulation Level Calibration	12
4.1.2	Undesired Signal Modulation Level Calibration	13
4.1.3	Test System S/N Ratio Verification	13
4.1.4	Desired Signal Amplitude Calibration	14
4.2	Measurement Procedure	15
4.2.1	Adjustment of Desired Signal Power	15
4.2.2	D/U Measurement	15

TABLE OF CONTENTS (Continued)

Sections | Page

5.0 Test Results 18

5.1 Test Samples 18

5.2 General Discussion of Test Results 19

5.3 Third Adjacent Channel Test Results 22

5.4 Second Adjacent Channel Test Results 27

Figures

1 FM Receiver Test Configuration 4

2 Spectral Plot of Desired and Undesired Signals 7

3 Frequency Response of the CCIR Weighting Filter 10

Tables

1 Number of Receivers Tested in Each Receiver Category 19

2 Signal to Noise Ratio without Interference 21

3 D/U Ratio Required to Produce Interference
-45 dBm Desired Signal Level 23

4 D/U Ratio Required to Produce Interference
-55 dBm Desired Signal Level 24

5 D/U Ratio Required to Produce Interference
-65 dBm Desired Signal Level 25

6 Median Receiver Performance by Category
3rd Adjacent Channel Interference 26

7 Median Receiver Performance by Category
2nd Adjacent Channel Interference 28

Appendices

A Description of FM Receivers Tested

B Graphical Presentation of Receiver Interference Test Results

CARL T. JONES
CORPORATION

FM RECEIVER INTERFERENCE TEST RESULTS REPORT

Prepared for: The National Association of Broadcasters

1.0 Introduction

In its Notice of Proposed Rulemaking, MM Docket No. 99-25, the FCC proposes to establish rules authorizing a new low power FM service. In order to allow for a substantial number of low power stations, particularly in medium to large markets, the FCC proposes to eliminate and/or modify the present 2nd and 3rd adjacent channel protection requirements to and from existing full service stations.

In response to the Notice, the National Association of Broadcasters (NAB) initiated a technical evaluation of the FCC proposal to determine the potential for interference to existing stations should the new low power service be authorized. The first step in the NAB's technical evaluation was to determine the susceptibility of modern FM receivers to co-channel and adjacent channel interfering signals. To accomplish this step, the NAB contracted the Carl T. Jones Corporation to develop a test methodology, design test procedures, assemble a test facility and perform interference tests on a sample population of 28 modern FM receivers. This report describes the test methodology, the test procedures, and the test facilities which were developed and presents the results of the FM receiver interference tests.

Carl T. Jones Corporation
7901 Yarnwood Court, Springfield, Virginia 22153-2899 (703) 569-7704 Fax: (703) 569-6417

2.0 Test Methodology

The test methodology developed to establish the susceptibility of modern FM receivers to co-channel and adjacent channel interference is based on an objective measurement of the receiver output signal to noise (S/N) ratio with and without an interfering signal present. A comparison of the S/N ratio measurements establishes the degree of performance degradation which results from the presence of the interfering signal. This methodology was derived from the methods developed by the International Telecommunications Union-Radiocommunications (ITU-R), formerly the CCIR, as defined in ITU-R Recommendation 641 entitled, "Determination of Radio-Frequency Protection Ratios for Frequency-Modulated Sound Broadcasting".

The test methodology requires that a desired signal be generated and input to the FM receiver at a specified frequency and input signal level. With no interfering signal present, the S/N ratio is measured at the receiver's output terminals. A low level interfering signal (undesired signal) is then input to the receiver in combination with the desired signal. The frequency of the undesired signal is selected to have the proper relationship with that of the desired signal.

The undesired interfering signal level is then increased and the measured receiver S/N ratio is observed on an audio analyzer. At the point at which the receiver S/N ratio is reduced by 5 dB[1], the undesired signal level is measured and the desired to undesired (D/U) signal ratio calculated. If a receiver exhibits an S/N ratio greater than 55 dB, with

---

[1] For the purpose of this test methodology, a reduction in receiver output S/N ratio of 5 dB or a reduction in receiver output S/N ratio to an absolute value of 50 dB, whichever is the greater reduction, is the point at which interference occurs. This definition of interference is based on studies performed by Moffett, Larson & Johnson, Inc., as described in the report entitled, "Standard of Service and Selection of Receivers for FM Receiver Testing in Support of Comments of the National Association of Broadcasters".

no interfering signal present, the procedure is modified to allow for greater than a 5 dB reduction to an absolute S/N ratio of 50 dB.

3.0 Description of the Test System and Parameters

A discussion of the key elements of the test system and test parameters is contained in the following paragraphs, providing information on the modulation type and level, the desired and undesired signal amplitudes and frequencies, the test equipment, and the measurement techniques employed.

3.1 Desired Signal

An overall block diagram of the FM receiver test configuration is shown in Figure 1. The desired FM signal is generated using a Broadcast Electronics (BE), Lynx model, stereo generator and a BE, Model FX50, FM exciter. The left channel of the desired FM stereo signal is modulated with a precision 1000 Hz audio tone, generated by a Hewlett Packard, Model 8903B, audio analyzer. The input to the right channel of the stereo generator is terminated in a balanced 600 Ohm load. No limiting is used for the desired signal and 75 microsecond pre-emphasis is employed.

Modulation of the desired signal is adjusted to 100% (75 kHz deviation) as indicated on the Belar, Model FMSA-1, modulation monitor/analyzer and/or the Hewlett Packard, Model 8901B, modulation analyzer. The desired channel frequency, selected for the FM interference tests, is 96.7 MHz. This frequency was selected based on the fact that no other local radio stations were assigned to this frequency and the frequency is near the center of the FM band.

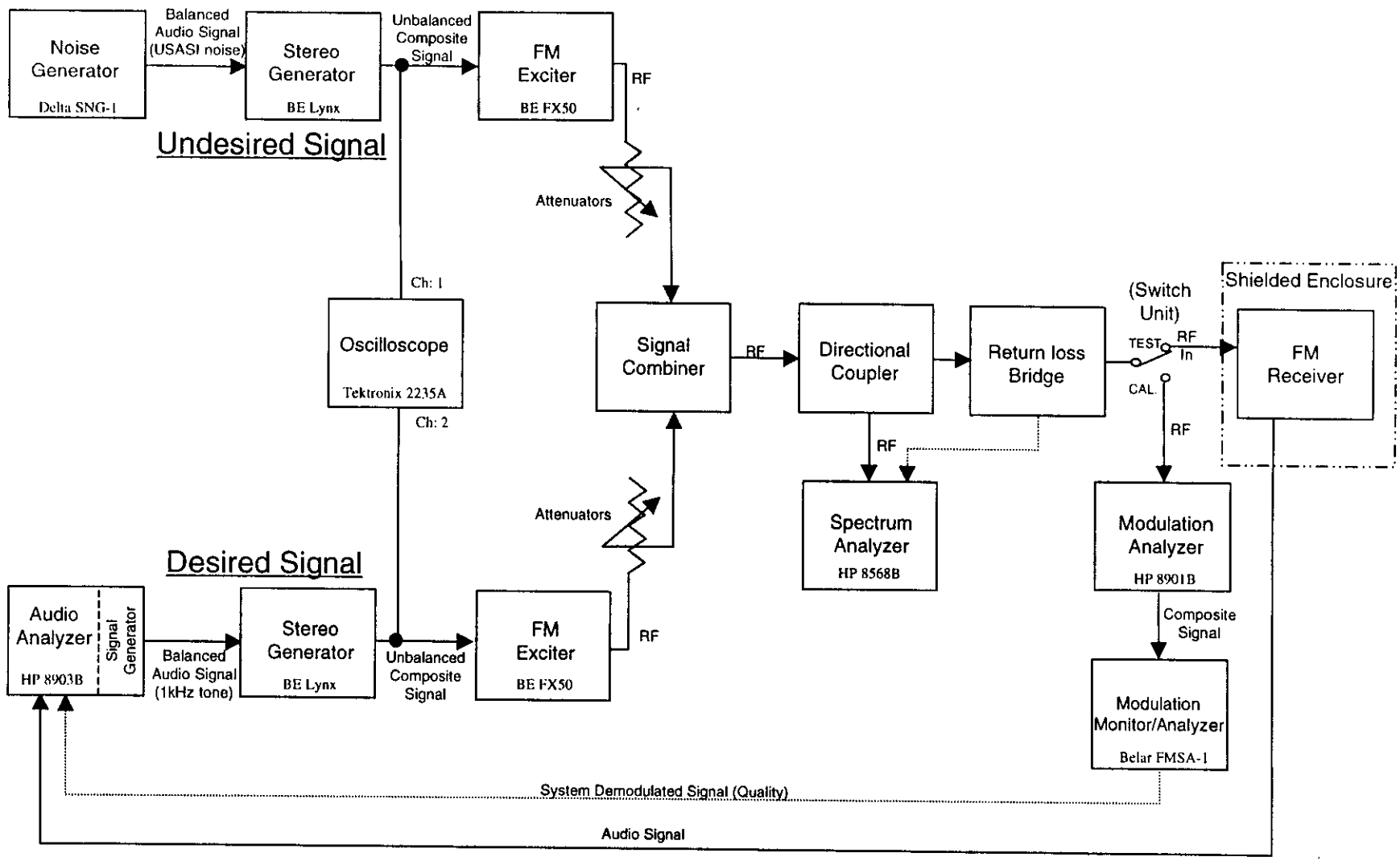

FM RECEIVER TEST CONFIGURATION

Figure 1

The power level of the FM signal at the output of the FM exciter is adjusted to a nominal level of 4 watts. In order to achieve the relatively low level signal required at the input to the FM receiver, the desired signal is attenuated by a series of precision fixed and variable attenuators. The signal is then input to the signal combiner where it is combined with the undesired signal and passed through a directional coupler and return loss bridge to the input of the receiver under test (RUT). The directional coupler allows monitoring of the desired and undesired signal levels on the spectrum analyzer and measurement of the resulting D/U signal ratio. The return loss bridge allows measurement of the reflected power from the receiver load impedance. This information is used to make corrections to the desired signal amplitude input to the RUT.

3.2 Undesired Signal

The undesired FM signal is generated using a second BE stereo generator and FM exciter, identical to that used for the desired signal. The undesired signal is modulated with a USASI (United States of America Standards Institute) noise signal. USASI noise consists of white noise which has been filtered to simulate the spectrum of unprocessed program material. The USASI noise generator used for this test was a Delta Electronics, Model SNG-1, noise generator. The noise generator produces both left and right stereo channels blended such that the subchannel level is 3 dB below that of the main channel (NRSC blending).

Limiting was employed to minimize the potential for excessive noise peaks. The limiter on the stereo generator was adjusted for 90% limiting. Pre-emphasis was selected for 75 microseconds. The level of the noise generator was adjusted to produce modulation

peaks between 95% and 100% as monitored on the Belar, Model FMSA-1, modulation monitor/analyzer.

A spectral plot of the desired and undesired signals is shown in Figure 2. In this case, the undesired signal frequency is the upper 3rd adjacent channel with respect to the desired channel. In the spectral plot, the level of undesired signal is approximately 40 dB greater than that of the desired signal. This desired to undesired (D/U) signal ratio is equivalent to the present FCC protection ratio for 3rd adjacent channel stations.

Seven different undesired frequencies were used for the test, corresponding to the following channel relationships with the desired signal: co-channel, +/- 1st adjacent, +/- 2nd adjacent, and +/- 3rd adjacent. Selection of each frequency was accomplished through adjustment of switches contained within the BE FM exciter.

The RF output of the undesired signal exciter was set to a nominal power level of 5 Watts and precision fixed and variable attenuators were used to attenuate the signal to the required level at the input to the RUT. After attenuation the undesired signal is combined with the desired signal and follows the identical path as the desired signal to the input of the RUT.

3.3 Desired Signal Levels

Tests were performed for three desired signal levels: -45 dBm, -55 dBm, and -65 dBm. These levels generally correspond to signal strength levels in the range of 60 - 80 dBuV/m for a receive antenna height of 1.5 meters above ground or 50 to 70 dBuV/m for a receive antenna height of 9 meters above ground.[2]

---

[2]Moffet, Larson & Johnson, Inc., "Standard of Service and Selection of Receivers for FM Receiver Testing in Support of Comments of the National Association of Broadcasters".

Figure 2

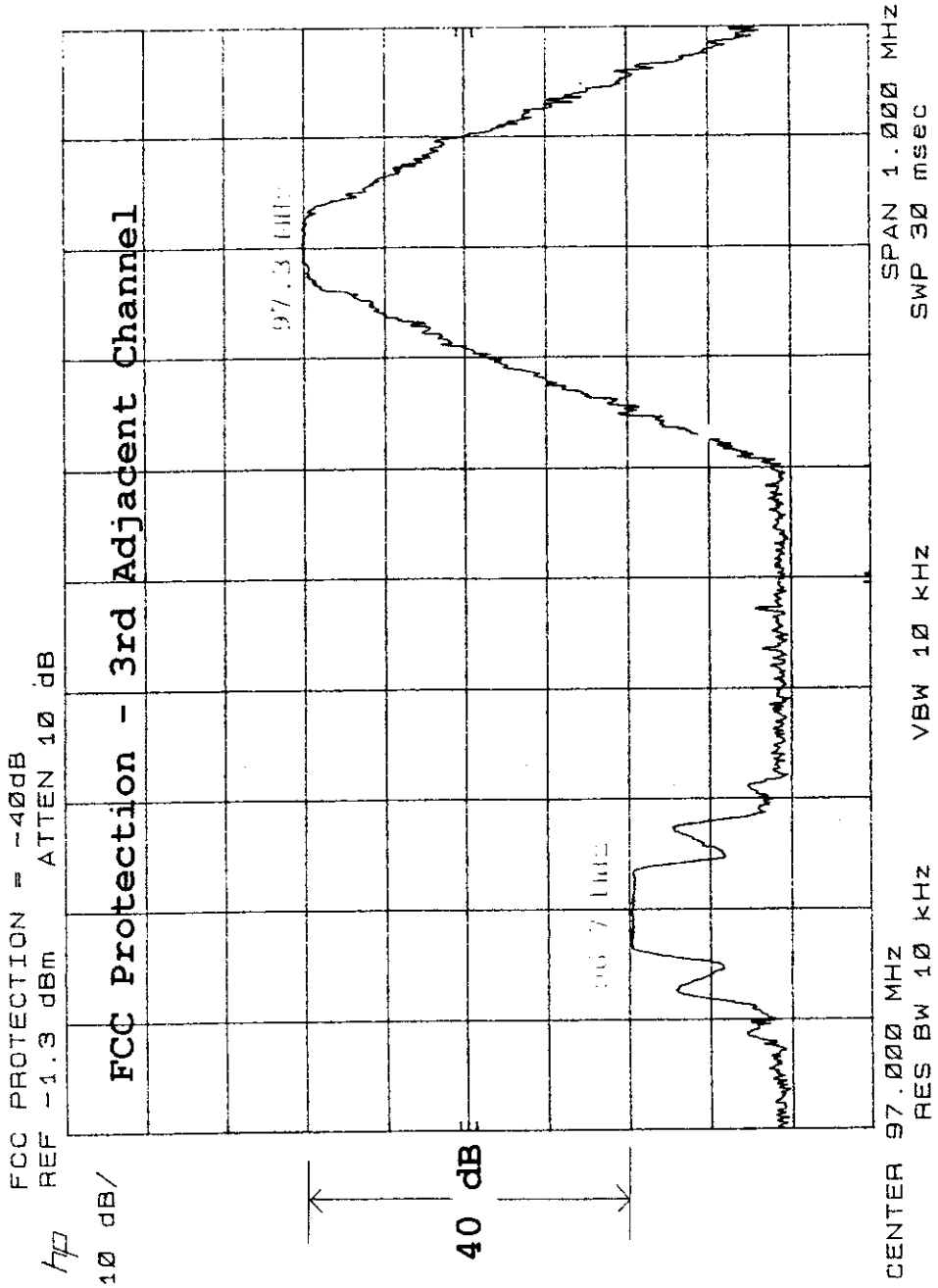

Spectral Plot of Desired and Undesired Signals (Undesired Signal - Upper 3rd Adjacent)

In order to achieve the proper power level at the input to each RUT, the system was first calibrated for a 50 Ohm termination in place of the RUT. The desired channel attenuators were adjusted to achieve the proper power as measured at the 50 Ohm termination. For each of the three power levels the output of the directional coupler was also measured using the spectrum analyzer and recorded. The directional coupler output measurements provided the reference levels which correspond to the three desired power levels for a matched 50 Ohm load.

For most receivers, the input impedance is unknown and, therefore, a second step is required in order to insure proper power input to the receiver. For each receiver tested, the return loss bridge was used to directly measure the reflected power from the receiver load. The input power level was then correspondingly increased to account for the measured loss.

Approximately 50% of the receivers tested were equipped with external antenna connectors. For these receivers the desired and undesired signals were input to the receiver via the connector. For the remaining receivers, the antenna terminal was located within the receiver chassis and a coaxial cable connection was required to be inserted between the antenna terminal and signal ground. The antenna was then disconnected and the coaxial cable was routed to the exterior of the receiver chassis and terminated in a connector. It was felt impractical to modify the "personal receivers"[3], in the above described manner and, therefore, the desired and undesired signals were input on the right speaker cable between the receiver and the headset.

---

[3]The term "personal receiver", as used in this report, refers to that category of miniature receivers which are designed to be attached to or worn on the body. These receivers are equipped with an integral headset.

3.4 S/N Measurement

The receiver output signal level and noise level were measured using the Hewlett Packard, Model HP 8903B, audio analyzer. The audio analyzer was connected to the RUT left speaker output via a coaxial cable and an audio isolation transformer. For RUT's with built-in speakers, cables were connected in parallel to the high and low side of the speaker cables and brought to the outside of the RUT chassis. For those RUT's with external speakers, the audio analyzer was connected to the left speaker output connector. Speakers were connected to the RUT's for all testing in order to present the proper load impedance and to monitor the audio output.

Special provisions were made in measuring the receiver noise signal. The audio analyzer was equipped with a special CCIR (ITU-R) weighting filter which approximates the response of human hearing. The frequency response of the CCIR weighting filter is shown in Figure 3.

Quasi-peak detection was used for the measurement of the noise voltage in accordance with ITU-R recommendations. This detection technique results in weighting signals as a function of repetition rate. Slower repetition rates receive less weight than higher repetition rates. According to the ITU-R Recommendation cited above, the combination of quasi-peak detection and the CCIR (ITU-R) weighting filter yields S/N ratio measurement results which more accurately correlate to perceived audio performance.

In addition to the CCIR weighting filter, a low pass filter having a 3 dB cutoff frequency of 30 kHz was also employed. The roll-off slope of the low pass filter was 18 dB per octave. The purpose of the low pass filter was to attenuate high frequency energy which was well outside of the frequency range of human hearing.

Figure 3

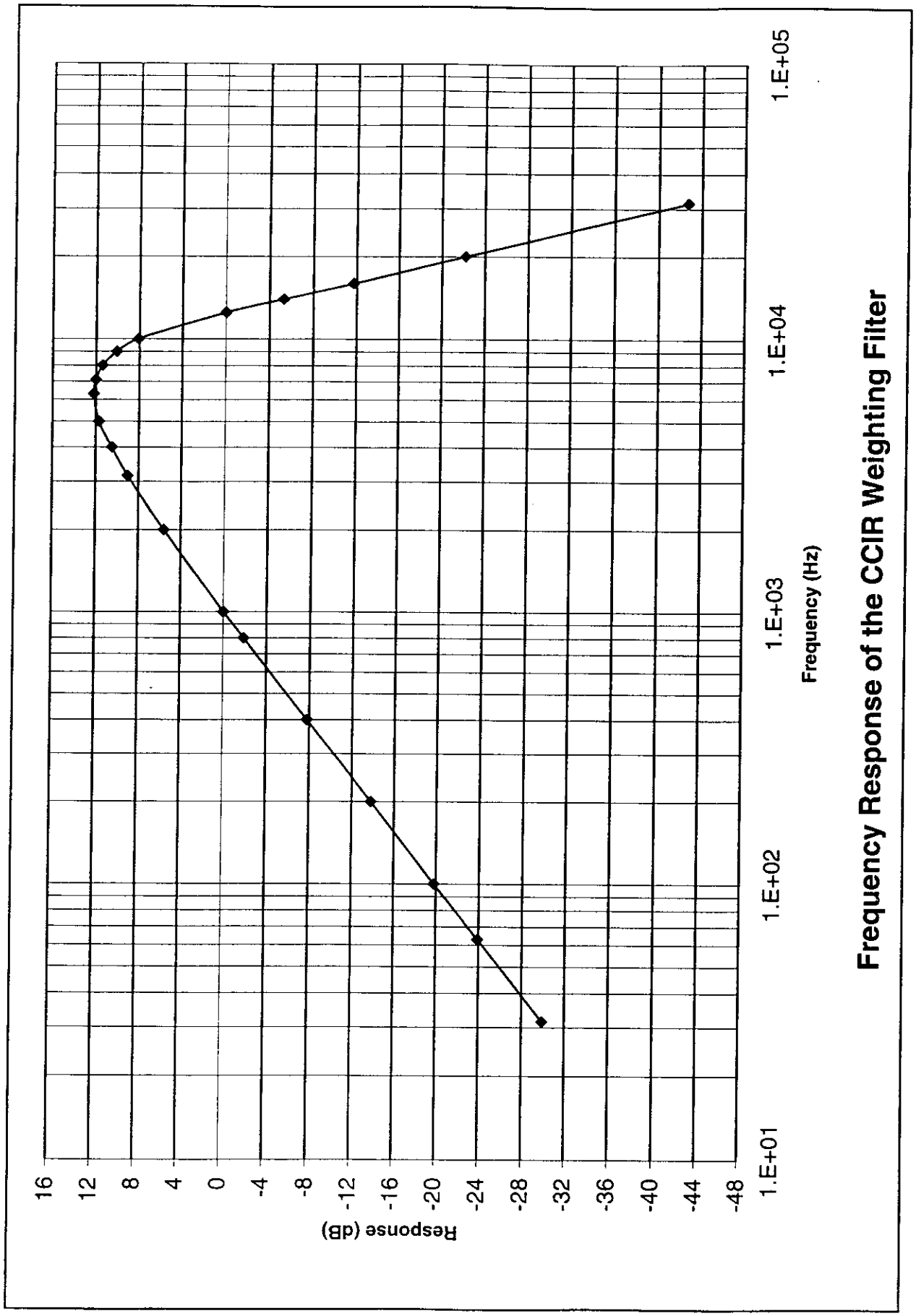
Frequency Response of the CCIR Weighting Filter
Response (dB)
16
12
8
4
0
-4
-8
-12
-16
-20
-24
-28
-32
-36
-40
-44
-48
1.E+01
1.E+02
1.E+03
1.E+04
1.E+05
Frequency (Hz)

3.5 D/U Measurement

Once the desired signal level was adjusted for the proper power to the receiver and the initial S/N ratio was measured, the undesired signal was input to the signal combiner at the selected undesired signal frequency. The spectrum analyzer span was adjusted such that both signals were visible on the display. The undesired signal level was increased until the S/N ratio was reduced to the target level (5 db reduction in S/N ratio or an absolute S/N ratio of 50 dB, dependant on the initial measured S/N ratio). The spectrum analyzer was then set on peak hold and the difference in the relative amplitudes of the desired and undesired signals was recorded. The difference in amplitudes of the two signals is the D/U ratio required to cause interference.

4.0 Test Procedure

This section of the report provides a more detailed description of the procedures used in performing the FM interference tests.

4.1 Test System Setup and Calibration

The test system was configured as shown in the FM receiver test configuration block diagram of Figure #1. The measurement and signal generation equipment was located outside of the shielded enclosure. The RUT was located inside of the shielded enclosure. The desired and undesired test signals supplied to the RUT, and the audio output signal from the RUT, entered and exited the shielded enclosure via coaxial cables. For certain receiver types, it is important to isolate the audio output cable from ground, therefore, an audio isolation transformer was used for this signal path. Proper shielding

is extremely important in the test setup to minimize error due to unintentional radiation from the desired and undesired FM exciters and associated cabling and to minimize any influence of external signals from local FM stations.

After verifying proper connections throughout the system, the individual test equipment setups and calibrations were performed using the procedures recommended by the equipment manufacturers.

4.1.1 Desired Signal Modulation Level Calibration

The modulation level of the desired signal was first adjusted. For this calibration procedure, the RF switch unit was set in the "CAL" position. The desired channel FM exciter was set for the proper frequency and power level and the desired channel attenuators were adjusted to provide sufficient amplitude for a modulation reading on the Belar, Model FMSA-1, modulation monitor/analyzer. The FM stereo generator was set for 75 microsecond pre-emphasis and the limiter was inhibited.

The amplitude of the 1000 Hz audio tone was then adjusted for a 100 % reading on the stereo generator display and the voltage level of the composite output signal was verified. The FM exciter calibration procedure was then performed. The FM exciter display was verified to read 100 % peak modulation.

The modulation injection of the pilot tone was verified to read between 8% and 10% on the Belar modulation monitor. Minor adjustment to the amplitude of the audio tone was then performed to achieve 100 % peak modulation as displayed on the Belar modulation monitor.

During the actual test, the level and waveform of the composite signal was continuously monitored on the Tektronics, Model 2235A, oscilloscope and the modulation level was periodically checked on the Belar modulation monitor.

4.1.2 Undesired Signal Modulation Level Calibration

Initial calibration of the undesired signal path was performed using an audio tone in a similar manner to the procedures used for the desired signal path. This procedure verified proper calibration of the equipment and verified the pilot tone injection level. During the setup of the stereo generator, the limiter was activated and the manufacturer's procedures were followed to achieve 90% limiting. The audio tone was then replaced with the USASI noise signal and the amplitude of the noise signal was adjusted for 95% - 100% peak modulation[4] as indicated on the Belar modulation monitor. The undesired composite signal level and waveform were monitored continuously during the test on the oscilloscope display and the modulation level was periodically verified on the Belar modulation monitor.

4.1.3 Test System S/N Ratio Verification

The test system S/N ratio was verified prior to and during the conduct of the interference tests through use of the Belar modulation monitor/analyzer. For this test the RUT audio input to the HP Model 8903B audio analyzer was disconnected and the left channel output from the Belar modulation monitor/analyzer was connected to the audio analyzer. With the RF switch in the "CAL" position, the desired signal was activated and

[4] Because of the high noise peaks in the USASI noise signal, some ringing of the low pass filter occurs creating modulation peaks above the 90% limit programmed into the limiter.

the S/N ratio measured. The test system S/N ratio was verified to be greater than 63 dB. With the CCIR filter deactivated, the system distortion level was then verified to be less than 0.2%.

4.1.4 Desired Signal Amplitude Calibration

The test system was calibrated for three desired signal levels: -45 dBm, -55 dBm, and -65 dBm. For this calibration procedure, the desired signal was activated and the spectrum analyzer adjusted to display the desired signal spectrum. The RF switch was positioned in the "TEST" position. A second spectrum analyzer (Hewlett Packard, Model 8563E) was connected to the RUT signal input coaxial cable, within the shielded enclosure, in place of the RUT. The analyzer calibration was verified at the desired signal frequency using a calibrated signal source. The input impedance of the spectrum analyzer was 50 Ohms. The desired signal attenuators were then adjusted to achieve -45 dBm as displayed on the second spectrum analyzer. The signal amplitude of the primary spectrum analyzer (connected to the directional coupler) was recorded along with the attenuator settings. An additional 10 dB was then added to the desired signal attenuators and the signal power as displayed on the second spectrum analyzer was verified to be -55 dBm. The signal amplitude on the primary analyzer was recorded along with the attenuator settings. This procedure was repeated a third time for the -65 dBm power level.

The recorded power levels from the primary spectrum analyzer were used as the reference power levels for the interference tests. Since, for most receivers, the input impedance is unknown, a second step is required in order to insure proper power input to the receiver. This supplemental procedure, which involves the measurement of reflected power, is described in the Section 4.2.1 of this report.

4.2 Measurement Procedure

Each RUT was placed in the shielded enclosure and properly connected to the test equipment as shown in Figure 1. The receiver was turned on and allowed to warm up for at least 15 minutes. The RUT was tuned to the desired frequency (96.7 MHz) and the presence of the 1000 Hz tone was verified by listening to the RUT's built-in or external speakers. The volume control of each RUT was adjusted for a comfortable to moderately loud listening setting.

Those RUT's that required manual tuning (analog tuning knob), were verified to be tuned correctly by monitoring the local oscillator frequency emitted from the receiver using a passive E-field or H-field probe, in combination with a Hewlett Packard, Model 8563E, spectrum analyzer.

4.2.1 Adjustment of Desired Signal Power

The desired signal attenuators were adjusted to achieve the reference level corresponding to a forward power to the receiver of -45 dBm. The output from the directional coupler was then disconnected from the spectrum analyzer and the reflected power port of the return loss bridge was connected to the analyzer. The reflected power level was then measured and the input power level required to compensate for the measured power loss was calculated. The desired signal attenuators were then adjusted to achieve the required increase in the calculated forward power to the RUT.

4.2.2 D/U Measurement

With the desired signal attenuators adjusted to achieve a corrected power level of -45 dBm into the RUT, as described above, and the undesired signal inhibited, the RUT's

output signal voltage was measured using the Hewlett Packard, Model 8903B, audio analyzer and recorded on the data sheet. The 1000 Hz tone was then inhibited and the RUT's noise voltage level was measured using the audio analyzer and recorded. For both measurements the audio analyzer was set for a logarithmic display of the voltage in units of dBV. Also for both measurements, the CCIR filter, 30 kHz low pass filter, and quasi-peak detection mode were activated. Because the CCIR filter response has essentially no attenuation (or gain) at 1000 Hz (see Figure 3), the filter was not deactivated for the measurement of signal voltage. This simplified the test procedure and reduced the potential for error associated with activating and deactivating the filter for each measurement.

The RUT initial S/N ratio ($S/N_{initial}$) was then calculated by subtracting the logarithmic noise voltage ($N_{initial}$) from the logarithmic signal voltage ($S_{initial}$) as follows:

$$S/N_{initial}\ (dB) = S_{initial}\ (dBV) - N_{initial}\ (dBV) \qquad \text{Eq. 4.1}$$

The S/N ratio which corresponds to a degradation in the audio signal to the point of interference ($S/N_{degraded}$) was then calculated. For those receivers which exhibited initial S/N ratios less than 55 dB (Case 1), $S/N_{degraded}$ is defined to be 5 dB less than $S/N_{initial}$ as shown in the following equation:

$$\text{Case 1: } S/N_{degraded}\ (dB) = S/N_{initial}\ (dB) - 5\ (dB) \qquad \text{Eq. 4.2}$$

For receivers which exhibited initial S/N ratios greater than 55 dB (Case 2), $S/N_{degraded}$ is defined as:

Case 2: $S/N_{degraded}$ (dB) = 50 (dB) Eq. 4.3

Because the signal voltage is significantly greater than the noise voltage, the signal level does not change with increasing noise voltage which results from the interfering signal. Therefore, $S/N_{degraded}$ can be defined in terms of the noise voltage only. The reference noise voltage ($N_{ref.}$) corresponding to $S/N_{degraded}$ is defined in the following equations:

Case 1: $N_{ref.}$ (dBV) = $N_{initial}$ (dBV) + 5 (dB) Eq. 4.4

Case 2: $N_{ref.}$ (dBV) = $N_{initial}$ (dBV) + ($S/N_{initial}$ (dB)- 50 (dB)) Eq. 4.5

With the reference noise voltage calculated, the undesired signal was activated on the lower 3rd adjacent channel. The Hewlett Packard, Model 8568B, spectrum analyzer was adjusted to display both the desired and undesired signals and the frequency relationship between the two signals was verified.

The desired signal 1000 Hz modulating tone was then disabled such that the audio analyzer displayed the RUT noise voltage only. While monitoring the RUT noise voltage on the audio analyzer, the undesired signal level was increased until the RUT noise voltage matched the reference noise level of Equation 4.4 (Case 1) or 4.5 (Case 2). The 1000 Hz tone was then reactivated and the signal voltage, as displayed on the audio analyzer, was verified to be the same as the initial measured signal voltage. At this point the RUT measured S/N ratio was equal to $S/N_{degraded}$.

The D/U measurement was accomplished by first setting the spectrum analyzer to the peak hold mode and, after waiting for a period of at least 10 seconds, measuring the difference in amplitudes between the desired and undesired signals.[5] The measured amplitude difference in dB is the D/U ratio required to cause interference. For this measurement the spectrum analyzer resolution and video bandwidths were set for 10 kHz.

This measurement procedure was then repeated for the remaining two desired power levels and the remaining six undesired frequencies. The total number of D/U measurements performed in this manner, for each receiver, was 21 (7 undesired frequencies times 3 desired power levels).

5.0 Test Results

This section of the report presents the results of the FM interference tests for a sample population of 28 modern FM receivers. The results are presented in a graphical format in Appendix B and a tabular summary of the results is presented in this section. Because the Commission does not propose to alter the co-channel and 1st adjacent channel protection ratios, the discussion contained in this section of the report focuses primarily on the test results for the 2nd and 3rd adjacent interfering channels.

5.1 Test Samples

A list of the receivers tested, including the manufacturer, model number and brief description is contained in Appendix A. Six of the receivers are monaural only, while the

[5] If either the desired or undesired signal level was within 10 dB of the spectrum analyzer noise floor, the amplitude of both signals was increased identically until the signal levels were greater than 10 dB above the noise floor prior to performing the D/U measurement. This procedure minimized the error resulting from the addition of the analyzer noise power to the desired and undesired signal power.

remainder are stereo receivers. The monaural receivers are identified by an asterisk in the summary tabulations contained in this section of the report.

The test samples can be categorized into five distinct receiver types. The categories of receivers tested and the number of samples in each category are shown in Table 1 below.

Receiver Category	Test Samples
Automobile	8
Clock	5
Component	5
Personal	5
Portable	5
Total	28

Table 1 - Number of Receivers Tested in Each Receiver Category

5.2 General Discussion of Test Results

The test results for each of the 28 receivers are presented graphically in Appendix B. These graphs represent the D/U ratio required to degrade the receiver audio S/N ratio by 5 dB (Case 1: $S/N_{initial} < 55$ dB), or to degrade the receiver S/N to an absolute value of 50 dB (Case 2: $S/N_{initial} \geq 55$ dB). The vertical axis of the graph displays the measured D/U ratio while the horizontal axis displays the channel relationship of the interfering signal. Each graph contains three curves representing the test results for the three different desired signal levels: -45 dBm, -55 dBm, and -65 dBm. The data points have been connected for ease of viewing and to show the trend of the data with increasing frequency separation.

In general, the graphical presentation of the test results demonstrates that the receivers are most sensitive to co-channel interference, as might be expected, and are progressively less sensitive as the spacing between the desired and undesired frequencies increases. This performance characteristic results in the inverted "U" or "V" shape demonstrated by each of the graphs. Although each receiver exhibits this general characteristic, there is a wide variation in performance among the receivers tested.

The substantial variation in co-channel performance is associated with the receiver's internal noise. Table 2 presents the measured S/N ratios of each of the receivers, with no interfering signal present, for each of the three desired signal levels. If a receiver's initial S/N ratio is considerably less than 55 dB, it requires a much greater interfering signal to overcome the internally generated noise before a degradation of 5 dB is observed. This variation in performance can be seen by comparing, for example, the co-channel performance of Receiver #1 (clock) with the performance of Receiver #25 (automobile). The susceptibility of the receiver to adjacent channel interference is more a function of the filtering employed in the intermediate frequency (IF) stages of the tuner. The greater the slope of the filter skirts, the better the rejection characteristics of the receiver to adjacent channel interference. A cursory review of the graphical plots shows a wide variation in the susceptibility of the receivers tested and considerable asymmetry between the upper and lower adjacent channel performance.

Many of the receivers exhibit the characteristic of increasing D/U ratio (less negative or more positive) with increasing desired signal strength, particularly on the 2nd and 3rd adjacent channels. An increasing D/U ratio means that a lower interfering signal level relative to the desired signal level is required to produce interference in the receiver.

Table 2 - Signal to Noise Ratio without Interference

Receiver Number	Receiver Category	Desired Signal Level -45 dBm	-55 dBm	-65 dBm
1	* Clock	36.7	36.1	36.6
2	* Clock	46.0	45.6	44.3
3	* Clock	47.9	47.7	46.5
4	* Clock	40.2	40.3	40.3
5	Personal	43.3	33.8	23.1
6	Personal	39.6	29.9	19.9
7	Personal	44.7	35.7	25.3
8	Personal	47.8	38.2	28.4
9	Personal	47.3	38.0	30.1
10	* Portable	51.9	44.6	17.4
11	Clock	42.0	42.0	41.5
12	* Portable	53.1	53.1	52.8
13	Portable	49.9	49.6	49.7
14	Portable	44.0	35.6	25.2
15	Portable	51.1	50.3	46.3
16	Component	59.0	58.6	56.8
17	Component	54.8	54.4	51.9
18	Component	53.3	53.1	52.4
19	Component	49.7	49.9	49.5
20	Component	54.5	54.5	54.3
21	Automobile	54.6	54.4	51.1
22	Automobile	46.6	46.5	44.3
23	Automobile	46.4	46.4	46.3
24	Automobile	61.5	61.1	58.7
25	Automobile	49.5	44.2	41.1
26	Automobile	49.6	49.6	49.1
27	Automobile	53.6	53.4	52.2
28	Automobile	59.6	59.1	56.1
Minimum		36.7	29.9	17.4
Maximum		61.5	61.1	58.7
Median		49.6	47.1	46.3

Note: Asterisk denotes a monaural receiver

This implies that for those receivers which exhibit this characteristic, the interference experienced by the receiver is more closely related to the absolute undesired signal level rather than the D/U ratio.

The test results for each receiver are presented in tabular form in Tables 3, 4, and 5 for desired signal levels of -45 dBm, -55 dBm, and -65 dBm, respectively. In the Tables, the upper and lower adjacent channel D/U ratios have been averaged to result in a single value of D/U ratio for each adjacent channel. The averages were performed by first taking the inverse logarithm of the upper and lower logarithmic D/U ratios, summing the resultants, dividing by two, and taking the logarithm of the resulting average.

At the bottom of each figure is presented the minimum, maximum and median receiver performance for each undesired channel.

5.3 Third Adjacent Channel Test Results

The test results for the 3rd adjacent channel show a wide range of performance across the 28 receivers tested. The difference in performance between the best and worst performing receiver for each of the three desired power levels is approximately 50 dB.

The current FCC mileage separations for 3rd adjacent channel stations are based on a D/U protection ratio of -40 dB (an undesired signal level 100 times greater than the desired signal level). In Tables 3 through 5, receivers having a D/U ratio less than -40 dB, for example -45 dB, will not experience 3rd adjacent channel interference at the current protection ratio, while those receivers exhibiting D/U ratios greater than -40 dB, for example -35 dB, will experience interference at the current protection ratio. For the -45 dBm desired signal level (Table 3), 22 of the 28 receivers tested will experience

Table 3 - D/U Ratio Required to Produce Interference

-45 dBm Desired Signal Level

Receiver Number	Receiver Category	3rd Adjacent	2nd Adjacent	1st Adjacent	Co-Channel
1	* Clock	-25.4	-17.9	1.6	13.7
2	* Clock	-35.8	-28.0	2.6	27.8
3	* Clock	-27.2	-13.4	5.6	31.2
4	* Clock	-9.7	-6.4	-0.5	14.2
5	Personal	-27.9	-23.6	19.2	32.3
6	Personal	-25.9	-16.2	19.6	26.8
7	Personal	-21.9	3.2	6.7	34.2
8	Personal	-26.3	-15.8	23.3	34.4
9	Personal	-23.8	-7.3	33.8	33.1
10	* Portable	-37.4	-19.7	3.5	31.5
11	Clock	-34.6	-15.8	18.0	26.4
12	* Portable	-17.2	-10.0	4.0	40.5
13	Portable	-11.4	-2.9	33.0	39.8
14	Portable	-27.2	-12.9	30.7	31.8
15	Portable	-11.9	-2.1	31.3	39.8
16	Component	-12.8	-6.9	-0.3	39.4
17	Component	-22.2	-24.8	7.3	44.6
18	Component	-21.1	-21.8	1.7	45.0
19	Component	-23.6	-19.6	-7.1	30.9
20	Component	-39.3	-37.9	-8.1	36.5
21	Automobile	-51.7	-15.0	1.3	41.9
22	Automobile	-30.8	-26.4	-7.5	37.8
23	Automobile	-51.7	-53.6	0.6	31.7
24	Automobile	-49.6	-45.9	-13.9	35.9
25	Automobile	-21.8	-14.0	18.7	41.5
26	Automobile	-55.4	-53.3	-10.3	34.6
27	Automobile	-56.6	-44.5	-6.1	41.1
28	Automobile	-46.3	-45.0	-5.1	40.0
Minimum		-56.6	-53.6	-13.9	13.7
Maximum		-9.7	3.2	33.8	45.0
Median		-26.8	-17.0	3.0	34.5

Note: Asterisk denotes a monaural receiver

Table 4 - D/U Ratio Required to Produce Interference

-55 dBm Desired Signal Level

Receiver Number	Receiver Category	3rd Adjacent	2nd Adjacent	1st Adjacent	Co-Channel
1	* Clock	-28.9	-17.6	1.9	12.6
2	* Clock	-36.2	-32.6	-2.6	27.9
3	* Clock	-29.5	-15.1	5.1	32.1
4	* Clock	-16.9	-12.4	-1.1	14.7
5	Personal	-27.3	-30.8	9.7	25.3
6	Personal	-32.2	-27.4	9.9	20.0
7	Personal	-32.9	-5.5	5.5	24.1
8	Personal	-36.5	-25.6	13.5	12.0
9	Personal	-33.8	-15.3	23.1	25.8
10	* Portable	-47.7	-21.7	3.5	31.0
11	Clock	-35.7	-16.7	16.4	27.4
12	* Portable	-28.0	-20.7	6.0	36.2
13	Portable	-21.0	-9.0	32.7	38.0
14	Portable	-31.7	-16.7	24.1	24.6
15	Portable	-14.3	-4.2	31.5	38.8
16	Component	-21.2	-15.5	-1.9	38.8
17	Component	-32.1	-31.8	7.1	40.7
18	Component	-30.8	-31.4	0.2	45.3
19	Component	-31.9	-26.6	-7.7	32.2
20	Component	-49.2	-45.8	-10.2	40.9
21	Automobile	-31.7	-17.2	-6.1	40.5
22	Automobile	-30.4	-27.7	-7.2	39.0
23	Automobile	-65.2	-64.7	-0.4	32.1
24	Automobile	-57.1	-61.0	-13.7	37.6
25	Automobile	-21.6	-15.5	20.7	41.6
26	Automobile	-65.3	-61.5	-9.8	35.3
27	Automobile	-60.2	-45.1	-7.3	40.4
28	Automobile	-43.9	-41.9	-6.1	40.3
Minimum		-65.3	-64.7	-13.7	12.0
Maximum		-14.3	-4.2	32.7	45.3
Median		-32.0	-23.7	2.7	33.8

Note: Asterisk denotes a monaural receiver

Table 5 - D/U Ratio Required to Produce Interference

-65 dBm Desired Signal Level

Receiver Number	Receiver Category	3rd Adjacent	2nd Adjacent	1st Adjacent	Co-Channel
1	* Clock	-28.0	-17.2	1.8	12.3
2	* Clock	-39.4	-35.1	-2.1	27.6
3	* Clock	-30.1	-16.0	4.8	31.1
4	* Clock	-21.4	-14.3	-0.3	15.1
5	Personal	-45.6	-35.4	0.9	14.7
6	Personal	-36.0	-32.3	0.0	9.0
7	Personal	-42.3	-16.4	5.4	17.0
8	Personal	-44.7	-33.2	3.7	14.9
9	Personal	-40.8	-24.9	11.2	15.4
10	* Portable	-39.0	-27.8	0.2	16.2
11	Clock	-36.4	-19.1	17.5	26.6
12	* Portable	-36.5	-30.2	7.0	38.1
13	Portable	-22.2	-11.2	30.5	38.0
14	Portable	-45.1	-22.8	16.5	14.0
15	Portable	-18.3	-7.9	27.6	36.5
16	Component	-30.0	-25.4	-4.9	45.1
17	Component	-42.0	-39.1	4.0	38.2
18	Component	-38.2	-41.4	-1.5	37.3
19	Component	-38.3	-35.1	-7.0	31.8
20	Component	-56.6	-53.4	-9.3	46.5
21	Automobile	-40.4	-30.8	-3.2	38.0
22	Automobile	-34.0	-30.1	-9.4	38.3
23	Automobile	-67.0	-71.5	0.2	31.9
24	Automobile	-45.3	-61.3	-12.5	37.9
25	Automobile	-31.1	-26.0	18.1	40.2
26	Automobile	-63.8	-61.9	-10.2	35.6
27	Automobile	-59.1	-44.8	-9.2	38.5
28	Automobile	-39.9	-39.1	-5.8	40.2
Minimum		-67.0	-71.5	-12.5	9.0
Maximum		-18.3	-7.9	30.5	46.5
Median		-39.7	-30.5	0.2	33.8

Note: Asterisk denotes a monaural receiver

interference at a D/U ratio equal to the present 3rd adjacent channel protection ratio. At the -65 dBm desired signal level (Table 5), the number of receivers which will experience interference at the same D/U ratio reduces to 15.

The median receiver performance at the three desired signal levels shows a significant trend of increasing D/U ratio with increasing desired signal level. For a desired signal level of -65 dBm (Table 5), which corresponds to a field strength of approximately 60 dBuV/m (1.5 meter receive antenna height), the D/U ratio required to produce interference in the median receiver is -39.7 dB. This value is essentially equal to the present 3rd adjacent channel protection ratio of -40 dB. As the desired signal strength is increased, however, to -55 dBm (corresponding to a field strength of approximately 70 dBuV/m for a receive antenna height of 1.5 meters), the D/U ratio required to produce interference in the median receiver increases to -32 dB. Similarly, at a desired signal level of -45 dBm the D/U ratio required to produce interference in the median receiver increases further to -26.8 dB.

Table 6 below presents the results for the median receiver in each receiver category.

Table 6 - Median Receiver Performance by Category
3rd Adjacent Channel Interference

	- 45 dBm	- 55 dBm	- 65 dBm
Automobile	-50.6	-50.5	-42.9
Clock	-27.2	-29.5	-30.1
Component	-22.2	-31.9	-38.3
Personal	-25.9	-32.9	-42.3
Portable	-17.2	-28.0	-36.5