EX PARTE

WILLKIE FARR & GALLAGHER

Washington, DC
New York
London
Paris

EX PARTE OR LATE FILED

RECEIVED

DOCKET FILE COPY ORIGINAL

APR 24 1998

FEDERAL COMMUNICATIONS COMMISSION
OFFICE OF THE SECRETARY

April 24, 1998

Ms. Magalie Roman Salas
Secretary
Federal Communications Commission
1919 M Street, N.W.
Room 222
Washington, D.C. 20554

Re: Ex Parte Filing
ET Docket No. 95-183, RM 8553
IB Docket No. 97-95, RM 8811
CS Docket 97-151

Dear Ms. Salas:

On April 23, 1998, representatives of WinStar Communications, Inc. met with Ari Fitzgerald, Legal Advisor to Chairman Kennard and Peter Tenhula, Legal Advisor to Commissioner Powell to discuss WinStar's positions on sharing with satellite services in the 38.6-40.0 GHz band. Representatives of WinStar included Joseph Sandri, Jr., Barry Ohlson, Phil Verveer, and the undersigned.

During the meeting, WinStar circulated and discussed the points contained in the attached handout. It also reiterated its comments from ET Docket 95-183 and IB Docket 97-95 that sharing between terrestrial fixed wireless operations and satellite providers is infeasible in the 38.6-40.0 GHz band. With Mr. Fitzgerald, WinStar additionally discussed its pleadings from CS Docket 97-151 concerning rooftop access.

Three Lafayette Centre
1155 21st Street, NW
Washington, DC 20036-3384
202 328 8000

Telex: RCA 229800
WU 89-2762
Fax: 202 887 8979

Pursuant to the Commission's rules, six copies of this document are being filed with your office. Should you or the Commission staff require further information concerning the attached documents, please feel free to contact Michael Finn at (202) 429-4786.

Sincerely,

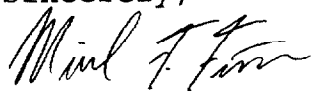

Michael F. Finn

Enclosure

cc wo/enclosure: Ari Fitzgerald
Peter Tenhula

WINSTAR®

Building A National Local Communications Company

CAPACITY	CONNECTIVITY	CONTENT
• Fixed Wireless Broadband circuits for CLEC business • Wholesale to other carriers	• Facilities-based CLEC; local, long distance, Internet and information services • Broadband data services, including: LAN/WAN connections; video; ISP Network Backbone; VAR/System Integration	• Customized information and programs delivered over the internet to business and education markets

WINSTAR®

Telecommunications Environment Rich in Opportunities for WinStar

Competitive Landscape Undergoing Fundamental Change:

- Monopolies under attack by regulators and competitors
- RBOCS poorly positioned to defend market share
- Large population of small and medium-sized businesses seeking alternative providers

Increasing Gap Between Computing Power and Delivery Systems:

- Critical shortage of high-speed broadband circuits
- On and off ramps needed for Information Superhighway

WINSTAR

The WinStar Advantages

- Unequaled expertise in using millimeter microwave technology to provide broadband telecommunications services
- Nationwide voice and data network serving 21 largest U.S. markets… 30 markets by year-end
- Unencumbered by legacy systems
- Managerial expertise in attacking monopolies

WINSTAR®

38 GHz Licenses are a Unique Strategic Asset

- WinStar has largest bandwidth / population coverage in U.S.
- Licenses in more than 125 cities with population over 100,000, including top 50 U.S. markets
- Unmatched speed-to-market
- Favorable cost structure
- WinStar uniquely positioned to enable local market access on a national basis

WINSTAR

WinStar is Largest Holder of Spectrum in U.S.

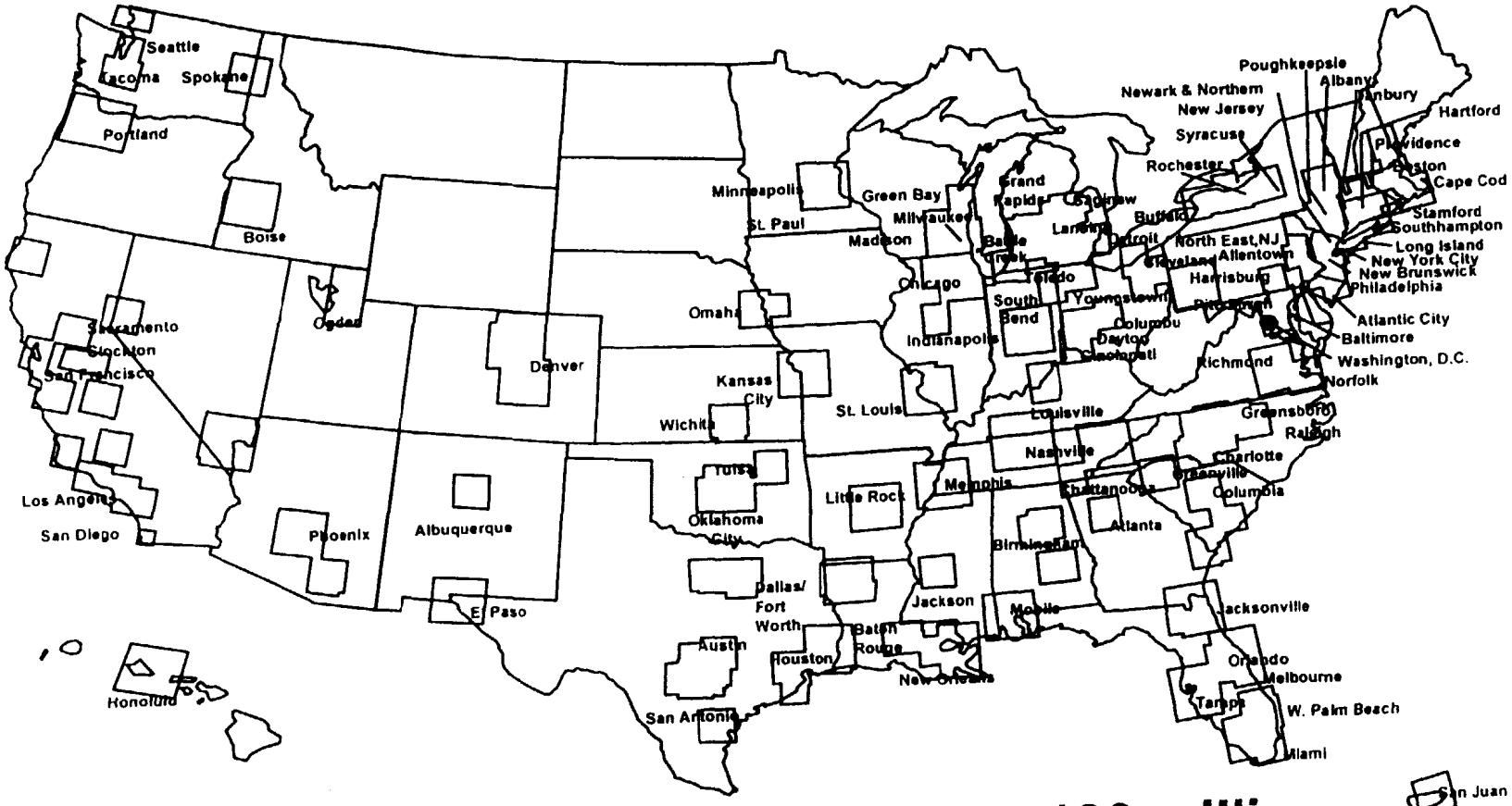

- Licenses cover population of almost 190 million
- One billion channel POPs

WINSTAR

Extensive Bandwidth Supporting Voice and Data Services to all Major Markets

Channel capacity by market

More than 1,000 MHz	10 channels (1,000 MHz)	9 channels (900 MHz)	8 channels (800 MHz)	7 channels (700 MHz)	6 channels (600 MHz)	5 channels (500 MHz)
Fresno	Ft Lauderdale	Atlanta	Buffalo	Chicago	Baltimore	Cleveland
Greensboro	Miami	Cincinnati	Dallas	Denver	Bergen-Passaic	Indianapolis
Modesto	Tampa	Fort Worth	Seattle	Minneapolis	Boston	Las Vegas
New Orleans		Houston		Phoenix	Detroit	Louisville
Norfolk		New York			Kansas City	Riverside
Oakland		Spokane			Los Angeles	Tacoma
Orlando		St. Louis			Memphis	Washington, DC
Provo					Milwaukee	
San Francisco					Newark	
San Jose					Orange County	
Salt Lake City					Philadelphia	
					Pittsburgh	
					San Juan, PR	
					Trenton	

- **Bandwidth averages more than 750 MHz in top 30 markets... approximately 740 MHz in top 50 markets**

WINSTAR

How Point-To-Point Wireless Fiber Service Works

Functional Equivalent of Fiber but Faster and Lower Cost to Install

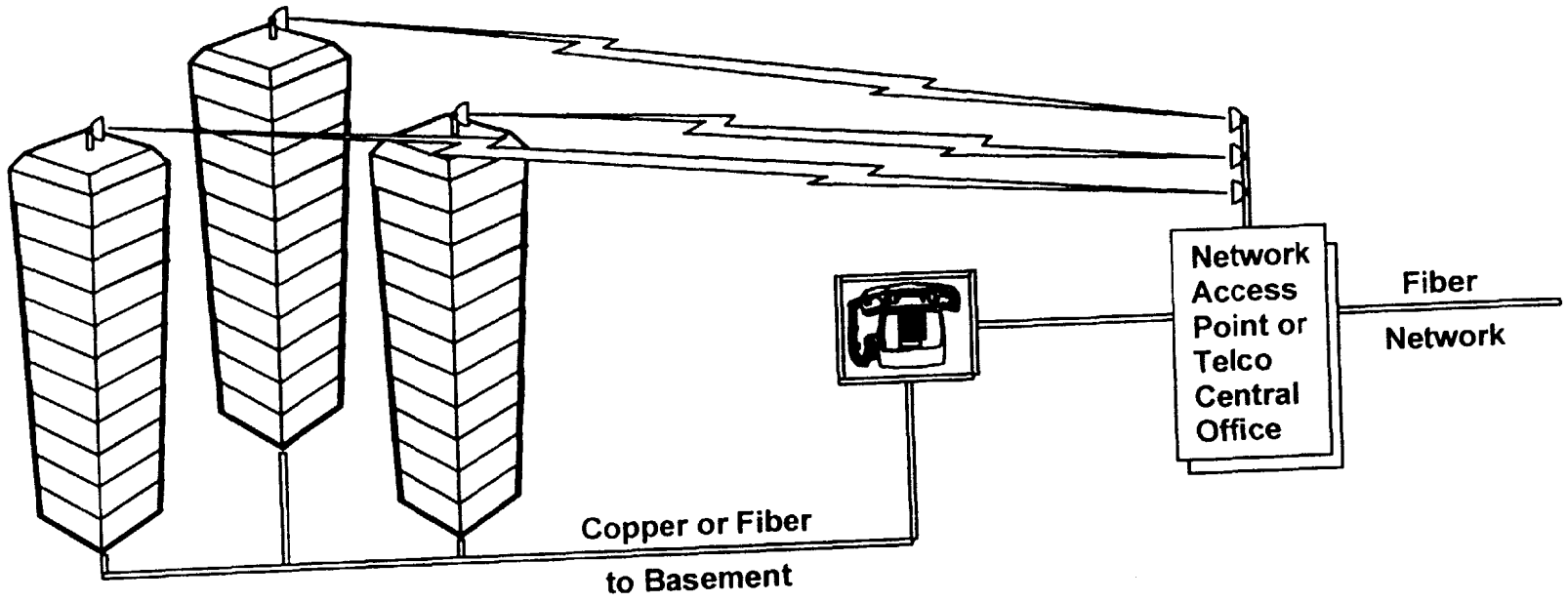

99.999% reliability ("five nines")

10^{-13} bit error rate

WINSTAR

125 Hubs To Be Completed by Year End

- Point-to-Point Hubs address up to 50 remote radios
- Point-to-Multipoint technology can be implemented with existing hubs

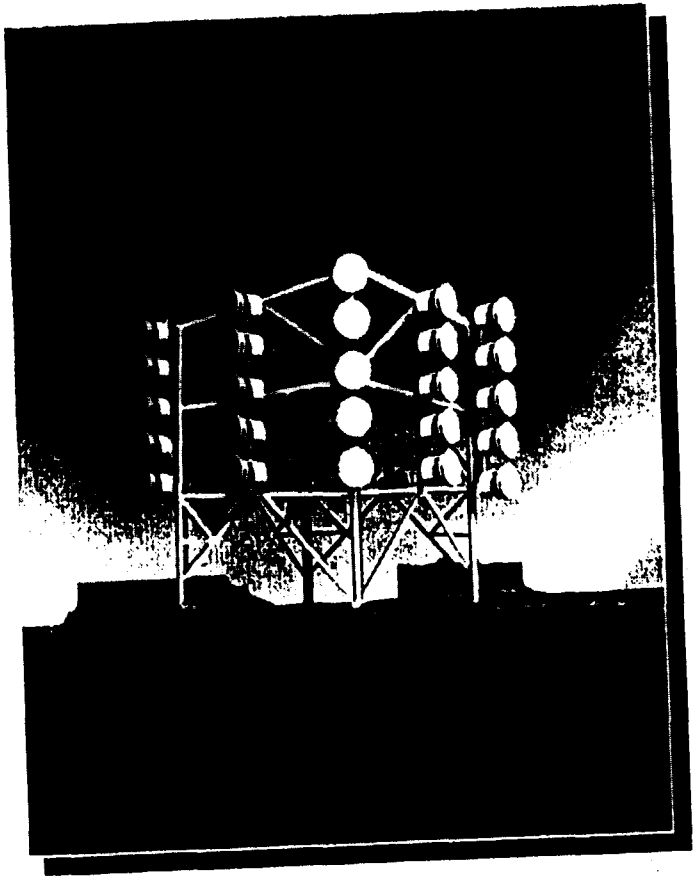

WINSTAR

WinStar's Cost Advantage

Cost to Build New Capacity: Fiber vs. Wireless Fiber Service

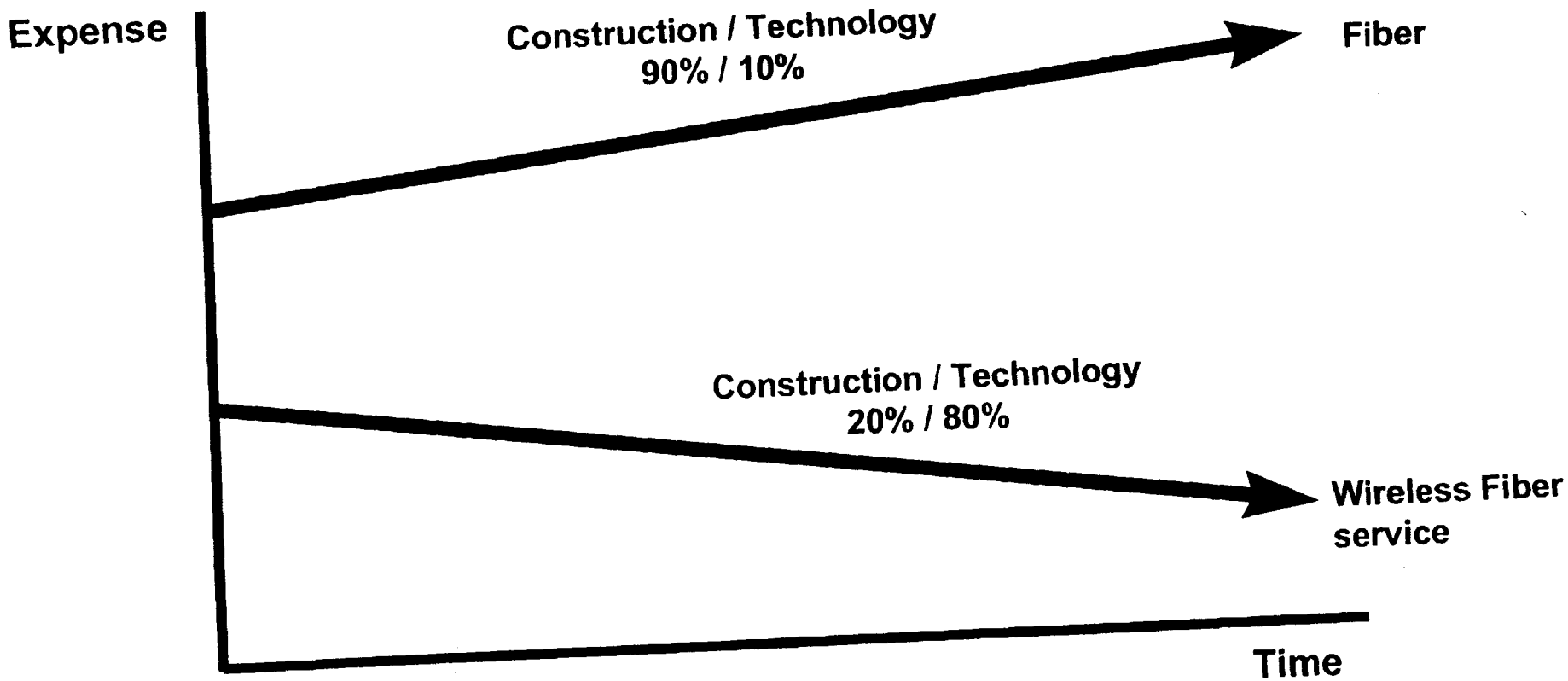

WINSTAR

How Multipoint Technology Works

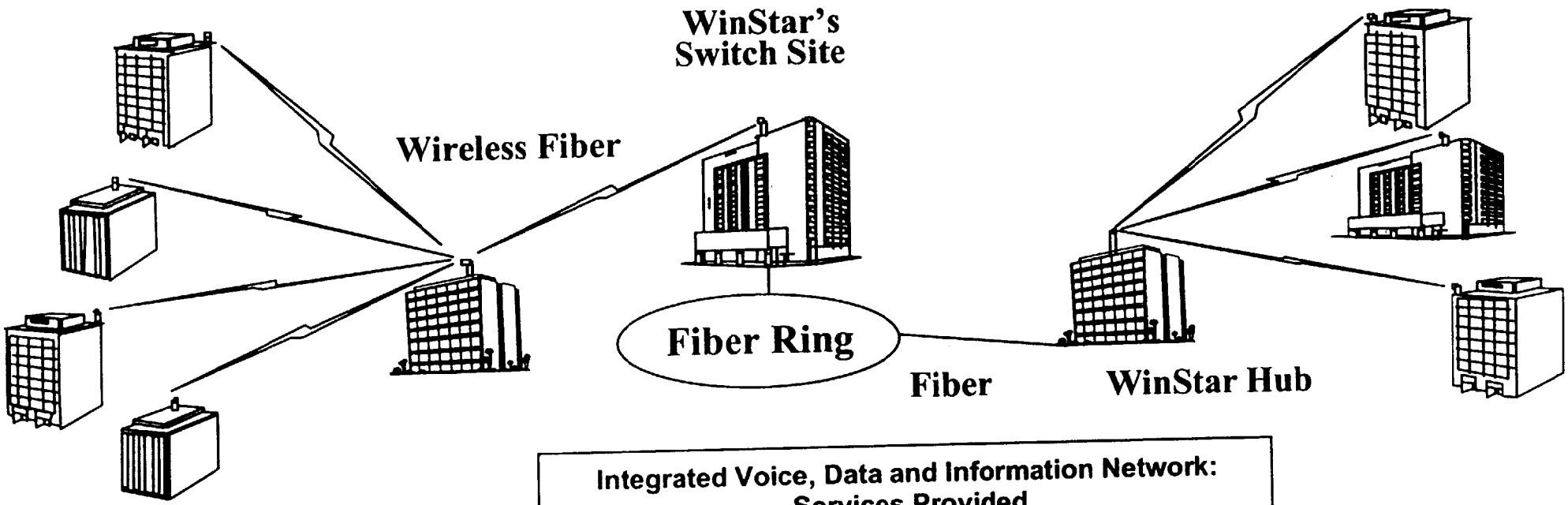

Integrated Voice, Data and Information Network:
Services Provided

- Voice Telephone
- Fax and modem
- High-speed Internet
- Fixed or Variable-Rate Data Communications
- Native LAN to LAN
- Video Conferencing
- Information Services

WINSTAR®

Benefits to Multipoint Network Architecture

- More efficient use of spectrum
- Lower network build-out and operating costs
- Bandwidth on demand
- Significantly expands addressable market
- Integrates voice/video/data network

WINSTAR

Favorable Economics of Wireless Fiber Circuits

Cost per installed T-1

Radios	1995	1996/97	1998/99	Beyond 1999
4x	*$3,500*			
DS-3		*$800*		
OC-3			*$400*	
Multiple point-to-point				*$200*

WINSTAR®

Building the WinStar Brand

- Media Advertising
- "Building-centric" marketing
  - owners and managers
  - tenants

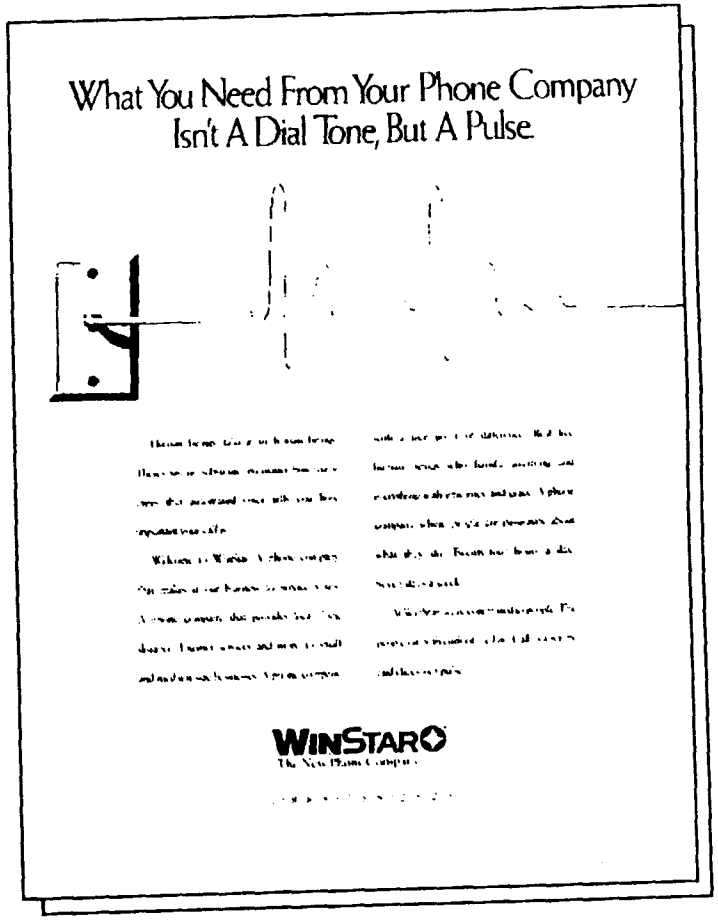

WINSTAR

New Media Supports CLEC Growth

- Differentiates WinStar's CLEC Services
- Drives Usage of Network
- Reduces Customer Churn

WINSTAR

Broadband Data Services

- Enormous Revenue Opportunity
  - $10 Billion Market
  - Completes bundled Service Offering
- Expanded services offering enables WinStar to target large businesses
- ATM, IP, frame relay data transport over national backbone
- LAN/WAN Professional Services
- Equipment Vendor/Channel Partnerships

WINSTAR

"Building-centric" Marketing

Initial Target Buildings

- >8,000 Buildings
  - >2.1 billion square feet
  - >9.7 million workers
  - >4 million voice lines

Multipoint Target Buildings

- Market expands to >30,000 buildings
  - $47 billion Market
- More than 75% of Target Buildings Have No Competitive Fiber

WINSTAR

New York City Business Model

1) Identified target buildings

2) Parallel activities:
   - installed switch
   - resold NYNEX
   - acquired roof rights
   - built hub sites

3) Customers put on WinStar switch

4) Resold NYNEX lines replaced by Wireless Fiber circuits ... customer put "on net"

WINSTAR

New York City Network

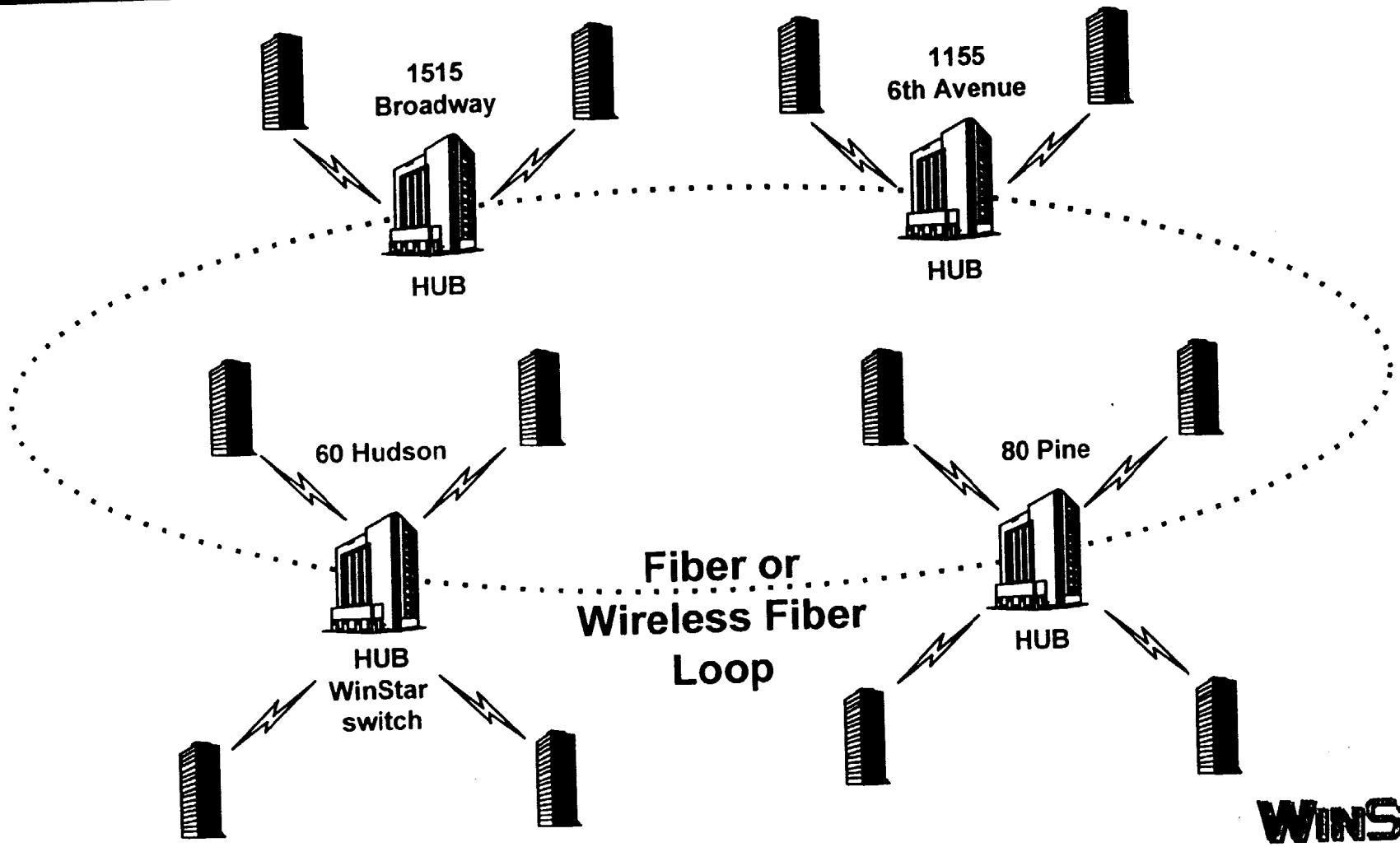

WINSTAR

WinStar Point to Multipoint Metropolitan Area Network

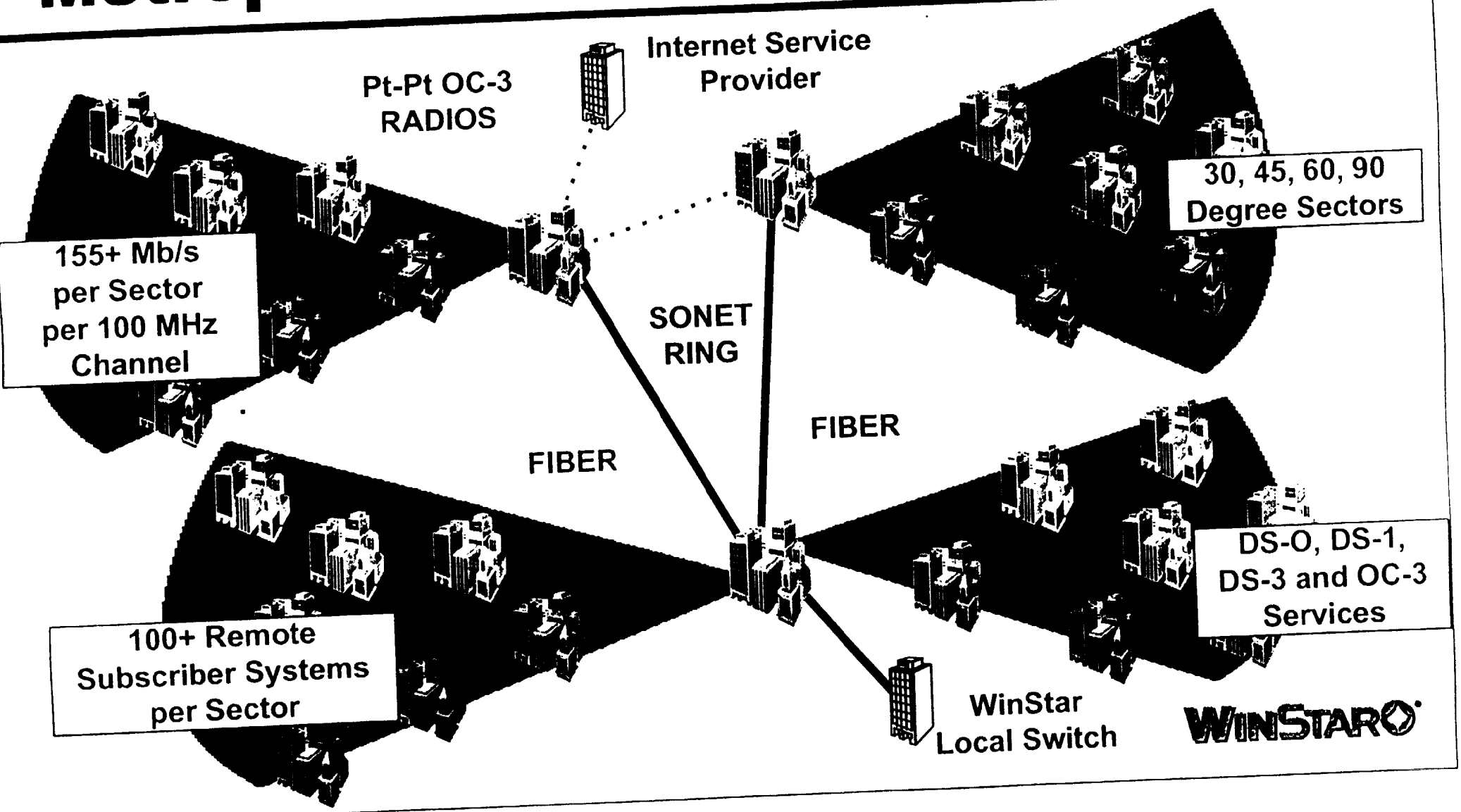

Expanding Network of Switched Cities

- Lucent Class 5 ESS-2000 Switches

Switched Services Available May 1998			1998 Year End
New York	Dallas	Tampa	Milwaukee
Chicago	Denver	Philadelphia	Stamford
Los Angeles	Minneapolis	Kansas City	Miami
Boston	Fort Worth	Baltimore	Detroit
San Diego	Atlanta	Columbus	St. Louis
Newark	Houston	Seattle	Cleveland
Washington, DC	San Francisco	Phoenix	Oakland
			Orange County, CA
			Oak Brook, IL

WinStar

Economics of 38 GHz On/Net Strategy

Highest Telephony Margins Possible

Nationwide Infrastructure

38 GHz Spectrum Covering 190 Million POPs

Gross Margin 60-70%	• Switched local services • Long distance • Internet serving • Other info services
Gross Margin 25-30%	• Local switched services resale • Long distance • Internet services
Gross Margin 15-20%	• Long distance • Internet services

Highest Gross Margins in CLEC Business

WINSTAR®

Important Measurements of Progress

An Expanding National Presence

	July 1996	Current	Projected
Major Markets with CLEC Sales Offices	*1*	*21*	*30+*
CLEC Field Sales Personnel	*35*	*400*	*600*
Major Markets Covered by Interconnect Agreements	*1*	*44*	*50+*
Major Markets with CLEC Authorizations	*11*	*48*	*50+*

WinStar