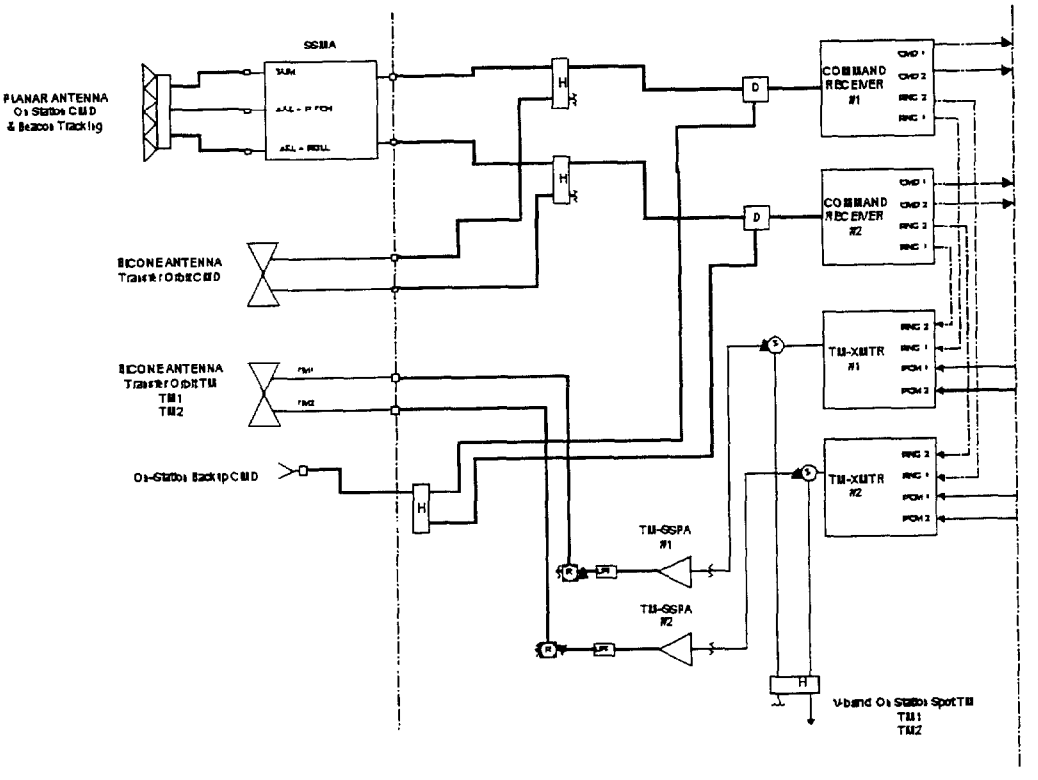


**Figure 4.6.7-1. TT&C Subsystem**

### 4.6.7.1. Telemetry

Telemetry data continuously sends unit status, satellite attitude, satellite performance, and other satellite information to satellite control centers for satellite management and control. The telemetry transmitter also serves as the downlink transmitter for ranging tones and command verification. The telemetry data mode is Pulse Code Modulation (PCM).

The telemetry system will have two encoders that modulate either of two transmitters via a cross-strap switch. For normal on-station operation, the telemetry connects via a filter to the transmit feeds of the communications antenna.

In transfer orbit, each telemetry transmitter will drive one of two downconverters followed by TWTAs selected to provide adequate Emitted Isotropic Radiated Power (EIRP) for telemetry coverage via the omni antenna. Commands by

ground control can select high level mode for additional transmission margin or emergency backup on-station.

#### 4.6.7.2. Command

The command system will control satellite operation through all phases of the mission by receiving and decoding commands to the satellite. Additionally, it will serve as the uplink receiver for ranging signals and provide closed loop tracking of a ground beacon for antenna pointing. It will perform the latter function without interfering with the command function. The command uplink will employ government-approved command encryption. The command signals route through a filter diplexer into a redundant pair of track command receivers. The composite signal of the receivers' total output will drive a pair of redundant decoders. The decoders will provide command outputs for all satellite functions. The command omni antenna receives in transfer orbit for command and ranging, while the communications antenna receives on-station for ground RF beacon tracking, command, and ranging.

#### 4.6.7.3. Telemetry and Command Performance

Table 4.6.7.3-1 summarizes the illustrative telemetry and command parameters. The satellite system requires a command receiver input power of approximately -135 dBW for command execution. A nominal ground station EIRP of 81.4 dBW meets the command threshold requirements through the communications antenna. Appendix A provides the telemetry and command link budgets for on-station operation.

**Table 4.6.7.3-1. Summary of Telemetry and Command Parameters (Illustrative)**

| Parameter | GSO Satellite | MEO Satellite |
|---|---|---|
| Command Frequency | 6.523 and 6.524 GHz | 6.426 and 6.427 GHz |
| Command Data Rate | 50 to 1000 bps | 50 to 1000 bps |
| Command Carrier Modulation | FSK | FSK |
| Command Carrier Deviation | 300 kHz | 300 kHz |
| Earth Station Command EIRP | 81.4 dBW | 81.4 dBW |
| Telemetry Frequency | 3.698 and 3.699 GHz | 3.601 and 3.602 GHz |
| Telemetry Data Rate | 1000 or 4000 bps | 1000 or 4000 bps |
| Telemetry Modulation | PSK | PSK |
| Telemetry Subcarrier Frequency | 32 kHz | 32 kHz |
| Satellite Telemetry EIRP | 8.0 dB, min | 8.0 dB, min |
| Ranging Accuracy On-Station | 30 Meters | 30 Meters |

The telemetry and command ground stations will use nine-meter and 11-meter antennas to control the satellites. Each GSO satellite will have a dedicated ground antenna for on-station commanding, ranging and telemetry reception. A number of additional ground antennas will be provided to control the MEO satellites and for redundancy and backup of the entire fleet. The 11-meter antennas will be equipped with 250 degree low noise amplifiers for a G/T of 36.8 dB/K. They will have 80 watt high power amplifiers that will provide an effective isotropic radiated power of 81.4 dBW.

#### 4.6.7.4. Tracking Beacons

Unmodulated CW transmission at C-band and V-band will be used as beacons to aid the ground user terminals in pointing their antennas, and to provide a stable reference for the satellite ACS.

Two beacons will be located at the edges of the C-band and V-band downlink communications bands. The satellite beacon parameters are shown in Table 4.6.7.4-1.

Table 4.6.7.4-1. Beacon Tracking Parameters

| Parameter | GSO Satellite | MEO Satellite |
|---|---|---|
| EIRP (dBW) | 12 (V-band); 9 (C-band) | 12 (V-band); 9 (C-band) |
| Downlink Frequency (GHz) | | |
| C-Band | 3.6995 | 3.6005 |
| V-band | 37.5015 | 37.5005 |
| Uplink Frequency (GHz) | | |
| C-Band | 6.5245 | 6.4255 |
| V-band | 45.5015 | 45.5005 |

## 4.7. Satellite Constellation

The space segment constellation consists of four technically identical GSO satellites and 20 technically identical MEO satellites. The orbital design optimizes the occurrence of three-satellite link diversity within the northern and southern latitude boundaries of 15° to 45°, the area of greatest population globally. More traffic will take place within these latitudes than at the equator, facilitating sharing with GSO satellites operating in the same bands.

### 4.7.1. GSO Constellation

There will be two GSO satellites at both the 99°W and 101°W orbital positions to provide coverage over the contiguous U.S. The selection of GSO orbit locations for the StarLynx™ system was based on the following considerations: (1) the orbit positions must be capable of accommodating V-band operations for U.S. coverage; (2) ground terminal elevation angles to StarLynx™ must be 30° or greater; and (3) the presence or absence of other satellite systems.

### 4.7.2. MEO Constellation

The MEO satellites orbit at 10,352 km, in five circular planes of four satellites each inclined at 55 degrees with zero phase offsets. The 10,352 km orbital altitude corresponds to a six hour orbit. It also places the satellites between the peak

radiation points of the Van Allen radiation belts. The MEO satellite orbital design allows complete coverage up to 80° latitude. It also provides a minimum elevation angle of 30° to minimize shadowing fades. This satellite design achieves the maximum overall coverage, elevation angle, and diversity results with 20 satellites.

The MEO constellation coverage is uniform with respect to longitude and symmetric about the equator. Figure 4.7.2-1 shows the number of diversity links of the MEO constellation as a function of latitude. A continuous single MEO satellite link occurs for all latitudes up to 80°. Double satellite links are present for latitudes between 26° and 54° for 90% of the time. Triple links are present for latitudes between 15° and 55° for 40% of the time.

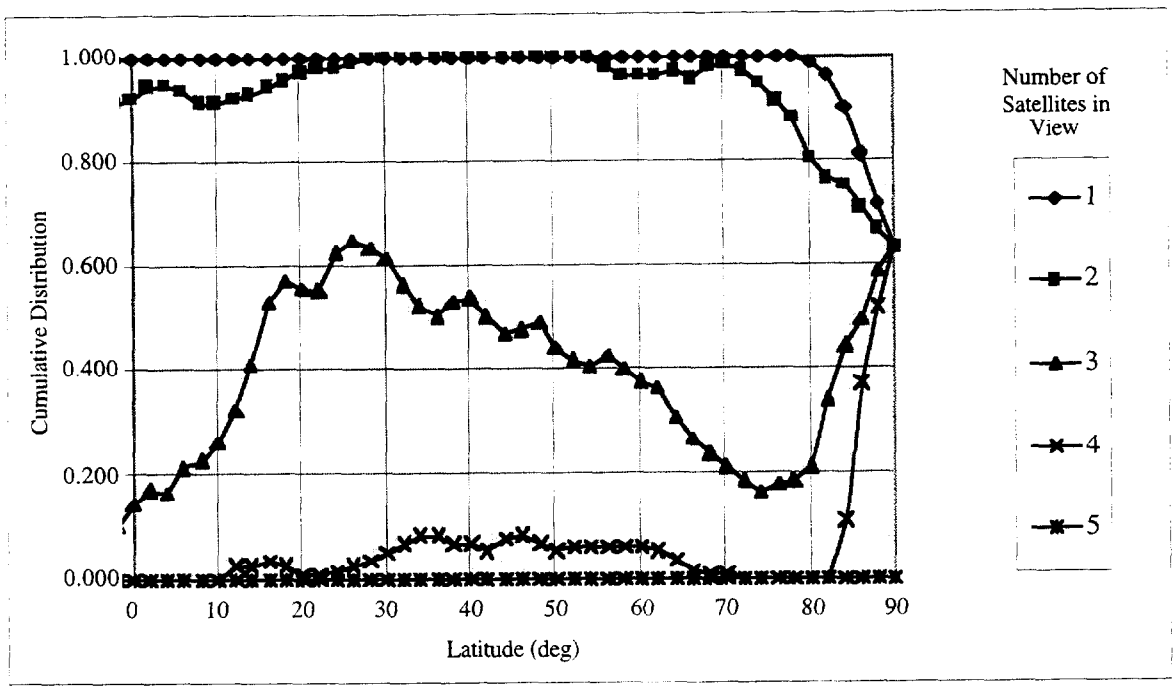


**Figure 4.7.2-1. Diversity Statistics for MEO Constellation**

Figure 4.7.2-2 plots the visible elevation angles of the MEO constellation. As indicated, elevation angles exceed 30° for all latitudes up to 80°. Elevation angles exceed 40° for all latitudes between 40° and 68°. Elevation angles exceed 40° during

80% of the day for latitudes up to 77°. Between 4° and 77° latitude, elevation angles exceed 40° for 90% of the time. Up to 72° latitude, elevation angles exceed 50° for at least 60% of the time.

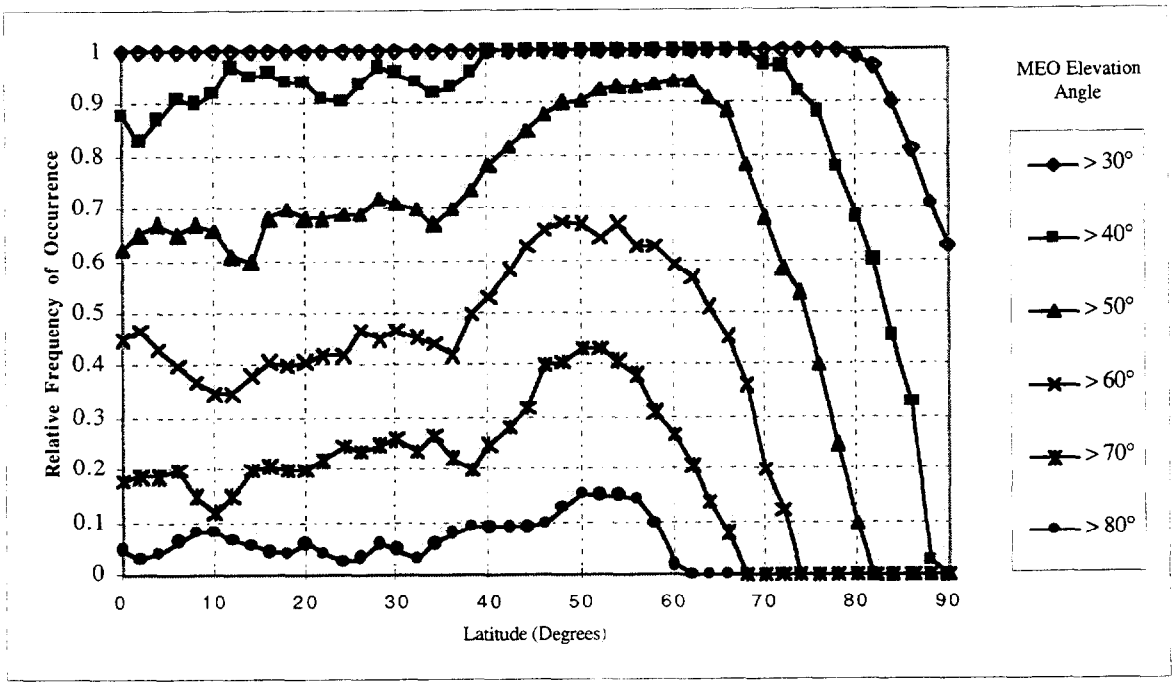


**Figure 4.7.2-2. Elevation Angle Statistics for MEO Constellation**

During the infrequent times when only one MEO satellite is in view to a user, that satellite will usually have a very high elevation angle. For example if only one satellite is in view in latitudes up to 76°, the elevation angle always exceeds 40°.

### 4.8. Satellite Operational Life

The satellite design meets all specified operational requirements for 15 and 12 year periods in orbit for GSO and MEO satellites respectively. Small degradations in performance may occur after this operational lifetime in orbit. A conservative design allows for environmental effects on the solar array, the TWTA and the battery charge and discharge equipment. The propellant remaining after the transfer

orbit allows for station keeping of 15 and 12 years for GSO and MEO satellites respectively. The propellant design meets requirements for on-station positioning and allows for the operations of inclination maintenance, orbital slot changes, and end-of-life de-orbit.

All critical electronics and components employ redundant units. The TT&C design implements a full two-for-one redundancy. The satellite electrical design follows well-established criteria in part selection. Designs are based on existing units that have been proven successful on missions after years in orbit.

## 4.9. GROUND SEGMENT

### 4.9.1. Control Centers

Two fully redundant centers will control and manage the StarLynx™ satellite system: a Satellite Control Center (SCC) and a Network Operations Control (NOC). The SCC manages all satellites and their orbits. The NOC operates in conjunction with the SCC to manage user access to the system as well as satellite handovers.

The SCC is primarily responsible for the real-time functions, such as connection management and access control. The NOC is primarily responsible for other functions, such as resource management, fault management, accounting, and billing.

### 4.9.2. User Equipment

There will be mobile user terminals that provide a maximum data rate of 8.192 Mbps, and portable user terminals that provide a maximum data rate of 2.048 Mbps. The tables shown below summarize the terminal characteristics.

**Table 4.9.2-1. Mobile Terminal Characteristics**

| | |
|---|---|
| RF Transmit Frequencies | 1.1 contiguous GHz between 45.5-46.7 GHz |
| RF Receive Frequencies | 37.5-38.6 GHz |
| Antenna Aperture (Flatplate) | 0.6 meter |
| Array Transmit Power | 10 W @ 1 dB backoff |
| Array Scan | +/- 55 ° (from zenith) |
| EIRP | 48.5 dBW at EOC and max scan |
| Receiver Noise Figure | 2 dB |
| Maximum Data Rate | 8.192 Mbps |

**Table 4.9.2-2. Portable Terminal Characteristics**

| | |
|---|---|
| RF Transmit Frequencies | 1.1 contiguous GHz between 45.5-46.7 GHz |
| RF Receive Frequencies | 37.5-38.6 GHz |
| Antenna Aperture (Flatplate) | 0.3 meter |
| Array Transmit Power | 10 W @ 1 dB backoff |
| Array Scan | +/- 55 ° (from zenith) |
| EIRP | 41.7 dBW at EOC and max scan |
| Receiver Noise Figure | 2 dB |
| Maximum Data Rate | 2.048 Mbps |

### 4.9.3. System Access Nodes (SANs)

The SANs will provide users a transparent connection with a wide variety of terrestrial networks via 60 cm or larger antennas at fixed locations. This will permit connection to networks using existing standards such as TCP/IP, ATM, Frame Relay, ISDN, and X.25 and the flexibility to utilize to future standards.

## 4.10. Link Availability

Table 4.10-1 lists the link availabilities for some cities in different part of the world. The system availabilities shown are conservative minimums due to these additional considerations:

- Diversity between adjacent MEO or GSO satellites.
- Many applications that would be supported by StarLynx™ are clear-weather activities -- remote filming, field work, etc.

**Table 4.10-1. Link Availability for Various World Locations**

| | Uplink | | Downlink | |
|---|---|---|---|---|
| | Portable Availability % | Mobile Availability % | Portable Availability % | Mobile Availability % |
| Beijing | 98.9 | 99.2 | 97.5 | 98.0 |
| Buenos Aires | 98.2 | 98.5 | 95.4 | 96.4 |
| Cairo | 99.4 | 99.5 | 98.7 | 98.5 |
| Chicago | 98.4 | 98.7 | 96.3 | 97.0 |
| Denver | 99.7 | 99.7 | 99.2 | 99.4 |
| Los Angeles | 99.4 | 99.5 | 98.7 | 98.9 |
| Moscow | 99.7 | 99.8 | 99.3 | 99.5 |
| Nairobi | 99.0 | 99.2 | 97.8 | 98.0 |
| New York | 98.4 | 98.7 | 96.2 | 96.7 |
| Rome | 98.3 | 98.8 | 96.0 | 96.8 |
| Tokyo | 98.2 | 98.5 | 95.4 | 96.4 |

### 4.11. Launch Segment

The StarLynx™ bus is compatible with a variety of commercially available launch vehicles. This allows a variety of launch provider options that meet program requirements.

THIS PAGE INTENTIONALLY LEFT BLANK

# 5. INTERFERENCE ANALYSIS

## 5.1. STARLYNX™ SYSTEM BAND PLAN

StarLynx™ will operate at geostationary orbit and medium Earth orbit in both the Mobile-Satellite Service and Fixed-Satellite Service bands. The space-to-Earth links will operate at 37.5-38.6 GHz, which is allocated internationally for FSS downlinks. The Earth-to-space links will operate in 1.1 GHz of contiguous spectrum within 45.5-46.7 GHz,[2] which is allocated internationally for MSS uplinks. Section 10 details how the StarLynx™ services are consistent with these existing allocations. In addition to the service links, StarLynx™ will use optical ISLs in the range of 1.55 micron wavelength.

The command links will operate in 1.5 MHz near the edges of the C-Band FSS Earth-to-space frequencies. The telemetry links will operate in 1.5 MHz near the edges of the C-Band FSS space-to-Earth frequencies. The receive beacons will operate in 100 kHz near the edges of the C-band FSS and 45.5-46.7 GHz Earth-to-

---

[2] In IB Docket 97-95, the Commission is currently considering various options with respect to the 36-51.4 GHz bands. The frequency bands requested for StarLynx™ were chosen to reflect both the system design optimization and the current HCI position regarding the NPRM. HCI respectfully intends to conform this application to reflect the outcome of that proceeding and/or any changes in the international Radio Regulations. The Commission's Public Notice establishing a cut-off for additional applications in the 36- 51.4 GHz frequency band, DA 97-1551 (July 22, 1997), stated that: "Applicants filing by the cut-off will be afforded an opportunity to amend their applications, if necessary, to conform with any requirements and policies that may be adopted subsequently for space stations in these bands."

space frequencies. The transmit beacons will operate in 100 kHz near the edges of the C-band FSS and 37.5-38.6 GHz space-to-Earth frequencies.[3]

### 5.2. Interference and Sharing Analysis

Interference can occur when the desired carrier to interference ratio (C/I) drops below a required protection threshold. To minimize the level of interference to and from other systems, StarLynx™'s hybrid GSO/MEO constellation uses spectrum sharing techniques of satellite diversity, high gain antennas (both at satellites and user terminals), CDMA, and beam-shaping.

This section addresses the potential for interference between StarLynx™ and other systems (GSO and NGSO) and presents a brief discussion of the sharing issues. Detailed analysis and sharing criteria are shown in Appendix B demonstrating that the StarLynx™ system can operate without causing or receiving harmful interference to and from other systems.

---

[3] It is not technically feasible to provide TT&C at V-band at this time because TT&C systems for those frequencies have not yet been developed. This development as well as operational experience would be required before it would be appropriate to rely on V-band for TT&C. Thus, the service rules eventually adopted by the Commission for satellite systems at V-band will need to facilitate the use of other frequency bands for TT&C operations. Currently pending before the Commission is a petition for rulemaking filed by nine satellite licensees that seeks to designate 10 MHz of spectrum within 3600-3700 and 6425-6525 MHz for TT&C operations for spacecraft that operate above the Ku-band. See In re Amendment of Parts 2 and 25 of the Commission's Rules to Designate Extended C-band Spectrum for TT&C Functions of GSO FSS Systems Operating in Bands Above Ku-band, Petition for Rulemaking of Comm., Inc., GE American Communications, Inc., Hughes Communications, Inc., et al. (filed August 7, 1997). HCI has chosen a portion of the C-band suggested in that petition as the proposed location of the TT&C operations of StarLynx™, and respectfully reserves the right to designate alternate TT&C spectrum depending on the outcome of Commission proceedings on this matter.

### 5.2.1. Intra-Service Interference and Sharing

#### 5.2.1.1. Mobile-Satellite Service and Fixed-Satellite Service

##### (1) StarLynx™ and Other GSO Systems

The spectrum sharing technique primarily used by GSO systems is orbital separation. Spacing between StarLynx™ GSO satellites and other GSO systems of 2° is adequate. This spacing will allow other GSO systems to operate using similar design parameters and interference protection criteria.

The primary spectrum sharing technique used by StarLynx™ MEO satellites to mitigate interference to and from other GSO systems is satellite diversity. As shown in Section 4.2.2, the MEO component of StarLynx™ has been designed to have dual satellite coverage more than 92% of the time for user terminals located at a latitude between 80°S and 80°N. This high percentage of dual satellite coverage provides a high degree of satellite diversity. As a result, the StarLynx™ MEO satellite design facilitates spectrum sharing with other GSO systems.

##### (2) StarLynx™ and Other NGSO Systems

The primary spectrum sharing technique that can be used to mitigate interference between StarLynx™ GSO satellites and other NGSO systems is also satellite diversity. The same discussions on dual satellite coverage as presented in Section 5.2.1.1 (1) between StarLynx™ MEO and GSO systems are applicable to this case.

Interference between StarLynx™ MEO satellites and another NGSO system can occur when active satellites from one system fly into lines of sight of active satellites of the other system. Because the operational nature of MSS user terminals excludes

the implementation of site diversity as a spectrum sharing technique, satellite diversity will be used as in the case between StarLynx™ MEO satellites and other GSO systems.

The frequency and duration of interference events between multiple NGSO systems depend on the specific parameters of respective systems. StarLynx™ MEO satellites have repeatable ground tracks which simplify the application of satellite diversity as a sharing technique in this case. Cooperation will be required for multiple NGSO systems to share the same spectrum.

StarLynx™ user terminals use phased array antennas with high directivity to minimize interference to and from other satellite systems. Harmful interference will be unavoidable with other systems (GSO or NGSO) if these systems use omni-directional user terminal antennas.

#### 5.2.1.2. Inter-Satellite Service

The extremely narrow beamwidths of StarLynx™ optical links ensure that satellite receivers outside the direct path of its laser beams will avoid harmful interference. The narrow beamwidths also prevent, as a practical matter, other satellites from blocking the lines-of-sight of the ISLs. For these reasons, and because the orbital positions and/or orbital parameters will differ between systems, the possibility of harmful interference occurring between ISLs is negligible. Therefore, common usage of the same optical wavelength (approximately 1.55 micron) on all StarLynx™ satellites is an efficient, practical method for achieving high bandwidth ISLs.

### 5.2.2. Inter-Service Interference and Sharing

#### 5.2.2.1. Terrestrial Services

Both StarLynx™ GSO and MEO links will meet the power flux density limits of Section 25.208 of the Commission's Rules and international Radio Regulation (RR) S21.16. As a result, there should not be any harmful interference from StarLynx™ satellites to terrestrial microwave facilities.

Interference into StarLynx™ satellites from terrestrial sites is unlikely because of the low elevation angles of microwave links and the high path loss and atmospheric attenuation between terrestrial sites and StarLynx™ satellites.

A StarLynx™ user terminal will not operate below an elevation angle of 30°, enabling it to meet the power limits of Section 25.204 of the Commission's Rules and RR S21.6, S21.8, S21.9, and S21.12. As a result, harmful interference will be minimized from StarLynx™ user terminals to terrestrial microwave facilities. Above 50° latitude, only StarLynx™ MEO satellites will provide service to ensure an operational elevation angle of at least 30°. However, for terrestrial systems which have very widely dispersed service links, interference into StarLynx™ user terminals from terrestrial units and vice versa is possible because of a lack of range protection.

#### 5.2.2.2. Space Research Service

StarLynx™ will share on a co-primary basis with the Space Research Service (SRS) at 37.5-38.6 GHz. StarLynx™'s narrow beamwidths together with geographical separation between StarLynx™ and SRS terminals will allow spectrum sharing in this band. The main source of interference will be from SRS Earth station

transmitters to StarLynx™ user terminal receivers. HCI will work with operators in this service on a case-by-case basis to resolve any coordination issues that may arise.

#### 5.2.2.3. Radionavigation and Radionavigation-Satellite Services

These services have co-primary international allocations with MSS at 45.5-46.7 GHz. In addition, the Radionavigation-Satellite Service has a co-primary U.S. allocation with MSS at 45.5-46.7 GHz. Unlike the terrestrial services discussed above, operations in the Radionavigation or Radionavigation-Satellite Services may occur at any elevation angle due to radar and direction-finding transmissions from or to aircraft and spacecraft. HCI will work with operators of these services to resolve any coordination issues concerning emissions in these bands, as necessary and applicable, where both MSS and either the Radionavigation or the Radionavigation-Satellite service have co-primary frequency allocations.

### 5.2.3. Government Use

The U.S. Government has expressed an interest in using the 37.5-38.0 GHz and 45.5-46.7 GHz bands for certain government systems.[4] However, as HCI noted in its comments in the proceeding in IB Docket 97-95, there is insufficient information currently available about those proposed uses to analyze their potential impact on commercial satellite systems such as StarLynx™. HCI believes that spectrum sharing in these bands between non-government and government systems should be based on the balanced needs of both types of users.

---

[4] *See* Notice of Proposed Rulemaking, IB Docket 97-95 (released March 24, 1997), ¶¶ 18-20 & 30.

### 5.3 SPURIOUS AND OUT-OF-BAND EMISSIONS

StarLynx™ will comply with the emission limitations specified in Section 25.202(f) of the Commission's rules.

THIS PAGE INTENTIONALLY LEFT BLANK

# 6. REGULATORY QUALIFICATIONS

## 6.1 LEGAL QUALIFICATIONS

HCI's legal qualifications are a matter of record before the Commission, and HCI will provide any additional information regarding its legal qualifications that the Commission may require.

## 6.2 COMPLIANCE WITH INTELSAT ARTICLE XIV

HCI recognizes that the StarLynx™ system may be subject to consultation requirements under Article XIV of the INTELSAT Agreement and will provide appropriate information to facilitate any such consultations.

## 6.3 TYPE OF OPERATIONS

HCI proposes to sell or lease StarLynx™ capacity to its customers on an individualized basis and will not hold itself out to serve the public indiscriminately. In accordance with the Commission's DISCO I Report and Order, 11 FCC Rcd. 2429, 2436 (1996), and Section 25.114(c)(14), HCI elects to offer capacity on the StarLynx™ system on a non-common carrier basis.

THIS PAGE INTENTIONALLY LEFT BLANK

# Milestone Schedule

# 7. MILESTONE SCHEDULE

HCI proposes to implement the global StarLynx™ system according to the following plan. The dates by which the following goals are scheduled to be achieved are as follows:

**Table 7-1. StarLynx ™ Major Milestones**

| Milestone | Milestone Completion (Months After Authority to Proceed) |
|---|---|
| Commence Construction of First Satellite | ATP + 12 |
| Construction of First Satellite Complete | ATP + 50 |
| First Satellite Launch | ATP + 51 |
| Initiation of Services | ATP + 53 |
| Last Satellite Constructed | ATP + 63 |
| Last Satellite in Service | ATP + 65 |

THIS PAGE INTENTIONALLY LEFT BLANK