The Expressway™ system is capable of providing a full range of services, from fractional T1 through OC-3 data rates and higher, in virtually any combination. It provides first and last mile connection, short haul (intrabeam) and long haul (interbeam) service capabilities. Each of the satellites in the system will provide the capacity equivalent of 42,000 simultaneous T1 circuits. The total global capacity of the 14 satellite Expressway™ system is 588,000 T1 circuits.

- 42,000 Equivalent T1 Circuit Capacity Per Satellite
- Total System Capacity: 588,000 T1 Circuits (14 Satellites)
- Circuit Switched Processor Payload
- Data Rate Compatibility: Sub-T1, T1, T3, OC-3, and Higher
- Forty Times Spectrum Reuse Per Satellite in V-band
- Ten Times Spectrum Reuse Per Satellite in Ku-band
- Capabilities
  - First and Last Mile Connection
  - Short and Long Haul Connection
  - North - South Hemisphere Thin Route Connection
  - Laser Intersatellite Links for Global Connection
- Selectable Coverage in V-band Provided by 204 Narrow (0.3°) Spot Beams Covering 3° X 6° Area
- Coverage in Ku-band Provided by Eight Elliptical 3° X 1° Area Coverage Beams
- North-South Hemisphere Coverage Provided by Ku-band 6° Spot Beam

Figure 1.1-2. Expressway System Key Features

The Expressway™ system will operate with 3.0 GHz of bandwidth in each of two polarizations in the V-band and 500 MHz of bandwidth in each of two polarizations in the Ku FSS band. The requested V-band spectrum will be reused 40 times over each service area. The requested Ku-band spectrum will be reused ten times over each service area. V-band coverage for a given area (3°x 6° in satellite coordinates, sufficient to cover an area the size of the 48 contiguous States) will be provided by an antenna system that offers the ability to independently select 20 receive dual-polarized spots from a total of 204 narrow (0.3°) receive spot

beam locations and 20 transmit dual-polarized spots from a total of 204 narrow (0.3°) transmit spot beam locations. Uplink and downlink beam selection can be changed any time on orbit to accommodate traffic requirements.

Thin route service will be provided by eight dual-polarized, elliptical area coverage (3° x 1°) beams and one large area (6°) beam operating in the Ku-band. Traffic from each of the Ku-band coverage areas will be coupled into the same Time Division Multiple Access (TDMA) switch on the satellite that routes traffic between the V-band beams.

To provide for hemispheric interconnectivity in the Americas, a Ku-band large area beam (6°) will be directed toward the southern hemisphere, allowing thin route coverage of South America. For Expressway™ satellites in other orbital positions worldwide, this beam will provide north-south interconnection, for example, between areas such as Europe and Africa.

Laser intersatellite links will interconnect Expressway™ traffic from one satellite to other satellites serving the same or other regions thereby providing global interconnectivity.

High data rate users will generally be served by V-band spot beams. The capacity of these individual user links will usually be in the T1 to OC-3 range. Rates below T1 will be accommodated at user terminals by submultiplexing to T1 (or higher) rates before transmission. Users in thin route areas will generally be served by Ku-band beams. Ku-band service will also provide higher link availability to users who require it. These users will have dual mode V-band and Ku-band terminals with antennas in the range of 2.5 meters.

1.2. POINTS OF CONTACT FOR APPLICANT

1.2.1. Name, Address, and Phone Number of Applicant

Hughes Communications, Inc.
1500 Hughes Way
Long Beach, CA 90810
Attn: Jerald F. Farrell, President
(310) 525-5010
cc: Scott Tollefsen, Vice President, General Counsel & Secretary
(310) 525-5150

1.2.2. Name, Address, and Phone Number of Contact

Gary M. Epstein
John P. Janka
Arthur S. Landerholm
Latham & Watkins
1001 Pennsylvania Avenue, N.W., Suite 1300
Washington, DC 20004
(202) 637-2200

1.3. Type of Authorization Requested

HCI requests authority to launch and operate 14 geostationary orbit (GSO) satellites at ten orbital positions to provide high capacity broadband FSS system coverage around the world. Table 1.3-1 lists the orbital positions for which HCI is requesting operating authority.[1] HCI will notify the Commission if it commences construction of this system before the grant of the system license.

[1] No construction authority is sought because the Commission has eliminated the construction permit requirement for U.S. licensed satellites. See 47 C.F.R. § 25.113(f).

Table 1.3-1. Requested Geostationary Satellite Positions

Satellite Coverage Area	Geostationary Satellite Orbit Positions	Number of Satellites Per Orbit Position
United States	99° W, 101°W, 103° W	2 Each
Latin America	63° W, 53° W	1 Each
Europe & Africa	8.5° E	2
Europe & Asia	48° E, 63.5° E	1 Each
Asia Pacific	113° E, 119° E	1 Each

If the V-band portion of this application is ready for Commission grant before the Ku-band portion is ready, HCI respectfully requests that the Commission grant the V-band portion. *See, e.g., Hughes Communications Galaxy, DA 97-971* (released May 9, 1997), at para. 16 (granting Ka band portion of application and deferring Ku-band portion).

2. PUBLIC INTEREST CONSIDERATIONS

Expressway™ will provide communications capabilities that will significantly enhance the National and Global Information Infrastructures. It will provide broadband service, including high speed Internet access and high rate data communications, to support a broad range of business applications for people throughout the world. By taking advantage of the cost insensitivity to distance of satellite based service, the innovative design of the system will permit this capability to be provided at much lower cost than currently is possible.

The terrestrial based infrastructure is being severely strained by the large increases in traffic on the public telephone network created by Internet use, higher rate modems and servers, and greater usage of data appliances such as facsimile machines. Upgrading the public telephone network is both time-consuming, and labor and capital intensive. Expressway™ provides an affordable, quick solution to the need to upgrade the public telephone network that is vital to the U.S. national interest.

Expressway™ will use an innovative approach to provide reliable link service in the heaviest traffic areas of the United States and the world while also providing thin route service to less populated areas. In doing so, the system addresses two important service issues related to the Administration's telecommunication infrastructure goals: relieving congestion among heavily used communications links in high-density areas, and bringing service to isolated rural areas that have not been able to participate fully in the new communications

world of the Internet and World Wide Web. In short, the system is a high speed network that allows access to all.

Developing countries will be able to use Expressway™ to improve their own national telecommunications infrastructures without the high cost and delay of laying cable and building terrestrial wireless facilities in remote areas. Since Expressway™ satellites will be interlinked between major global regions, high rate international communication capabilities also will be enhanced. This is especially important to U.S. and multinational corporations seeking to expand abroad. By improving communications capabilities throughout the world, Expressway™ will promote increased trade between the United States and other nations, allow greater access to communications resources, and contribute to a freer flow of information worldwide.

Construction of the Expressway™ system will in large part be accomplished by Hughes Electronics Corporation, an American telecommunications firm. The space segment will consist of high power satellites, which will be manufactured at the Hughes Space and Communications plant in El Segundo, California. Ground terminals will be manufactured by Hughes Network Systems of San Diego, California and Germantown, Maryland, and other U.S. suppliers. The use of U.S. manufacturing and construction facilities to build Expressway™ will result in the creation and maintenance of numerous highly skilled jobs for Americans.

3. MARKET FOR SERVICES

3.1. OVERVIEW

Expressway™ is a high capacity satellite system designed to meet high data rate requirements. It will provide capacity for data trunking, networking, and other interconnection needs. Expressway™ can be used in conjunction with other terrestrial and wireless services to complement and enhance existing services to data communications customers.

High speed data communication needs are no longer confined to the realms of science, government, and academia. Data communications networks are now recognized as required major arteries for the business community.

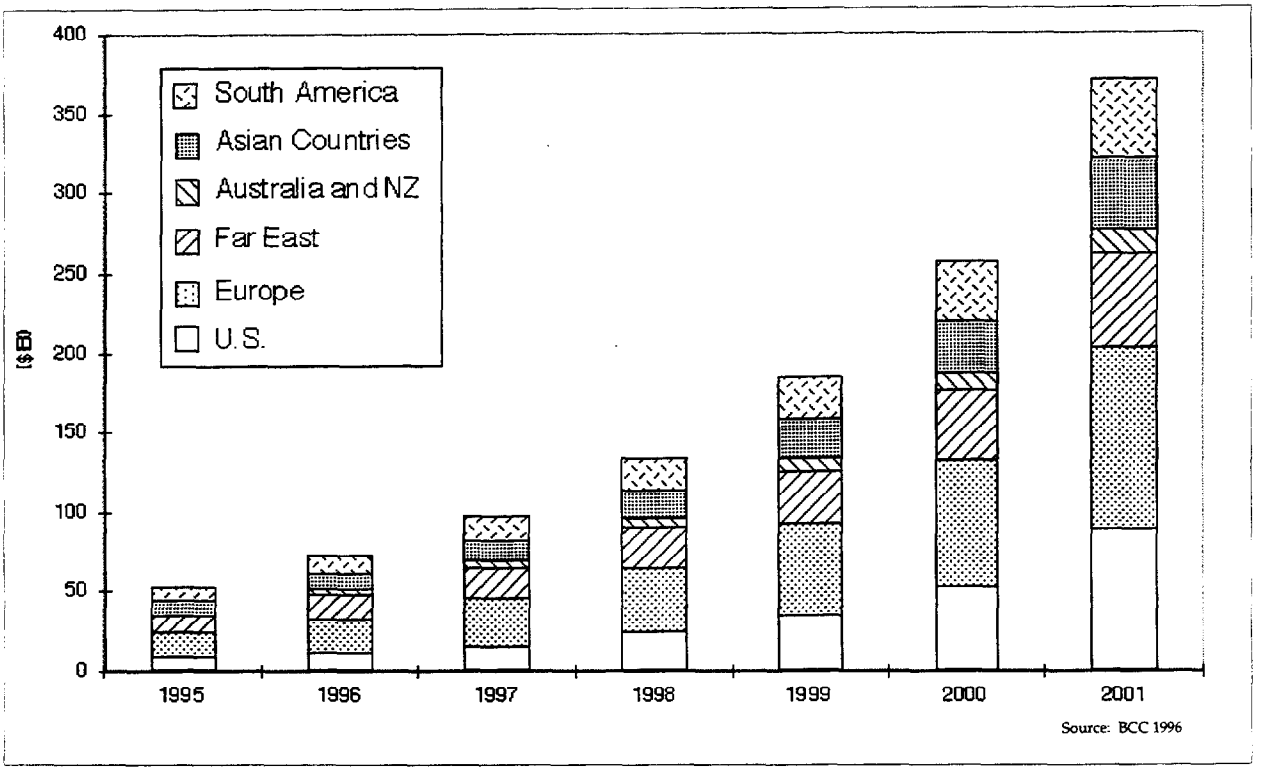

Figure 3.1-1. Consolidated World Markets for High Data Rate Communications

As Figure 3.1-1 illustrates, the proliferation of data networks and associated high speed applications and technologies makes it essential that users worldwide have available high data rate communications and network connectivity. Demand for access is at an all time high and will continue to grow both domestically and internationally at exponential rates. Access issues include congestion, build out, and remote connection. The short-term terrestrial solutions being implemented today are not keeping pace with current or proposed development of numerous high bandwidth systems. Communications providers are hindered by the high cost of both upgrading their systems and extending current capacity.

High speed remote access provides users with the flexibility to conduct business functions outside the office environment, a need that telecommunication providers have been unable to support very effectively. The corporate adoption of intranets and extranets creates a demand for secure high speed access, both for within organizations and from remote sites and facilities. Expressway™ meets each of these needs by offering high bandwidth connectivity to both small and remote sites.

3.2. Proposed Services

The proposed Expressway™ satellite system will both complement and offer cost effective alternatives to the terrestrial infrastructure. Through its offering of symmetric, high speed, flexible, secure interconnectivity, Expressway™ will provide a solution for access barriers to the communications infrastructure.

Network overload and service interruptions adversely affect both Internet providers and users. Expressway™ will benefit both providers and users by offering a much more cost-effective way to instantly expand the high speed data infrastructure. Internationally, many current cable systems were designed for voice traffic and are not optimized for data. Expressway™ will help fill that significant gap in the global infrastructure.

3.2.1. End-to-End Service

Expressway™ is capable of providing an end-to-end solution both regionally and globally for customers in need of high speed connectivity in markets where substantial terrestrial infrastructure expansion may not be currently cost justified.

The Expressway™ system offers a unique inherent characteristic of satellites--transportability. This feature provides users the option to locate to sites anywhere regardless of the absence of an adequate existing telecommunications infrastructure at desired new locations. This flexibility will greatly expand opportunities for telecommuting and providing temporary sites for mobility-intensive industries such as construction, oil drilling, and remote site film production.

3.3. MARKET DEMAND

3.3.1. Public Networks (Internet)

Increasingly, businesses are adapting Internet technology to build corporate intranets and extranets. These new forms of Local Area Networks (LANs) and Wide Area Networks (WANs) are fueling the demand for high-speed telecommunications service.

Carriers and providers have experienced a corresponding shift from voice dominated networks to circuits that are overloaded by data. In this environment, there is a clear demand for networks optimized for high speed data traffic. Public networks, while initially a catalyst for widespread data use, have not kept pace with increased traffic through commensurate infrastructure upgrades. Expressway™ will allow instant connectivity to ubiquitous infrastructure at very high speeds—an ideal answer to existing unmet demand.

3.3.1.1. T1 Service

In the current era, leased T1 lines are moving beyond their traditional role as corporate backbones and are increasingly used to access the Internet and the public switched network. A T1 line can be used as a dedicated link to the Internet or as a conduit into a corporate network that consolidates and carries a mix of communications traffic, especially the growing video and data traffic from remote sites. Studies indicate that the number of installed T1 lines in the U.S. will total two million by the end of 1998.[2] The Expressway™ system is targeted at addressing this growing demand.

3.3.1.2. Private Networks

Corporate LANs/WANs are generating an ever-increasing demand for greater bandwidth and enhanced network speed, particularly as personal computers are increasingly used to process not only text but graphics and video as well.

---

[2] "A T1 Resurgence--Intranets, remote access are driving unexpected growth," *Communications Week*, April 1997, p.1.

Video transport is another highly data-intensive service. Scientific applications require ultra-high bandwidth networks to visualize 3D models and other complex renderings. Magazines, brochures, and other publications prepared on desktop computers are being transmitted directly to digital-input printing facilities. Medical centers are transmitting images over WAN and LAN links, enabling specialized medical equipment and expertise to be shared.

While the eventual upgrade of current networks to high speed systems will take place over time, many approaches will be necessary to address expanding needs. The Expressway™ system will help all users, large and small, take advantage of the capabilities of a global high speed infrastructure.

The world has a growing need for high rate communications and connectivity. Currently, nations are paving new paths to the worldwide communications infrastructure. The U.S. and other nations are leading the way through initiatives such as the Telecommunications Act of 1996, the National Information Infrastructure (NII), the Global Information Infrastructure (GII), and, most recently, the World Trade Organization Basic Telecommunications Agreement of 1997. With the passage of these historic milestones, access will be the bridge to a successful and effective communications future.

The Telecommunications Act of 1996 was the first step toward facilitating vigorous competition in the domestic telecommunications marketplace. It sets out to provide cost and service benefits to consumers by increasing choice and providing higher quality service. Expressway™ will be one of those pro-competitive new choices for users.

Expressway™ addresses the five goals of the Administration with respect to the NII and the GII: (1) encourage private investment; (2) provide and protect competition; (3) provide open access to the network; (4) avoid creating a society of information "haves" and "have nots"; and (5) encourage flexible and responsive government action. Expressway™ will be a privately financed system that enhances competition, increases choices, and lowers prices for consumers. By offering low-cost advanced capabilities to underserved areas, Expressway™ will equalize the ability of all users to access the information network. In sum, the Expressway™ system will provide consumers with more choices and lower prices.

3.3.1.3. Pioneering

Much like the construction of our nation's earlier railroad and highway infrastructures, Expressway™ will stimulate trade of data and services between commerce centers and people in outlying regions where such activity is currently impossible. The Expressway™ system will be a pioneer blazing the trail for users and application developers on tomorrow's network frontiers. Further, the system offers a high speed network that will allow access to all. Not only will a dispersed work force of telecommuters have access to the network, but they will also be able to compete effectively in an increasingly information intensive environment.

3.3.1.4. Creating Opportunity in the Public Interest

The open access offered by Expressway™ will benefit a growing variety of information-dependent services, such as education and health care. As part of our national goal of interconnecting all classrooms to the NII, Expressway's™ technology will help alleviate the lack of access to advanced communications

capabilities in our public educational institutions. In furtherance of the NII Agenda for Action, students from remote school districts will have access to libraries of information from around the world. Expressway's™ wireless connection will greatly reduce the high cost of data transport and provide immediate access for remote and underserved areas.

Additionally, the Expressway™ system will be able to assist the government in natural disaster relief. Expressway™ connections can be quickly set up and maintained in the event of any disaster that disrupts terrestrial services.

3.3.2. Creating Industrial Opportunities for Domestic and World Economies

The construction and implementation of new network services will utilize the scientific talent and flex the same creativity and entrepreneurial muscle that created this country. New technology centers will arise and new jobs will be created, not only through the construction of the satellites, ground stations, and networks, but also as a result of the connectivity enabled by Expressway™.

3.4. Key Advantages Over Other Systems

Expressway™ offers significant advantages over other existing and proposed systems in terms of its high capacity, flexibility of access, extensive connectivity, and economy of service. By providing ready and economical access for first and last mile connectivity, Expressway™ will promote the growth of small to medium size business users that could not otherwise afford the high performance communications services that are necessary to support their businesses.

This page is intentionally blank.

4. SYSTEM DESCRIPTION

4.1. ORBIT CONSIDERATIONS

The selection of orbit positions for the Expressway™ constellation was based on the following considerations: (1) the orbit positions must be capable of accommodating both V-band and Ku-band operations; (2) the orbit positions must support service to and from metropolitan and business areas throughout the world; (3) ground terminal elevation angles to Expressway™ satellites must be 32 degrees or greater to minimize adverse propagation effects; (4) the number and location of orbit positions must be capable of accommodating present and future traffic growth projections throughout the world; and (5) the presence or absence of other proposed or deployed satellite systems.

Using the above criteria, ten orbit positions were selected for the Expressway™ system as depicted in Table 4.1-1. All satellites will be technically identical and interchangeable among service regions.

Table 4.1-1. Requested Geostationary Satellite Positions

Satellite Coverage Area	Geostationary Satellite Orbit Positions	Number of Satellites Per Orbit Position
United States	99° W, 101°W, 103° W	2 Each
Latin America	63° W, 53° W	1 Each
Europe & Africa	8.5° E	2
Europe & Asia	48° E, 63.5° E	1 Each
Asia Pacific	113° E, 119° E	1 Each

HCI acknowledges that certain portions of the Ku-band identified in Section 4.2.1 below are already in use at certain orbital positions that HCI has proposed for Expressway™. For example, AMSC is currently using a portion of the planned Ku-band at 101° W, GE Americom is operating standard Ku-band satellites at 101°

and 103° W, and PanAmSat is operating Galaxy IV(H) in the standard Ku-band at 99° W. HCI expressly does not seek authority to use any portion of the Ku-band at any orbital position where that portion is unavailable. The existing use of portions of the Ku-band at different orbital locations and differences in the allocations for these bands around the world are the reasons why HCI has specified a range of Ku-band frequencies currently allocated for the FSS of which it proposes to use 500 MHz at each orbital position (a range of 12.75-13.25 GHz and 13.75-14.5 GHz in the uplink band and 10.7-12.75 GHz in the downlink band). While each Expressway™ satellite will be capable of operating across this entire range (in order to simplify satellite construction and provide maximum in orbit redundancy), it actually will operate at its assigned orbital positions only in 500 MHz of the Ku-band that is available for licensing there.

4.2. Radio Frequency and Polarization Plan

4.2.1. Frequency and Polarization Plan

Figure 4.2.1-1 shows an overview of the frequency and polarization plan for the Expressway™ system. As shown in Figure 4.2.1-1a, V-band, high rate communications will take place in the 47.2-50.2 GHz (Earth-to-space) and 39.5-42.5 GHz (space-to-Earth) bands. The entire 3 GHz of bandwidth will be utilized in each of 20 dual-polarized antenna spot beams selected from a 3° X 6° coverage area, thus providing a frequency reuse factor of 40 per satellite. Antenna tracking beacons will be inserted at the lower edges of the V-band uplink and downlink bands.

Figure 4.2.1-1b shows the plan for Ku-band communications. The Ku-band will be used to provide thin route coverage over a 3° X 8° area. Five hundred MHz of spectrum in the 12.75-13.25 GHz and/or 13.75-14.5 GHz uplink band and the 10.7-12.75 GHz downlink band will be utilized, depending on spectrum availability at each orbital position. For purposes of illustrating a frequency plan, use of the planned Ku-band is shown in Figure 4.2.1-1. Eight dual-polarized elliptical spots will be used to cover a 3° X 8° area with 250 MHz of bandwidth being used in adjacent spots to minimize beam-to-beam interference. This bandwidth will also be used to provide wide area, thin route coverage and connectivity in the opposite (north-south) hemisphere. For this capability, a steerable, 6° circular area beam will be used. The 500 MHz of Ku-band spectrum will be reused a total of eight times in the 3° X 8° coverage area. Counting the additional, opposite hemisphere coverage, the Ku-band spectrum will be reused a total of ten times per satellite.

Figure 4.2.1-1c shows the plan for command, telemetry, ranging and tracking beacons. All of these functions will take place at Ku-band using approximately 2 MHz of bandwidth near the lower edges of the respective receive and transmit bands, as illustrated.

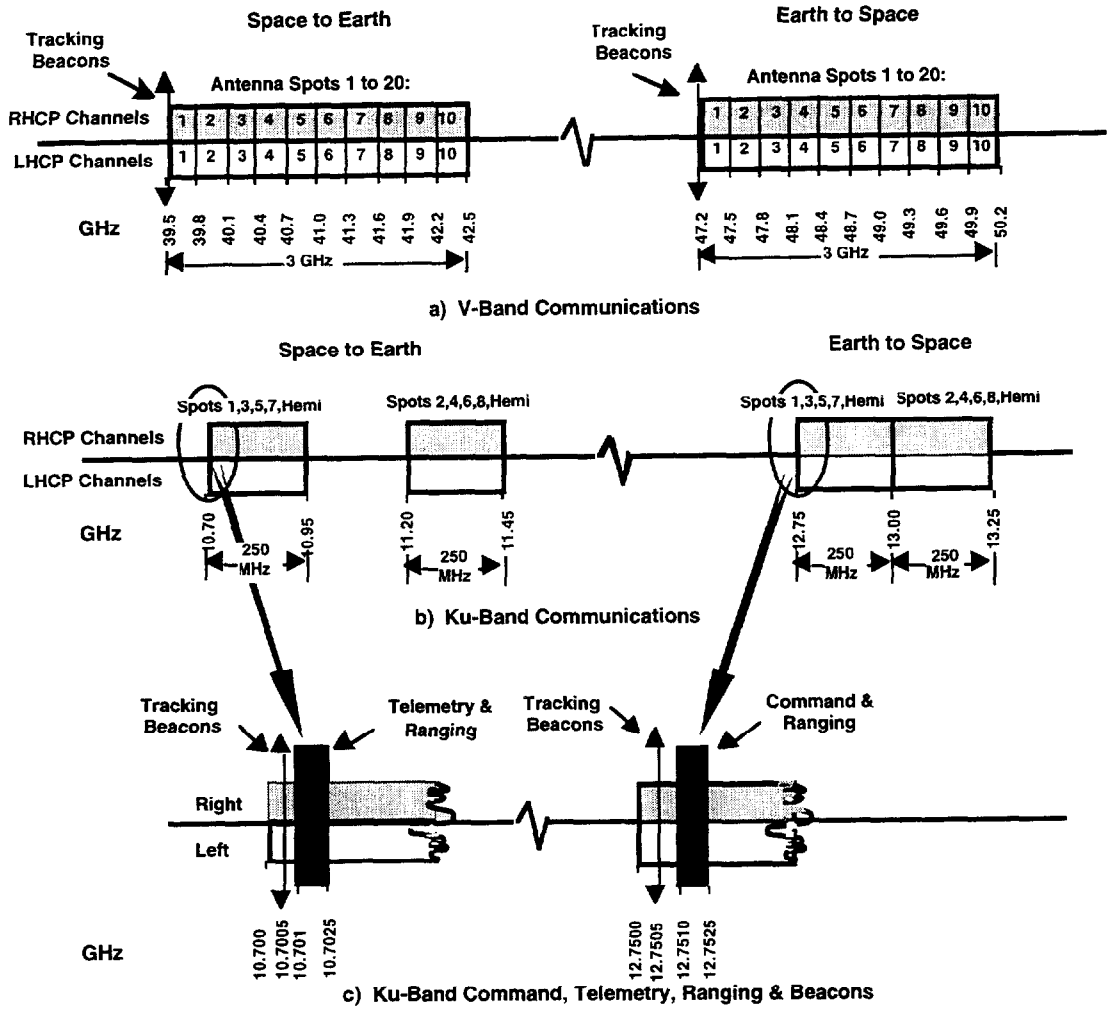

Figure 4.2.1-1. Illustrative Frequency & Polarization Plan

Figures 4.2.1-2 and 4.2.1-3 show the detailed frequency and polarization plans for V-band communications. As illustrated, the 3 GHz of spectrum will be channelized into ten 300 MHz wide frequency division multiplexed (FDM) channels, each of which are time division multiplexed (TDM) by 100 time channels or slots. Users will be assigned a unique time slot and FDM channel and will, in general, burst data at 155.52 Mbps. Data rates lower than T1 will be multiplexed to the T1 rate by equipment located at user ground terminals. All

uplink time slots and all downlink time slots are synchronized to a satellite clock that controls channel to channel switching and connectivity by means of a satellite TDMA switch. Because 20 dual-polarized spots[3] will be active at any given time and because each beam is capable of supporting 1000 users each at a T1 rate, the total capacity of the V-band system is 40,000 T1 circuits per satellite.

Ku-band communications will use an approach similar to that of V-band. Figures 4.2.1-4 and 4.2.1-5 show the detailed frequency and polarization plans for the Ku-band, using the planned Ku-band for illustrative purposes. Again, 100 time slots will be time division multiplexed onto a single uplink or downlink carrier to provide a total Ku-band capacity of 1600 T1 circuits, exclusive of that provided by the hemispheric area coverage capability. This hemispheric beam will provide an additional capacity of 400 T1 circuits.

[3] Thus, by employing dual polarization, Expressway effectively meets the full-frequency reuse requirements of Sections 25.210(c) and (e) of Commission's Rules. As is the case with the Ka band, the Commission, in modifying its existing service rules to facilitate licensing in the 50/40 GHz band, should allow use of dual circular polarization, instead of dual linear polarization. In order to facilitate use of the same type of polarization for both the Ku-band and V-band on Expressway™ and to the extent necessary, HCI requests a waiver of the vertical and horizontal polarization requirements of Section 25.210(c).

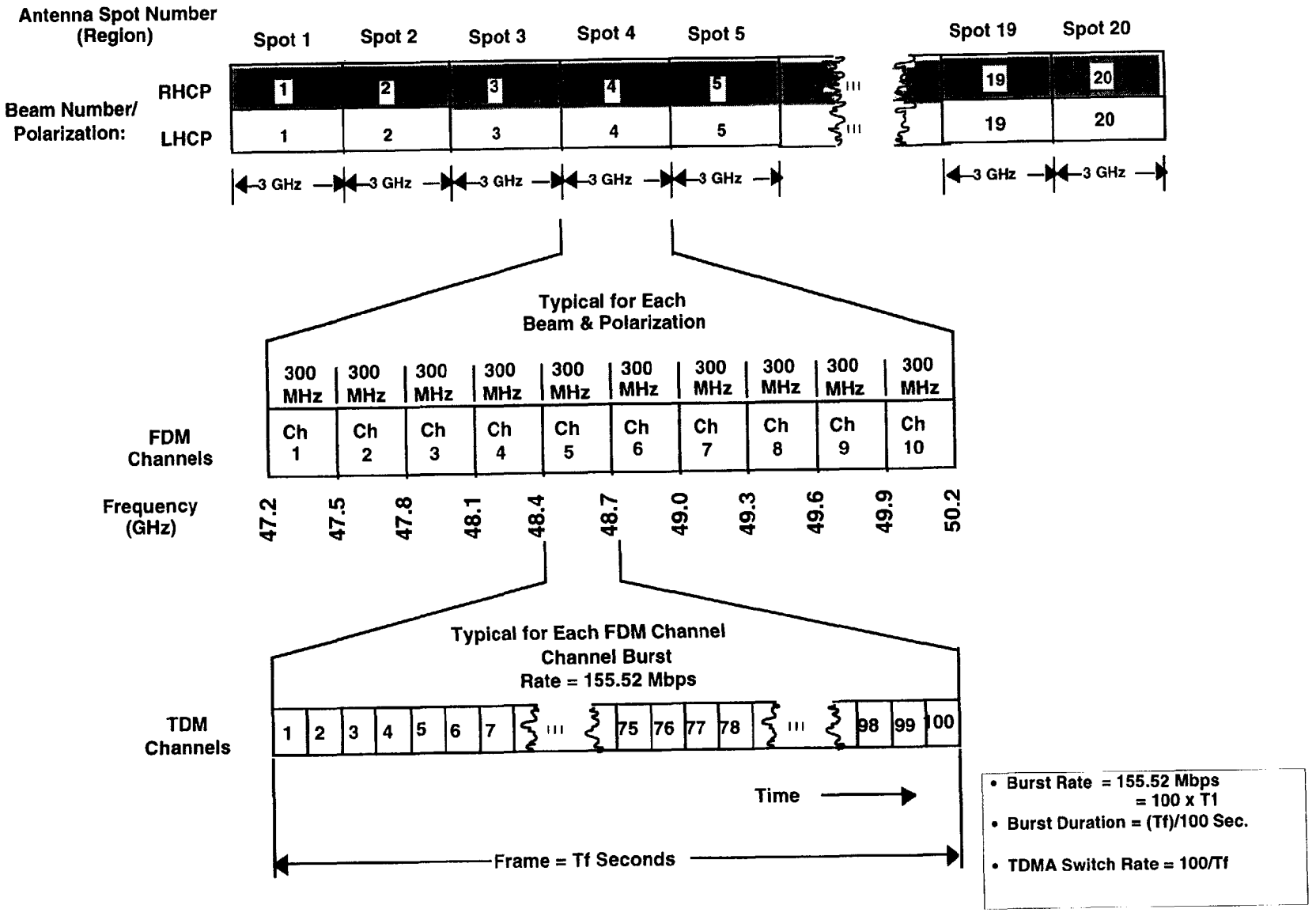

Figure 4.2.1-2. V-Band Uplink (Earth-to-Space) Frequency and Polarization Plan

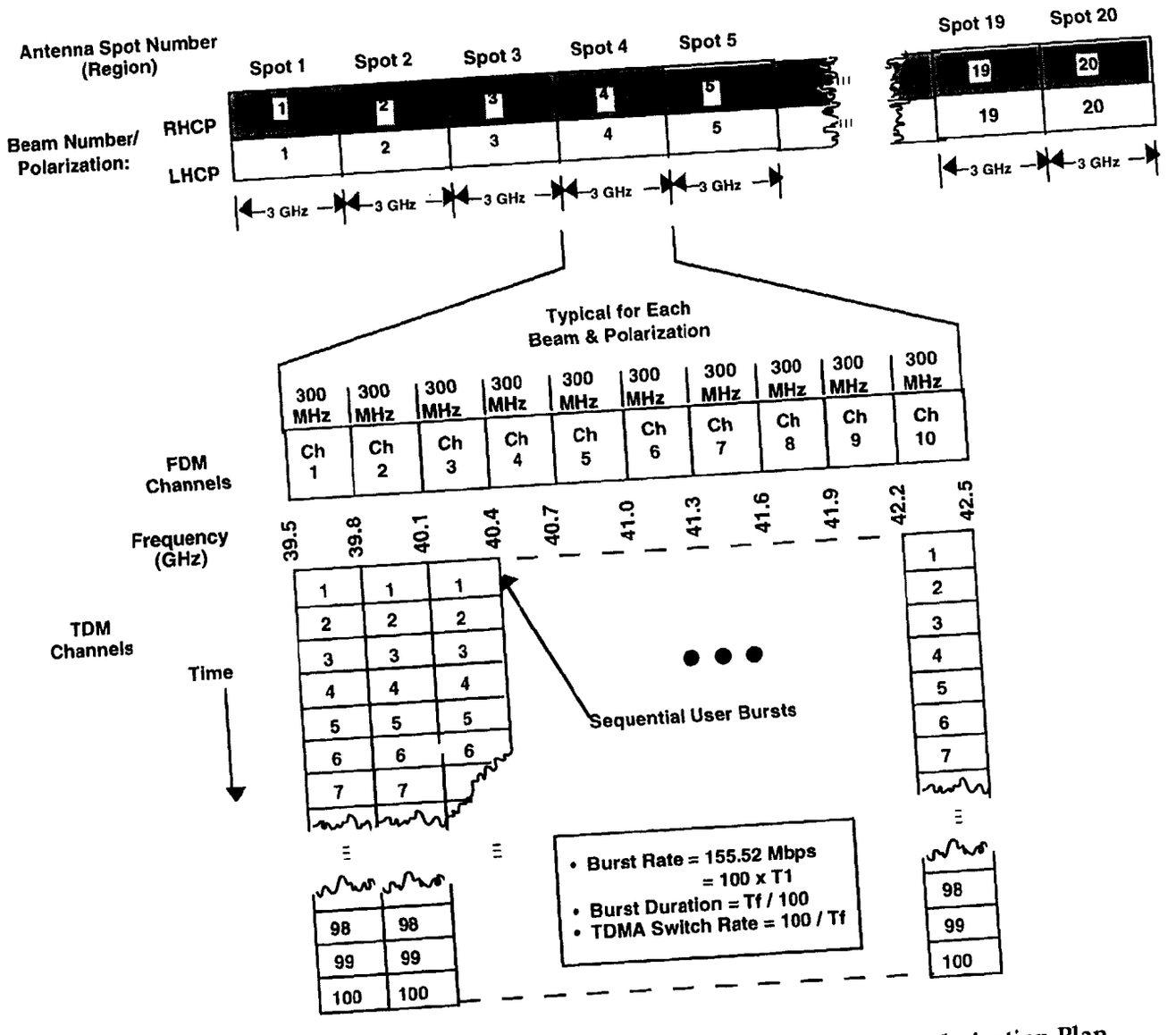

Figure 4.2.1-3. V-Band Downlink (Space-to-Earth) Frequency and Polarization Plan

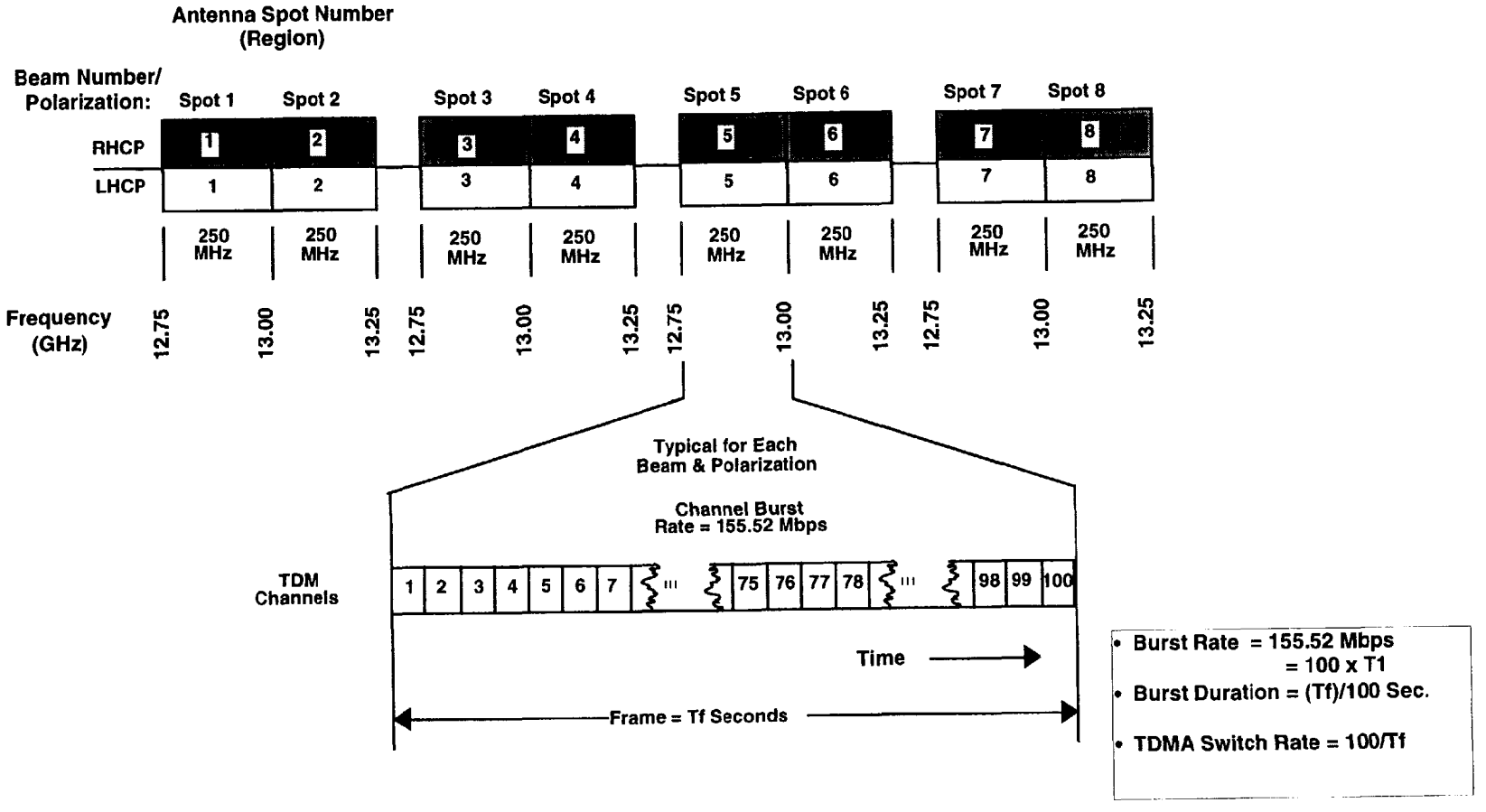

Figure 4.2.1-4. Ku-Band Communications Uplink (Earth-to-Space) Frequency and Polarization Plan (Specific Frequencies are Illustrative)