interactive mobile services has many significant components, which are discussed below.

3.2.1. Growth of the Enterprise Mobile Environment

Initially, wireless messaging and file transfer were the only data applications available to mobile workers. As use of the Internet has exploded, an urgent demand for new wireless data applications and for an expansion of wireless data capabilities has developed. The convergence of critical components has spurred the creation of a new technology sector -- enterprise mobile computing (EMC).

EMC is based on the need to develop a mobile computing/communications system to respond to changing business practices and workforce habits. A key component of EMC is the ability to get information and make decisions while physically separated from the location of the organization. Characteristics of EMC include: access to applications central to business operations, a hybrid of wired and wireless communications, middleware that links different devices, networks and software, and system integration to create solutions for the enterprise.

3.2.2. Customer Needs

Manufacturers of handheld devices have identified the primary needs of their customers as availability, effectiveness, interoperability, customer service, and cost. For users, Internet access and the ability to interface with their desktop computers are imperative. The StarLynx™ system will provide the key features users want: convenient, high data rate, affordable, and seamless connections to a wide variety of networks. StarLynx™ will enable high data rate communications that are cost-

insensitive to distance and give users the ability to work anywhere and collaborate effectively on virtually any task.

3.2.3. Market Segments

Sectors that have a greatly increased need for mobile communications include financial, manufacturing, construction, trade, services, and home workers. In the financial industry, banks, insurance companies, real-estate firms, financial managers, accountants, and auditors will use StarLynx™ services when they are "on the road" for real-time stock and price quotes, portfolio and account management, and videoconferencing. The manufacturing components of all industries will use StarLynx™ to support and coordinate the production process between factories and remote sites.

In the construction industry, architects and civil engineers will be able to transmit design information to and from construction sites, wherever they are located, around the world. The trade segment, comprised of wholesale, retail, transportation, and warehousing, will use StarLynx™ to maintain communication links along all points of the distribution chain. In the services industries, StarLynx™ will enable healthcare services, advertising, management consulting, legal services, entertainment, engineering, and scientific service providers to access large databases and to transport large files of time-sensitive information to and from any remote site. The rapidly growing number of small office/home office workers, which includes professional/technical consultants, telecommuters, and self-employed workers, will use StarLynx™ to keep in contact with clients through e-mail, audio/videoconferencing, and interactive workgroups.

Figure 3.2.3-1 shows the estimated 17.3 million U.S. portable computer users in six major segments, based on 1994 data, providing a very conservative indication of the potential number of users for StarLynx™ services.

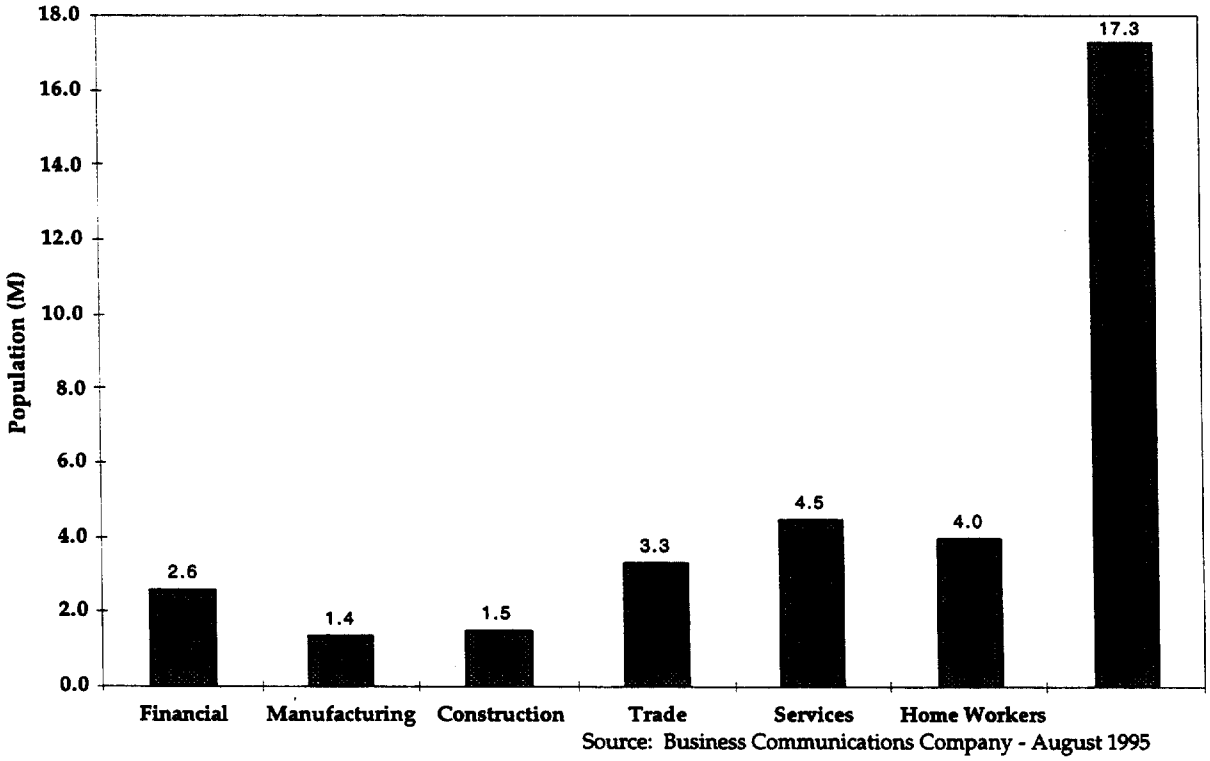

Figure 3.2.3-1. U.S. Portable Device Users by Market Segment

3.3. TECHNOLOGY ENABLERS

3.3.1 Applications

Future mobile applications will feature a synergistic blending of audio and video with traditional data that will permit users to communicate through networks using sound and images extensively. Many of these applications will call for interactive symmetric networking. Examples of new applications that will be widespread include audio/videoconferencing, computer-based training, video distribution, interactive television, collaborative design, industrial control, and interactive games.

The demand for interactive multimedia traffic in a mobile environment is enabled by innovations in network protocols, terminal miniaturization and video technology. To accommodate the high data rates needed for multimedia applications, large amounts of bandwidth, such as are available at V-band, will be required. StarLynx™ takes advantage of the latest technological innovations in satellite design including: vastly improved power available for communications, narrow spot beams, digital switching and optical ISL.

3.3.2. User Equipment

Through improved input methods, such as voice recognition and pen-based graphical interfaces, mobile and portable devices will become much more powerful and flexible. Continuing increases in computing power, reductions in device sizes, and decreases in device costs will result in greatly increased use of these devices.

3.4. Proposed Services

StarLynx™ will provide a wideband satellite communication service that allows users to connect to a wide variety of networks: PSTN, Internet, LANs, WANs, and others. Using a flat, thin, portable device approximately 30 X 30 cm in size, users will be able to stay in touch anywhere with two-way data rates of up to 2 Mbps. The devices will provide Internet access, e-mail, interactive workgroup applications, video conferencing, voice/fax capabilities, and interactive entertainment services.

StarLynx™ will also operate with a 60 x 60 cm antenna. This vehicle-mounted device, operating at data rates up to 8 Mbps, will provide users with all the capabilities of the portable device, as well as enhanced features that require higher

data rates, such as video downloading and large database and image transfer capabilities. Optional integrated GPS electronics will provide location-dependent information for additional applications. The vehicle device will also support intelligent navigation services, which will aid enterprise mobile workers in traffic, routing, and delivery tracking. StarLynx™ will enable mobile accident reports, calls for assistance, stolen vehicle tracking, and remote car door unlocking, for example, and will make these services available universally and at a lower cost than is possible today. StarLynx™ will also give airplane, train, truck, and automobile passengers access to video and audio entertainment of their choice.

StarLynx™ will give users with data-intensive applications the ability to roam freely within an office or school campus, in the wilderness, and while traveling and still maintain access to any network. Filmmakers will be able to create virtual studios on location anywhere. Medical personnel will be able to call up high-resolution images. Engineers will be able to download complex drawings and designs and to diagnose and repair equipment on site. Emergency-service workers will be able to photograph and transmit situational information immediately. Realtors will be able to transmit videos of property to mobile consumers. Educators will be able to call up color photographs and videos from any source and display them on handheld, portable and desktop computers in off-campus classrooms. Movie producers will be able to receive and transmit their work from remote locations.

THIS PAGE INTENTIONALLY LEFT BLANK

4. SYSTEM DESCRIPTION

4.1. SUMMARY OVERVIEW

StarLynx™ provides high data rate services to small portable and mobile terminals using V-Band spectrum through a hybrid GSO/MEO satellite constellation. The portable terminals (30 x 30 cm) can operate at up to 2.048 Mbps, and the mobile terminals (60 x 60 cm) can operate at up to 8.19 Mbps. This high data rate service to small teminals is possible because the system design employs high power and highly-directive spacecraft antennas beams and efficient signal design techniques (including coherent CDMA).

The space segment constellation consists of four GSO and 20 MEO satellites providing global coverage. User subscribers can make data requests via satellite and receive mobile downloads on demand from any digital data bank through the StarLynx™ System Access Node (SAN) links. An onboard regenerative and routing processor as well as steerable satellite antenna receive and transmit beams afford additional operational flexibility.

The ground segment Network Operating Center (NOC) works with the satellite onboard processor to control the user access requests. In addition it monitors service availability and capacity, beam management, and handovers throughout the system.

4.2. SIGNAL DESIGN AND FREQUENCY PLAN

The V-band spectrum affords wideband capacity and high data rates while using relatively small antenna apertures on the satellite and terminal. The frequency plan design employs extensive re-use of the V-band spectrum.

The practical design of the satellite antenna arrays requires that no adjacent beams at the same frequency be used in order to achieve adequate spatial isolation between each area beam. Use of Right and Left-Hand Circular Polarization (RHCP and LHCP) for the entire 1.1 GHz of requested bandwidth further increases isolation between adjacent beams. Utilizing the high frequency V-band, the relatively small satellite antenna apertures required to form small beamwidth footprint areas, and dual polarizations, the spectrum can be reused ten times per satellite.

The signal structure accommodates the maximum data rate of 8.192 Mbps to mobile devices. The selected baseband modulation is Quadraphase Shift Keying (QPSK), with convolutional-concatenated, Reed-Solomon, error-correction coding. Large clock interleaver registers are also used to address shadowing fades.

StarLynx™ uses a combination of FDMA (Frequency Division Multiple Access) and CCDMA (Coherent Code Division Multiple Access) to orthogonalize the user signals. The signal design allows flexible data rates. Reducing the data rate in binary ratios correspondingly increases the number of users that can be accommodated in a particular CDMA slot.

The selected sub-beam bandwidth is 270.336 MHz. This allows three FDMA slots per sub-beam. This design, together with dual polarization, increases isolation between adjacent beams and allows dense coverage of high demand areas. One of two different beam laydown patterns will be chosen in a given geographic region, depending on demand.

Figure 4.2-1 shows the sub-beam frequency and polarization options and an illustrative beam laydown pattern for the GSO and MEO satellites. In areas of high

demand, two 257-MHz band segments can be deployed to maximize service capacity in the same geographic area (the dual beam pattern). Figure 4.2-2 shows the detailed frequency plan for GSO and MEO satellites.

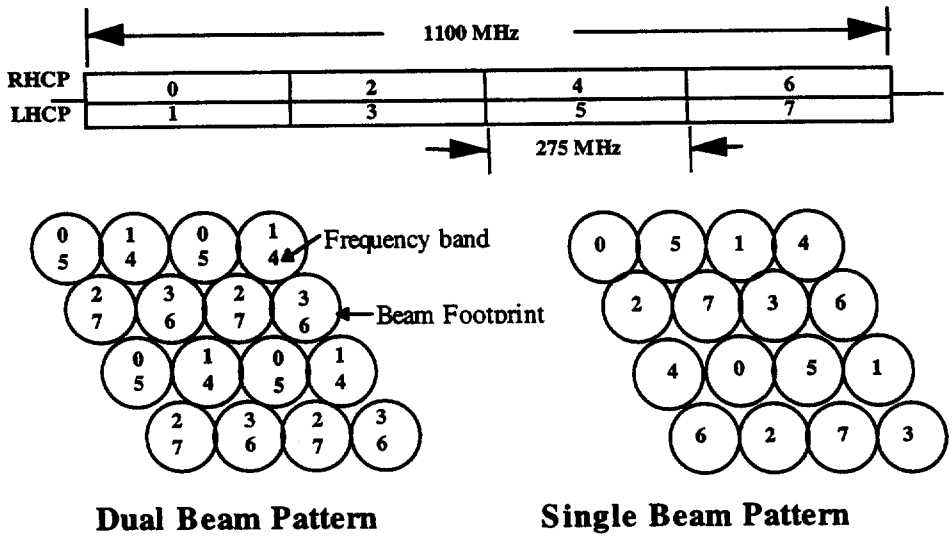

Figure 4.2-1. GSO and MEO Beam Frequency Options

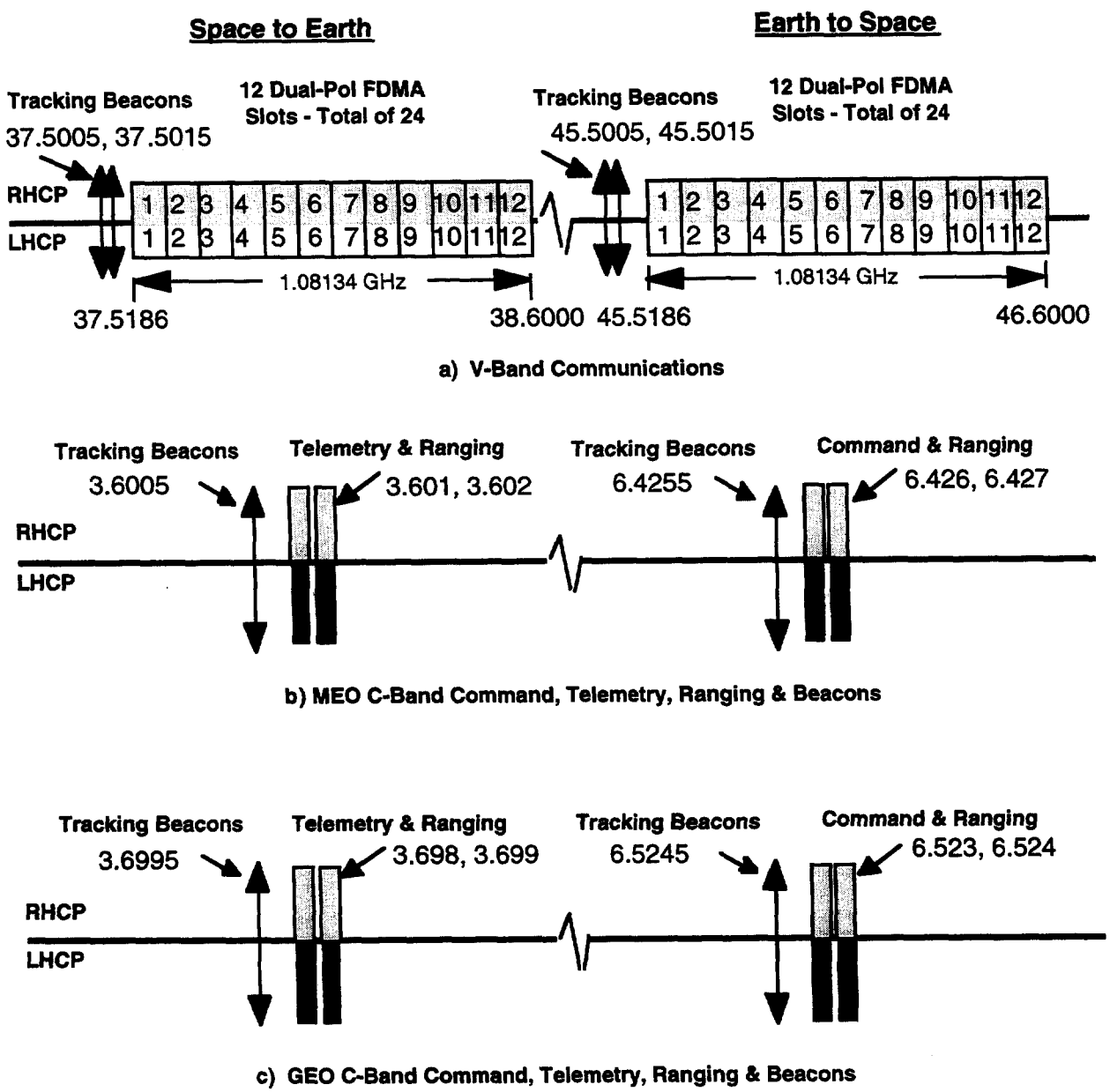

Figure 4.2-2. GSO and MEO Frequency Plan

Both the MEO and GSO satellites use the same uplink and downlink bands. The uplink frequency spectrum is 1.1 contiguous GHz within 45.5 to 46.7 GHz and the downlink frequency spectrum is 37.5 to 38.6 GHz. Figure 4.2-3 illustrates the signal design.

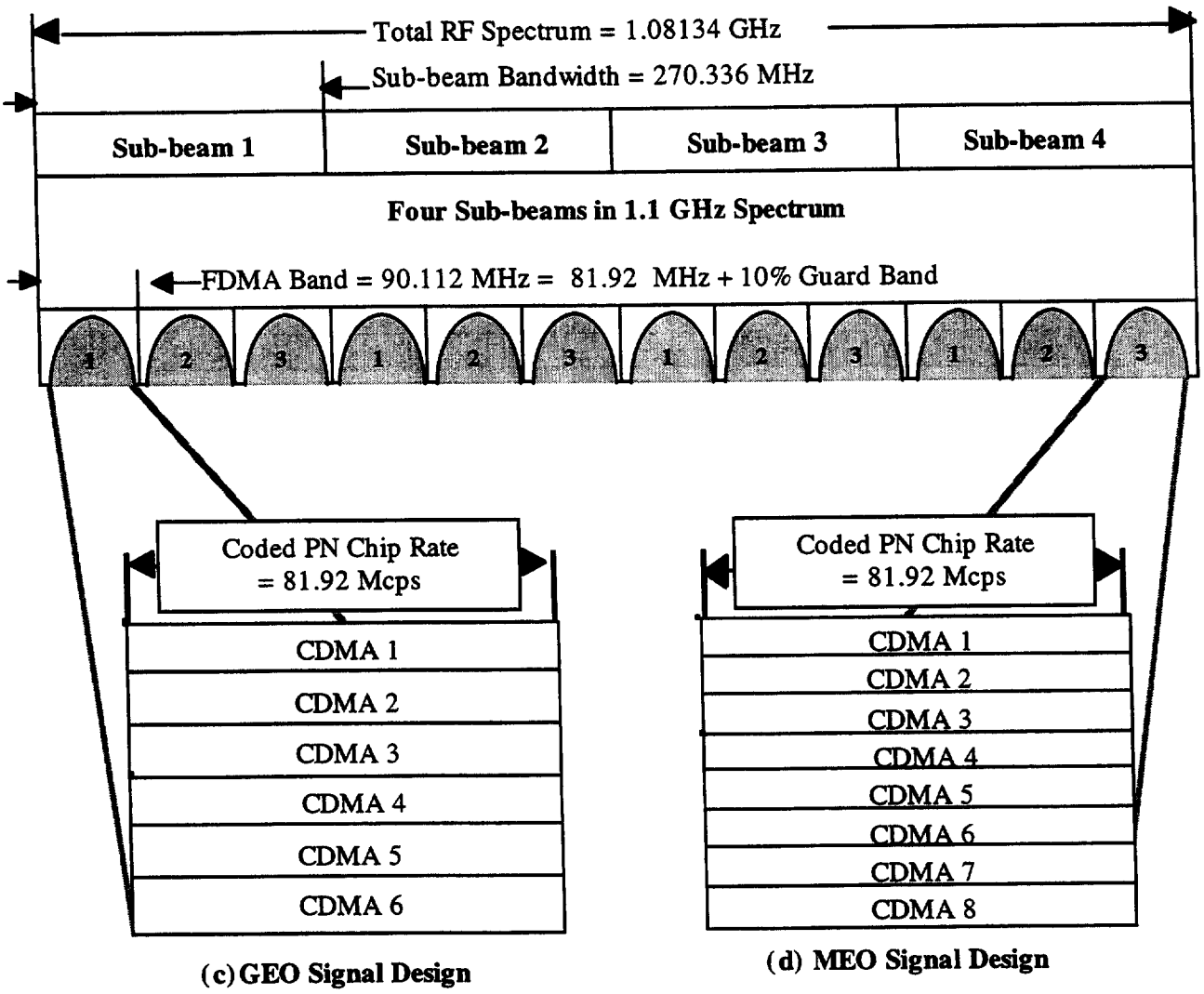

Figure 4.2-3. FDMA/CDMA User Multiple Access Design

4.3. EMISSION DESIGNATORS

Table 4.3-1 lists the emission designators for the StarLynx™ system communications links.

Table 4.3-1. Emission Designators

Signal	Number of Emmissions	Emission Designator
V-Band Communications Uplink	24	90M0G7DDC
V-Band Communications Downlink	24	90M0G7DDC
C-Band Command	8	1M50G9DXF
C-Band Telemetry	8	1M50G9DXF
C-Band Beacon Uplink	4	100KNONXN
C-Band Beacon Downlink	4	100KNONXN
V-Band Beacon Uplink	4	100KNONXN
V-Band Beacon Downlink	4	100KNONXN

4.4. Power Flux Density (PFD) Compliance

StarLynx™ system requires various communication links including: (1) V-band data, (2) V-band beacon, (3) C-band TT&C, and (4) C-band beacons for satellites in both GSO and MEO constellations. Per Section 25.208(c) of the Commission's Rules and international Radio Regulation (RR) S21-16, the required PFD thresholds for elevation angles above 25° are listed in Table 4.4.1.[1]

Table 4.4-1. Limits of PFD from Space Station

Frequency Band	Max PFD Limit	Elevation Angles	Frequency Range	Regulatory Reference
V	-105 (dBW/m^2) in 1 MHz	25°-90°	37.0-40.5 GHz	RR S21-16
C	-142 (dBW/ m^2) in 4 kHz	25°-90°	3.4-4.2 GHz	RR S21-16

For medium Earth orbit, the maximum power flux density at V-band in any 1 MHz is:

$$\text{EIRP} - 10 \log (4 \pi r^2) - 10 \log (270) =$$
$$55.8 - 10 \log (4 \pi \, 10{,}352{,}080^2) - 24.3 =$$
$$-119.8 \text{ dBW/m}^2\text{/MHz}$$

where 270 MHz is the signal occupied bandwidth.

---

[1] StarLynx™ system provides communications to areas above 30° elevation angle through small spot beams. PFD values to areas below 25° elevation angle are at least 20 dB below the value at beam peak and thus are omitted in Table 4.4.2.

For geostationary orbit, the maximum power flux density at V-band in any 1 MHz is:

$$70.5 - 10 \log (4 \pi 35{,}788{,}293^2) - 24.3 =$$
$$-115.9 \text{ dBW/m}^2\text{/MHz}$$

These values are for a 90° angle of arrival. For any other angle of arrival, the free space loss will be higher, resulting in a lower power flux density on the ground.

The beacon and telemetry signals maximum PFDs are summarized in Table 4.4-2. These values are within the limits of CFR § 25.208 and RR S21-16 as listed in Table 4.4-1.

Table 4.4-2. StarLynx™ PFD

Signal	EIRP (dBW)	Slant Range (km)	Sig/Req. BW Ratio (Hz)	StarLynx™ PFD	PFD Limit	PFD Unit
GSO Feeder Link (V)	70.5	35788	(270/1)M	-115.9	-105	(dBW/m²/MHz)
MEO Feeder Link (V)	55.8	10352	(270/1)M	-119.8	-105	(dBW/m²/MHz)
GSO Telemetry (C)	8	35788	(1500/4)K	-179.8	-142	(dBW/m²/4kHz)
MEO Telemetry (C)	8	10352	(1500/4)K	-169.0	-142	(dBW/m²/4kHz)
GSO Beacon (V)	12	35788	NA	-150.1	-105	(dBW/m²/MHz)
MEO Beacon (V)	12	10352	NA	-139.3	-105	(dBW/m²/MHz)
GSO Beacon (C)	9	35788	NA	-153.1	-142	(dBW/m²/4kHz)
MEO Beacon (C)	9	10352	NA	-142.3	-142	(dBW/m²/4kHz)

4.5. Space Segment

GSO and MEO satellites will be Hughes high-power, three-axis body-stabilized vehicles, and will be an extension of existing Hughes product lines. All GSO satellites will be technically identical, and some or all of them may scan their beams to cover larger areas of the U.S. Intersatellite links will utilize a laser (optical) communication payload.

Figure 4.5-1 illustrate the GSO satellite. Tables 4.5-1 and 4.5-2 provide a summary of GSO and MEO satellite characteristics.

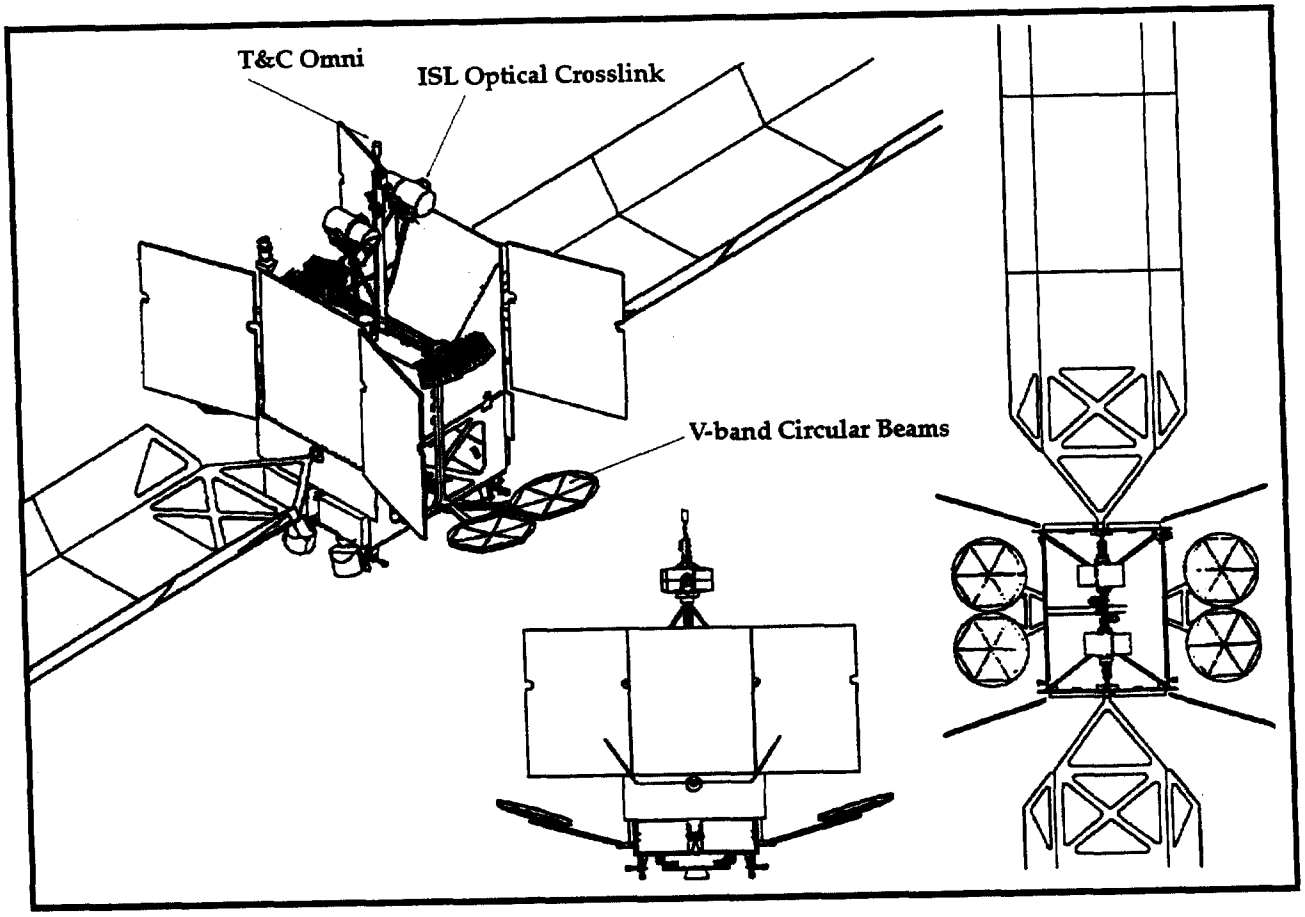

Figure 4.5-1. GSO Satellite

Table 4.5-1. General Characteristics of GSO StarLynx™ Satellite

Satellite Bus	Derived from Hughes' GSO Product Line
Mission Life	15 Years End-of-Life
Stabilization	3 Axis Earth Sensor and Beacon Momentum Wheels and Thrusters
DC Power	17 KW Beginning-of-Life 15 KW End-of-Life
Eclipse Capability	100%
Approximate Weight	5500 Kgs with Propellant 3500 Kgs without Propellant
Uplink Data Antenna	2 V-Band Reflectors
Downlink Data Antenna	2 V-Band Reflectors
T&C Antenna	C-Band Uplink Antenna Command Receive C-Band Downlink Antenna Telemetry Transmit C-Band Omni Antenna
Number of CMD Channels	2
Number of TLM Channels	2

Table 4.5-2. General Characteristics of MEO StarLynx™ Satellite

Satellite Bus	Derived from Hughes' MEO Product Line
Mission Life	12 Years End-of-Life
Stabilization	3 Axis Earth Sensor and Beacon Momentum Wheels and Thrusters
DC Power	17 KW Beginning-of-Life 15 KW End-of-Life
Eclipse Capability	100%
Approximate Weight	3500 kgs with Propellant 3050 kgs without Propellant
Uplink Data Antenna	4 V-Band Receive arrays
Downlink Data Antenna	4 V-Band Transmit arrays
T&C Antenna	C-Band Data Antenna Command Receive C-Band Data Antenna Telemetry Transmit C-Band Omni Antenna
Number of Command Channels	2
Number of Telemetry Channels	2

4.5.1. Communications Subsystem

4.5.1.1. V-Band Subsystem

The V-band communications subsystem consists of the receive and transmit antenna assemblies, the onboard processor assembly, and the receive and transmit RF assemblies.

Table 4.5 summarizes the key antenna parameters of the spacecraft segment. The MEO V-band antennas consist of a set of four, eight-beam, direct-radiating arrays, transmit antennas for the downlink, and four phased-array receive antennas for the uplink. Both receive and transmit antennas form a total of 32 beams in the field of view of each of the MEO satellites.

The GSO V-band antennas consist of two reflectors for the downlink and two reflectors for the uplink. Each GSO satellite in the constellation will select up to 40 movable spot beams out of a possible 204 in its field of view.

Appendix C shows antenna coverage patterns.

Table 4.5.1-1. Satellite Antenna Characteristics

• GSO Satellite
  • Forty 0.15 ° Beams out of a Possible 204, each with 100 W HPA
  • Directivity at EOC: 54.6 dBi
  • Beams Formed with Multi-Beam Array and TWTAs

• MEO Satellite
  • Thirty-two 0.6° Beams, each with EIRP of 55 dBW per Beam
  • Directivity at EOC: 42.8 dBi
  • Beams Formed with Phase Array (4 apertures, each with 8 beams)

The onboard processor is regenerative, performing full demodulation and remodulation of the QPSK CCDMA signal. The onboard processor also provides the ancillary functions of the CCDMA acquisition and tracking, PN de-spreading/re-spreading, decoding/recoding of the convolutional, Reed-Solomon error correction codes, and block de-interleaving/re-interleaving of the digital beam stream. The processor performs all traffic routing, including the laser intersatellite links.

The receive RF assembly provides the Low-Noise Amplifier (LNA), FDMA demultiplexer, and IF downconversion of the uplink signals. The transmit RF assembly performs the necessary multiplexing, upconversion, and (for the GSO satellite) the TWTA transmission components.

Figure 4.5.1-1 shows the communications subsystem block diagram. The GSO satellites process 40 beams and employ two multi-beam array (MBA) reflector designs each for receive and transmit antenna functions. A scanning function may be utilized on the GSO satellites. The MEO satellites process 32 tracking beams via four receive and transmit arrays and have multiple ISLs.

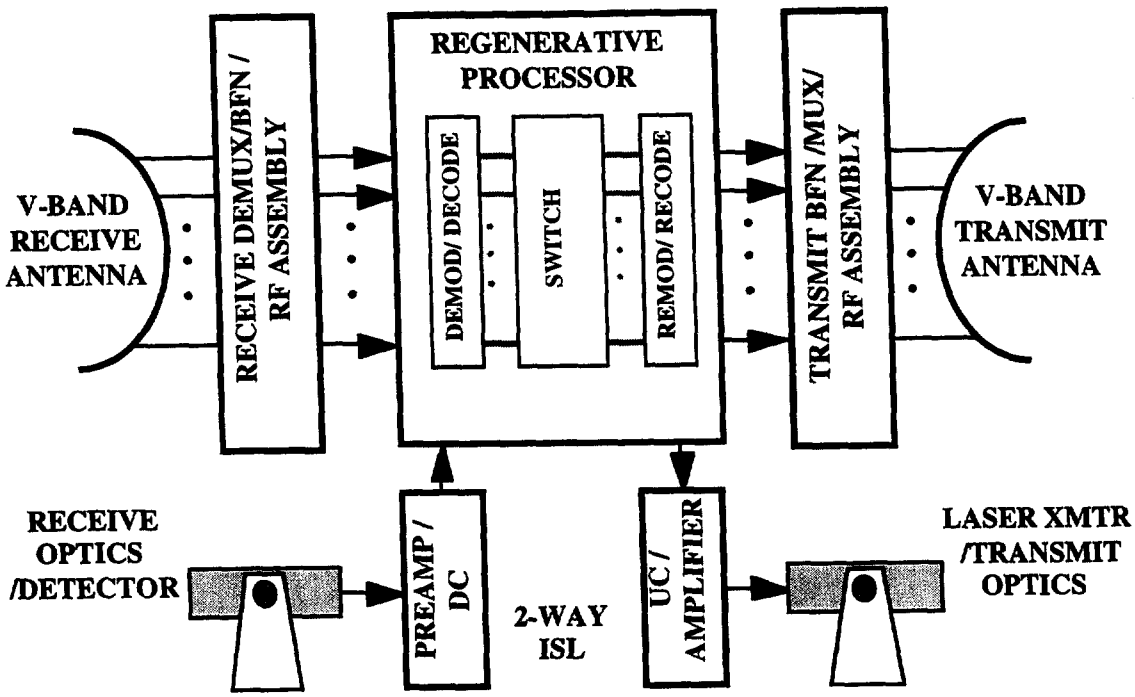

Figure 4.5.1-1. Communications Subsystem Block Diagram.

V-band communications establish links between MEO and GSO satellites to the user terminals as well as the SAN terminals. Table 4.5.1-2 lists communication parameters for these links.

Table 4.5.1-2. V-Band Communication Link Parameters

Parameter	Narrow-Beam GSO	Scanned-Beam GSO	Narrow-Beam MEO
Modulation Format	QPSK	QPSK	QPSK,
Code Design	Convolutional Concatenated Reed Solomon	Convolutional Concatenated Reed Solomon	Convolutional Concatenated Reed Solomon
Up/Downlink Bit Error Rate	10^{-9}	10^{-9}	10^{-9}
	Link Budget Data Rates		
Mobile User Terminal	8.192 Mbps	1.2 Mbps	6.011 Mbps
Portable User Terminal	2.048 Mbps	0.3 Mbps	1.544 Mbps
Mobile-SAN Terminal	8.192 Mbps	1.2 Mbps	6.011 Mbps
Portable-SAN Terminal	2.048 Mbps	0.3 Mbps	1.544 Mbps
SAN Terminal-Mobile	8.192 Mbps	1.2 Mbps	6.011 Mbps
SAN Terminal-Portable	2.048 Mbps	0.3 Mbps	1.544 Mbps
Uplink Frequencies	45.5 to 46.7 GHz	45.5 to 46.7 GHz	45.5 to 46.7 GHz
Downlink Frequencies	37.5 to 38.6 GHz	37.5 to 38.6 GHz	37.5 to 38.6 GHz
RF Bandwidth	1.1 GHz	1.1 GHz	1.1 GHz

4.5.1.2. Intersatellite Link Subsystem

Intersatellite links (ISLs) provide connectivity between users located in the same region or globally. Each GSO satellite will have two intersatellite links -- one ISL to a MEO satellite and the second to another GSO satellite. Each MEO satellite will have five intersatellite links -- four to adjacent MEO satellites (two MEOs in the same plane and one MEO each in two adjacent planes) and one to a GSO satellite. The ISLs also enable the application of additional resources to high demand areas. The ISLs use a laser communications subsystem in the 1.55 micron region with a 3 Gbps data rate.

4.6. MAJOR SATELLITE SUBSYSTEMS

4.6.1. Antenna Subsystem

4.6.1.1. GSO Satellite Antennas

The GSO satellite antennas consist of the following:

- Two east-mounted parabolic reflectors, dual circularly polarized V-band transmit and receive antennas, providing 102 of the 204 possible coverage beams.
- Two west-mounted parabolic reflectors, dual circularly polarized V-band transmit and receive antennas, providing 102 of the 204 possible coverage beams.
- Two optical intersatellite link telescope assemblies.
- One nadir bicone and two pipe antennas, dual linearly polarized omnidirectional antenna system, providing TT&C services.

4.6.1.1.1. GSO V-Band Antennas

Two east-mounted and two west-mounted multifeed antenna assemblies provide the V-band coverage for GSO satellites. The offset parabolic reflectors deploy from the east and west side of the satellite; the feed arrays are mounted to the nadir face and do not deploy. A 51-horn, dual-circularly polarized feed array illuminates each reflector. Each horn of the feed array is diplexed for both transmit and receive frequencies. In addition, each horn provides either a single circular polarization or dual circular polarization. Consequently there are 408 total input ports to the 204 horns that comprise the V-band antenna assemblies. Up to forty of the possible 408 inputs are selected for operation. Each feed adjusts over a range of plus or minus one-half beamwidth in azimuth and elevation over a 0.3° footprint

area. The scanning function can be commanded by ground control to dynamically scan beams over 0.3° areas, covering the contiguous U.S.

4.6.1.1.2. GSO Intersatellite Link Aperture

The optical intersatellite link has two nine-inch laser telescope assemblies. The optical ISL will operate in the 1.55 micron wavelength region.

4.6.1.1.3. GSO TT&C Antenna

The telemetry and command omni antenna consists of two stacked bicone antennas and separate nadir and aft pipes. The bicone antennas provide toroidal radiation patterns and the pipe antennas, when used in conjunction with the bicones during transfer orbit, provide near 4π steradian coverage.

4.6.1.2. MEO Satellite Antennas

The MEO design consists of the following:

- Four nadir-mounted phased array antennas for V-band transmit service.
- Four nadir-mounted phased array antennas for V-band receive service.
- Five optical intersatellite link telescope assemblies.
- One nadir bicone and two pipe antennas; dual linearly polarized omnidirectional antenna system, providing TT&C services.

4.6.1.2.1. MEO V-Band Antennas

The V-band service antennas for the MEO satellites consist of eight phased array assemblies. Four transmit and four receive assemblies each contain eight array elements. Each can process 32 steerable beams simultaneously. The steerable beams can track specific locations within a 38° field of view on orbit to minimize beam-to-beam handoffs as the MEO satellite passes overhead. The selected beam size of 0.6°

from an altitude of 10,352 km results in a 130 km diameter service region on the ground. Appendix D contains representative antenna patterns for the MEO satellites.

4.6.1.2.2. MEO Intersatellite Link Aperture

Five nine-inch laser telescope assemblies provide the optical intersatellite link service to adjacent MEO satellites and one GSO satellite. The optical intersatellite link will operate in the 1.55 micron wavelength region.

4.6.1.2.3. MEO TT&C Antenna

The C-band planar array antenna receives the uplink commands and beacon tracking signals. The telemetry and command omni antenna consists of two stacked bicone antennas and separate nadir and aft pipes. The bicone antennas provide toroidal radiation patterns and the pipe antennas, when used in conjunction with the bicones during transfer orbit, provide near 4π steradian coverage.

4.6.2. Thermal Control Subsystem

The GSO downlink high power traveling wave tube amplifiers (TWTAs) and the MEO satellite high-power transmit arrays require a majority of the onboard power consumption. The satellite has a thermal design that allows for customized heat dissipation with the use of heat pipes and radiator panels. The design has additional out-board radiator panels that also contain heat pipes that extend beyond the normal body of the satellite for maximum thermal dissipation.

The size of the out-board radiator panels is governed by the launch vehicle dimensions, satellite antennas, and the amount of thermal dissipation required. Satellite blankets and electrical heaters aid in temperature management. On-board

temperature sensors feed information to the telemetry subsystem, which sends the information to the ground or the on-board Satellite Control Unit. With the use of the Satellite Control Processor, the temperature can be maintained autonomously for up to thirty days without any input from the ground control facility.

4.6.3. Attitude Control Subsystem (ACS)

4.6.3.1. Pointing

The GSO ACS design uses proven technology from operational systems. It controls the transfer orbit and on-station pointing with the following sensors: Sun Sensor, Earth Sensor Assembly (ESA), and RF Beacons. The GSO design has the capability to auto-track the satellite body and reflectors when the ACS processes individual beacons. Pointing control uses reaction wheels and pulsed firing of selected thrusters.

The pointing of MEO satellites uses a zero momentum system for Sun Nadir Steering.

4.6.3.2. Reaction Wheels

One of three available reaction wheels will be selected depending on the momentum storage requirements of the satellite. The reaction wheel will be sized accordingly and will account for different solar panel array configurations and storage capability.

4.6.4. Propulsion Subsystem

In transfer orbit, the GSO satellites use a liquid bipropellant propulsion system. This bipropellant system uses proven technology from operational systems. It uses hypergolic propellant: nitrogen-tetroxide (N_2O_4) oxidizer and monomehtyl-

hydrazine (MMH) fuel. The Xenon Ion Propulsion System (XIPS) controls the satellite orbit and altitude throughout its 15 year life in orbit. The MEO satellites will utilize a monopropellant system.

4.6.5. Electrical Power Subsystem

The GSO satellite supplies at least 15 kW for all of the on-board electronics. The fundamental components of the electrical system include:

- Five panel system per solar array.
- Sixty cells for 328 Amp hour battery.
- An Integrated Power Controller.

The MEO satellite utilizes a four panel solar array system to support an 8.8 kW capacity, with full operation in eclipse condition.

4.6.6. TT&C Subsystem

The TT&C subsystem will perform the monitoring and command functions necessary for satellite control for launch and on-station operations. Figure 4.6.6-1 shows the TT&C subsystem block diagram.