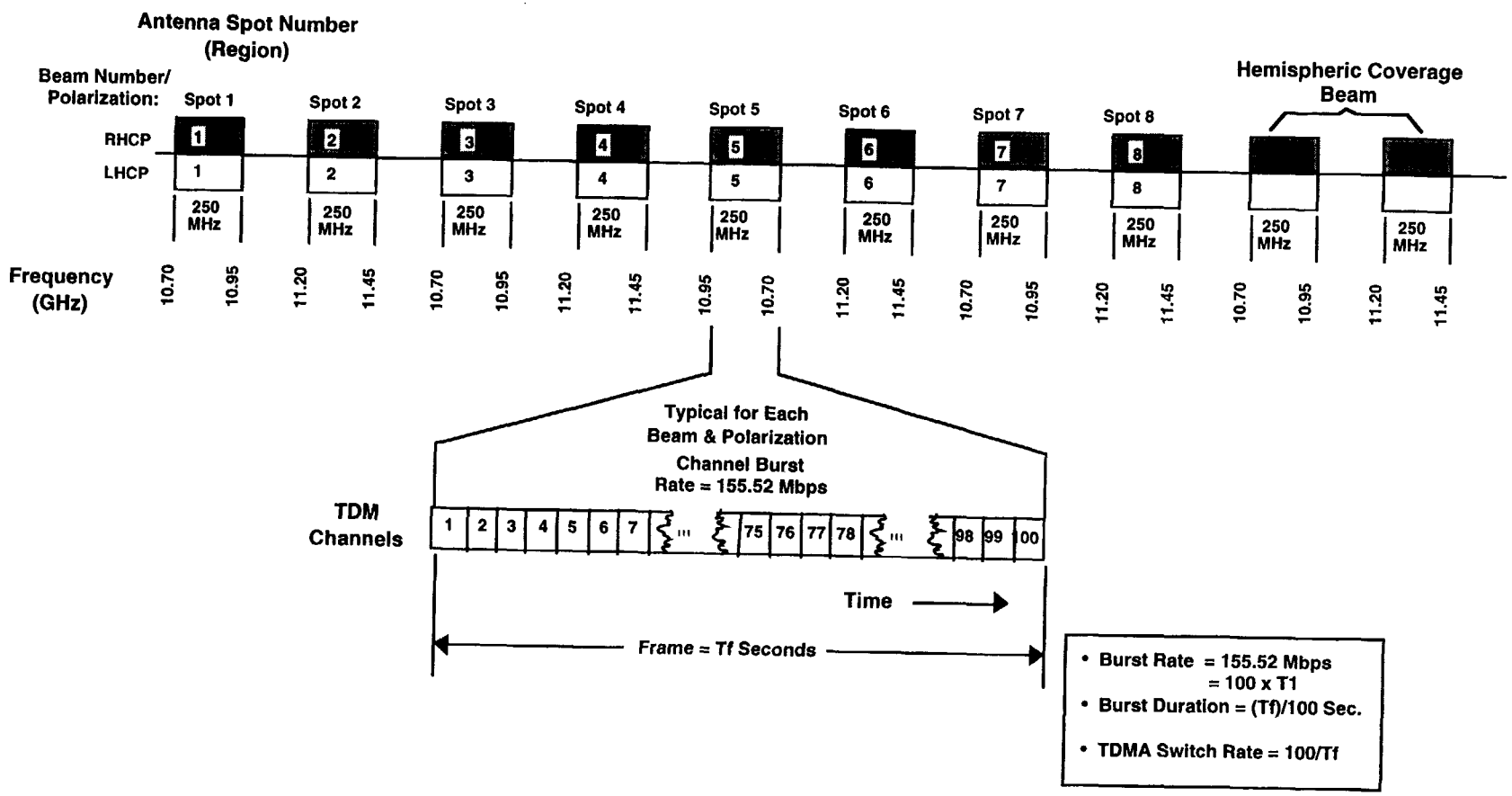

Figure 4.2.1-5. Ku-Band Communications Downlink (Space-to-Earth) Frequency and Polarization Plan (Specific Frequencies are Illustrative)

4.3. Emission Designators

Uplink V-band communications to Expressway™ satellites will use a pulse code modulation, differential quadriphase shift key (PCM/DQPSK) format. Each dual-polarized V-band beam will contain ten 300 MHz wide frequency division multiplexed (FDM) channels. Each FDM channel will in turn be time shared (TDM) by 100 users with a burst rate of 155.52 Mbps. Downlink communications will also use the PCM/DQPSK format.

Each dual-polarized Ku-band uplink 1° X 3° (elliptical) communications beam will have a single carrier within 250 MHz of bandwidth time shared (TDM) by users using the same PCM/DQPSK modulation format. Users will burst data to the satellite at a rate of 155.52 Mbps if linking to the satellite via a 1° X 3° beam and 100 Mbps if linking to the satellite via a 6° beam. Each downlink carrier will use the PCM/DQPSK format in a continuous, non-burst mode.

Both V-band and Ku-band channels reserve approximately 5% of their bandwidths for guard bands.

Commands to the satellites from the earth control segment will be performed at Ku-band using PCM/FSK/PM modulation. Range tones transmitted to the satellite on the Ku-band command carrier will be transponded and phase modulated onto the downlink Ku-band telemetry carrier. Telemetry data will be transmitted using a PCM/PSK/PM modulation format. Unmodulated Ku-band beacons will also be transmitted to and from the satellites for attitude control and antenna pointing. Command, telemetry, ranging, and beacons will occupy the

lower band edges of the uplink and downlink Ku-band allocations. Table 4.3-1 lists the various signals as well as their emission designators.

Table 4.3-1 Emission Designators

Signal	Number/Beam	Emission Designator
Ku-band Communications Uplink	1	240MG1DDT
Ku-band Communications Downlink	1	240MG1DDT
V-band Communications Uplink	10	285MG1DDT
V-band Communications Downlink	10	285MG1DDT
Ku-band Command	1	1M50G9DXF
Ku-band Telemetry	1	1M50G9DXF
Ku-band Receive Beacons (one per polarization)	1	100K7N0NXN
Ku-band Transmit Beacons (one per polarization)	1	100K7N0NXN
V-band Receive Beacons (one per polarization)	1	100K7N0NXN
V-band Transmit Beacons (one per polarization)	1	100K7N0NXN

4.4. Power Flux Density Compliance

4.4.1. V-Band Communications

At present, no power flux density (PFD) requirement is specified in the FCC Rules for emissions in the 39.5-42.5 GHz band used by Expressway™ for the communications downlink. International Radio Regulations (RR) S21.16 specifies limits that apply to the 31.0-40.5 GHz band. According to S21.16.4, these limits will apply to the band until limits applying specifically to the 31.0-40.5 GHz band are endorsed by a competent World Radio Conference. No international PFD limits have been specified for frequencies above 40.5 GHz. Using the PFD requirements of S21.16, emissions from the satellite shall not exceed: (a) -115 dB (W/m^2) in any 1 MHz band for angles of arrival between 0 and 5 degrees above the horizontal plane; (b) -115 + 0.5(d-5) (W/m^2) in any 1 MHz band for angles of arrival d (degrees) between 5 and 25 degrees above the horizontal plane; (c) -105 dB

(W/m^2) in any 1 MHz band for angles of arrival between 25 and 90 degrees above the horizontal plane.

Because the occupied bandwidth is approximately 285 MHz for any single carrier, the PFD in any 1 MHz band is given by:

PFD ($dBW/m^2/MHz$) = Satellite Carrier EIRP (dBW) - 20 log (Slant Range) - 71 - 10 log (285 MHz/1 MHz)

Table 4.4.1-1 gives the Expressway™ V-band PFD as a function of elevation angle. In all cases Expressway™ complies with the limits assumed with more than a 16 dB margin for all elevation angles above the horizon.

Table 4.4.1-1. V-Band Communications Power Flux Densities

Maximum PFD Requirement ($dBW/m^2/MHz$)	Elevation Angle (degrees)	Slant Range (km)	Expressway™ Power Flux Density ($dBW/m^2/MHz$)	Margin (dB)
-115	0	41,680	-131.9	16.9
-115	5	41,128	-131.8	16.8
-105	25	39,072	-131.4	26.4
-105	90	35,787	-130.6	25.6

4.4.2. Ku-Band Communications

4.4.2.1 FCC Rules

Expressway™ Ku-band FSS downlink communications will take place in either the planned, extended, and/or standard bands, or any combination of these bands for a total of 500 MHz of bandwidth. Power flux density limits specified in 47 CFR 25.208(b) are for 10.95-11.2 and 11.45-11.7 GHz. Applying those limits, the PFD at the earth's surface produced by a satellite for all methods of modulation shall not exceed: (a) -150 $dB(W/m^2)$ in any 4 kHz band for angles of arrival

between 0 and 5 degrees above the horizontal plane; (b) -150 + (d-5)/2 dB(W/m^2) in any 4 kHz band for angles of arrival d, between 5 and 25 degrees above the horizontal plane; and (c) -140 dB(W/m^2) in any 4 kHz band for angles of arrival between 25 and 90 degrees above the horizontal plane. A single, Ku-band carrier will be used to support TDM data rates up to an OC-3 rate (155.52 Mbps) in a beam with an occupied bandwidth of 240 MHz. The Ku-band PFD in any 4 kHz band is thus given by:

PFD (dBW/m^2/4 kHz) = Satellite Carrier EIRP (dBW) - 20 log(Slant Range) - 71 - 10 log (240 MHz/4 kHz)

Table 4.4.2.1-1 gives the Expressway ™ PFD as a function of elevation angle for the 1° x 3° Ku-band beam, which results in the highest satellite EIRP. In all cases, Expressway™ complies with the PFD limits with more than 14 dB margin for all angles above the horizon.

Table 4.4.2.1-1. FCC Ku-Band Communications Power Flux Densities

Maximum PFD Requirement (dBW/m^2/4 KHz)	Elevation Angle (degrees)	Slant Range (km)	Expressway™ Power Flux Density (dBW/m^2/4 kHz)	Margin (dB)
-150	0	41,680	-164.2	14.2
-150	5	41,128	-164.1	14.1
-140	25	39,072	-163.6	23.6
-140	90	35,787	-162.9	22.9

4.4.2.2 International Requirements

International PFD requirements that apply to Expressway™'s Ku-band downlink transmission are taken from Radio Regulation S21.16.

The power flux density at the earth's surface produced by emissions from a satellite for all conditions and for all methods of modulation shall not exceed the following for frequencies between 10.7 GHz and 11.7 GHz: (a) -150 dB(W/m^2) in any 4 kHz band for angles of arrival between 0 and 5 degrees above the horizontal plane; (b) -150 + 0.5(d-5) dB(W/m^2) in any 4 kHz band for angles of arrival d (in degrees) between 5 and 25 degrees above the horizontal plane; and (c) -140 dB(W/m^2) in any 4 kHz band for angles of arrival between 25 and 90 degrees above the horizontal plane. Table 4.4.2.-2-1 gives the Expressway™ Ku-band PFD as a function of elevation angle for the 1° X 3° Ku-band beam, which results in the highest satellite EIRP. As shown in this table, Expressway™ complies with the international Radio Regulations with more than a 14 dB margin.

Table 4.4.2.2-1. International Ku-Band Communications Power Flux Densities (10.7-11.7 GHz)

Maximum PFD Requirement (dBW/m^2/4 kHz)	Elevation Angle (degrees)	Slant Range (km)	Expressway™ Power Flux Density (dBW/m^2/4 kHz)	Margin (dB)
-150	0	41,680	-164.2	14.2
-150	5	41,128	-164.1	14.1
-140	25	39,072	-163.6	23.6
-140	90	35,787	-162.9	22.9

According to S21.16, the power flux density at the earth's surface produced by emissions from a satellite for all conditions and for all methods of modulation shall not exceed the following for frequencies between 12.2 and 12.75 GHz: (a) -148 dB(W/m^2) in any 4 kHz band for angles of arrival between 0 and 5 degrees above the horizontal plane; (b) -148 + 0.5(d-5) dB(W/m^2) in any 4 kHz band for angles of arrival d, between 5 and 25 degrees above the horizontal plane; and (c) -138

dB(W/m^2) in any 4 kHz band for angles of arrival between 25 and 90 degrees above the horizontal plane. Table 4.4.2.2-2 gives the Expressway™ Ku-band PFD as a function of elevation angle for the 1° X 3° Ku-band beam, which results in the highest satellite EIRP. As shown in this table, Expressway™ complies with the international Radio Regulations with more than a 16 dB margin.

Table 4.4.2.2-2. International Ku-Band Communications Power Flux Densities (12.2-12.75 GHz)

Maximum PFD Requirement (dBW/m^2/4 kHz)	Elevation Angle (degrees)	Slant Range (km)	Expressway™ Power Flux Density (dBW/m^2/4 kHz)	Margin (dB)
-148	0	41,680	-164.2	16.2
-148	5	41,128	-164.1	16.1
-138	25	39,072	-163.6	25.6
-138	90	35,787	-162.9	24.9

4.4.3. Ku-Band Telemetry

4.4.3.1. FCC Rules

Expressway™ telemetry will take place using an occupied bandwidth of approximately 1.50 MHz near the lower edge of a selected Ku-band. The maximum EIRP for the telemetry downlink as given in Appendix A of this application is 8.0 dBW. Using the same criteria as that for Ku-band communications given in Section 4.4.2.1 above, the maximum telemetry PFD in any 4 kHz band is given by the expression below and tabulated in Table 4.4.3.1-1.

$$\text{PFD (dBW/m}^2\text{/4 kHz)} = \text{Satellite EIRP (dBW)} - 20\log(\text{Slant Range}) - 71 - 10\log(1.5\text{ MHz}/4\text{ kHz})$$

As shown in this table, the PFD for Expressway™ telemetry complies with the Commission limits with at least 31 dB of margin for all elevation angles above the horizon.

Table 4.4.3.1-1. FCC Ku-Band Telemetry Power Flux Densities

Maximum PFD Requirement (dBW/m²/4 kHz)	Elevation Angle (degrees)	Slant Range (km)	Expressway™ Power Flux Density (dBW/m²/4 kHz)	Margin (dB)
-150	0	41,680	-181.1	31.1
-150	5	41,128	-181.0	31.0
-140	25	39,072	-180.6	40.6
-140	90	35,787	-179.8	39.8

4.4.3.2. International Requirements.

Using the same criteria used for Ku-band communications given in Section 4.4.2.2 above, Expressway™ telemetry compliance with international PFD limits was calculated and is given in Tables 4.4.3.2-1 and 4.4.3.2-2. As shown, Expressway™ telemetry complies with the international PFD limits with a margin of at least 31 dB for all elevation angles above the horizon.

Table 4.4.3.2-1. International Ku-Band Telemetry Power Flux Densities (10.7-11.7 GHz)

Maximum PFD Requirement (dBW/m²/4 kHz)	Elevation Angle (degrees)	Slant Range (km)	Expressway™ Power Flux Density (dBW/m²/4 kHz)	Margin (dB)
-150	0	41,680	-181.1	31.1
-150	5	41,128	-181.0	31.0
-140	25	39,072	-180.6	40.6
-140	90	35,787	-179.8	39.8

Table 4.4.3.2-2. International Ku-Band Telemetry Power Flux Densities (12.2-12.75 GHz)

Maximum PFD Requirement (dBW/m²/4 kHz)	Elevation Angle (degrees)	Slant Range (km)	Expressway™ Power Flux Density (dBW/m²/4 kHz)	Margin (dB)
-148	0	41,680	-181.1	33.1
-148	5	41,128	-181.0	31.0
-138	25	39,072	-180.6	42.6
-138	90	35,787	-179.8	41.8

4.4.4. Tracking Beacons

4.4.4.1 FCC Rules

Two unmodulated Ku-band tracking beacons will be used for satellite attitude control and antenna pointing and will be located near the lower edge of a selected Ku-band. Two beacons will also be provided near the lower edges of the V-band spectrum. The satellite beacons will have a maximum EIRP of 12 dBW. Table 4.4.4.1-1 provides the PFD levels for each of the Ku-band tracking beacons. The FCC has not specified limits for V- band.

Table 4.4.4.1-1. FCC Ku-Band Beacon Power Flux Densities

Maximum PFD Requirement (dBW/m²/4 kHz)	Elevation Angle (degrees)	Slant Range (km)	Expressway™ Power Flux Density (dBW/m²/4 kHz)	Margin (dB)
-150	0	41,680	-151.4	1.4
-150	5	41,128	-151.3	1.3
-140	25	39,072	-150.8	10.8
-140	90	35,787	-150.1	10.1

4.4.4.2. International Requirements.

Expressway™ beacon compliance with international PFD regulations is given in Tables 4.4.4.2-1 through 4.4.4.2-3.

Table 4.4.4.2-1. International V-Band Beacon Power Flux Densities

Maximum PFD Requirement (dBW/m²/MHz)	Elevation Angle (degrees)	Slant Range (km)	Expressway™ Power Flux Density (dBW/m²/MHz)	Margin (dB)
-115	0	41,680	-151.4	36.4
-115	5	41,128	-151.3	36.3
-105	25	39,072	-150.8	45.8
-105	90	35,787	-150.1	45.1

Table 4.4.4.2-2. International Ku-Band Beacon Power Flux Densities (10.7-11.7 GHz)

Maximum PFD Requirement (dBW/m²/4 kHz)	Elevation Angle (degrees)	Slant Range (km)	Expressway™ Power Flux Density (dBW/m²/4 kHz)	Margin (dB)
-150	0	41,680	-151.4	1.4
-150	5	41,128	-151.3	1.3
-140	25	39,072	-150.8	10.8
-140	90	35,787	-150.1	10.1

Table 4.4.4.2-3. International Ku-Band Beacon Power Flux Densities (12.2-12.75 GHz)

Maximum PFD Requirement (dBW/m²/4 kHz)	Elevation Angle (degrees)	Slant Range (km)	Expressway™ Power Flux Density (dBW/m²/4 kHz)	Margin (dB)
-148	0	41,680	-151.4	3.4
-148	5	41,128	-151.3	3.3
-138	25	39,072	-150.8	12.8
-138	90	35,787	-150.1	12.1

4.5. Space Segment

The Hughes high power satellite supports the power and antenna mounting area required for Expressway™. This satellite is a three-axis, body-stabilized satellite that uses a five panel solar array system, along with outboard radiator panels attached to the main body to dissipate heat generated from the high power TWTs. Table 4.5-1 gives satellite characteristics, and Figure 4.5.-1 is an illustration of the satellite.

Table 4.5-1. Expressway™ Satellite Characteristics

Satellite Bus	Hughes High Power Satellite
Mission Life	15 Years End-of-Life
Stabilization	3 Axis Earth Sensor and Beacon Tracking with the Use of Reaction Wheels and Thrusters
DC Power	17 kW Beginning-of-Life (5 Panel Design) 15 kW End-of-Life
Eclipse Capability	100%
Deployed Length	Approximately 144 Feet (5 Panel Design)
Approximate Weight	5500 kgs with Propellant 3500 kgs without Propellant
V-band Antennas	4 V-Band Reflectors 4 Feed Horn Packs
Ku-band Antennas	2 Ku-Band Reflectors 2 Feed Horns
Ku-band Antenna Opposite Hemisphere	10 Ku-Band Transmit/Receive Horn
T&C Antennas	2 Ku Transmit/Receive Bicones 4 Pipe Transmit/Receive Antennas
Beacon Tracking	CMD Planar Array and/or V-band Service Link
Number of V-Band FDM Carriers	400
Number of V-band Antenna Spots (Dual Polarization)	204
Number of Active, Dual Polarized Antenna Spots (Out of 204 Possible)	20
Number of Ku-Band FDM Carriers	20
Number of Ku-Band Area Coverage Spots (Dual Polarization)	9
Number of CMD Carriers	1
Number of TLM Carriers	1
Number of Tracking Beacons	V-band: 2 Receive, 2 Transmit Ku-Band: 2 Receive, 2 Transmit
Number of Laser Carriers	2 (Optical), 1 East/1 West
V-Band Spectrum Reuse	40 Times
Ku-Band Spectrum Reuse	10 Times
Station Keeping North-South East-West	 ± 0.05° ± 0.05°
Antenna Pointing Normal (Precision Two Axis RF Beacon Tracking)	± 0.03° N-S and E-W

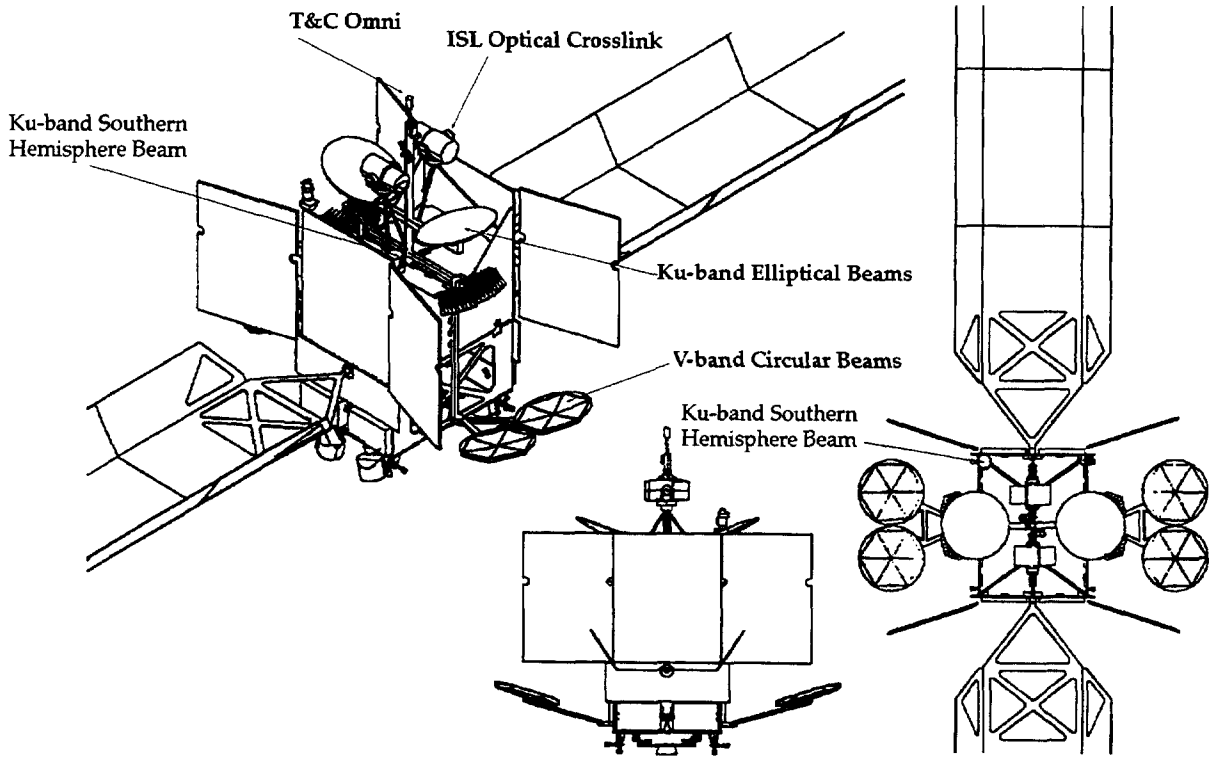

Figure 4.5-1 Hughes High Power Satellite

4.5.1. Communications Subsystem

The system will support primarily circuit switched communications ranging from fractional T1 rates (below 1.544 Mbps) to OC-3 (155.52 Mbps). Circuits can be symmetrical or asymmetrical and simplex or duplex. A V-band payload will support the majority of the satellite traffic and a Ku-band payload will be utilized for thin route traffic and for opposite (north-south) hemispherical coverage. Payload management and reconfiguration will be performed via Expressway™'s TT&C system operating in conjunction with the system's ground operations and control segment (Section 4.9). Table 4.5.1-1 provides communication parameters.

Table 4.5.1-1. Communication Parameters

Parameter Description	V-Band Payload	Ku-Band Payload	Crosslink Payload
Modulation Format	DQPSK	DQPSK	Intensity, Wavelength Multiplexed
Coding Scheme	Convolutional Concatenated Reed Solomon	Convolutional Concatenated Reed Solomon	Convolutional Concatenated Reed Solomon
Target Bit Error Rate	1×10^{-9}	1×10^{-9}	1×10^{-9}
Max Data Rates/FDM Channel	155 Mbps	155 Mbps	155 Mbps
FDM Channel Bandwidth	300 MHz	250 MHz	300 MHz
Uplink / Downlink / Crosslink Total Bandwidth	3 GHz	500 MHz	N/A

4.5.1.1. V-Band Subsystem

The V-band subsystem will utilize 3 GHz of spectrum (47.2 to 50.2 GHz) for uplink and 3 GHz of spectrum (39.5 to 42.5 GHz) for downlink. The V-band antenna subsystem will consist of multibeam feed horn arrays and reflectors. Appendix C contains V-band antenna coverage plots for satellites located at the requested orbit positions. Any satellite in the constellation can independently select a maximum of 20 regional spot beams, out of an array of 204 spot beam locations. Each spot has dual, circular polarization with 30 dB of cross-polarization isolation. Effectively, 40 beams are provided per satellite, each utilizing the full 3 GHz of spectrum for both reception and transmission. Figure 4.5.1.1-1 shows the V-band/Ku-band satellite payload block diagram. The V-band subsystem will be capable of routing V-band uplink traffic to the V-band downlink, Ku-band downlink, or laser crosslink via the on-board TDMA switch.

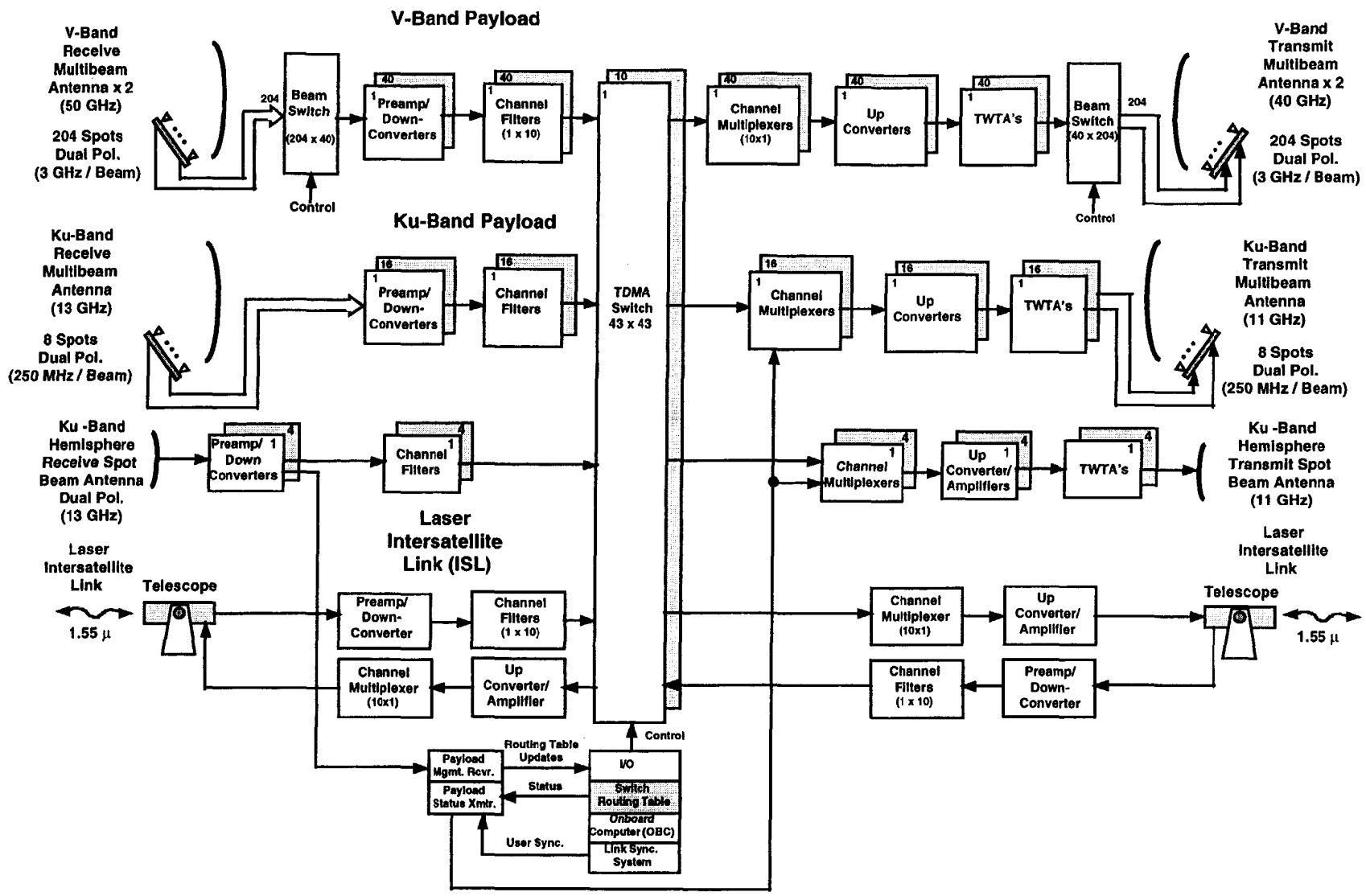

Figure 4.5.1.1-1. Satellite V/Ku Band Communications Payload Block Diagram (Ku-Band Frequencies are Illustrative)

User terminals will time-share FDM channels, with 100 TDM channels within each 300 MHz FDM channel. Each TDM channel will support a data rate of 1.544 Mbps and each FDM channel will support 155.52 Mbps, the equivalent of 100 T1 channels or one OC-3 channel. Thus, the system will provide a data throughput rate of 1.544 Gbps (100 x 1.544 Mbps x 10) for each of the 40 beams per satellite. Appendix A provides illustrative V-band link power budgets.

4.5.1.2. Ku-Band Subsystem

Ku-band coverage for the U.S. will be provided via six large oval shaped dual-polarized beams, with 30 dB of crosspolarization isolation. Appendix C provides Ku-band coverage plots. For coverage elsewhere in the world, eight beams will be used. An onboard Ku-band payload subsystem will use 250 MHz of bandwidth for each beam and is capable of supporting a single OC-3 service or 100 T1s. These beams will be used to provide thin route and high availability service. A separate Ku-band antenna will be used for coverage of the opposite (north-south) hemisphere. The Ku-band subsystem will be capable of routing Ku-band uplink traffic to the Ku-band downlink, V-band downlink, or ISL via the on-board TDMA switch.

4.5.2 TDMA Switch

Satellite switched TDMA is used to route uplink users to downlink users. The TDMA switch routes a particular TDM channel at a particular time in a particular FDM channel and uplink beam to an assigned downlink beam. The TDMA switch time gates uplink users to downlink users. Synchronization information is transmitted to all user ground terminals to synchronize

their transmission, reception, and demodulation equipment to the satellite TDMA switch. All user ground terminals will remain synchronized with one another so that satellite access can be made within the prescribed TDMA channel window of time.

The on-board TDMA switch is used to route all optical (laser) intersatellite, Ku-band, and V-band traffic.

4.6. Major Spacecraft Subsystems

4.6.1. Antennas

4.6.1.1. Uplink and Downlink Antennas

The Expressway™ antennas have been designed in conjunction with the communications and electrical power systems to provide maximum coverage performance within an efficient system package. The system consists of the following antennas:

- Two east-mounted parabolic reflectors; dual circularly polarized V-band transmit and receive antennas, each providing 102 of the 204 beams covering a 3° x 6° field of view.
- Two west-mounted parabolic reflectors; dual circularly polarized V-band transmit and receive antennas, each providing the other 102 of the 204 beams covering the 3° x 6° field of view.
- Two nadir-mounted parabolic reflectors; dual polarized Ku-band transmit and receive antennas, providing all eight of the elliptical (1° x 3°) beams.
- One nadir-mounted 6° steerable dual-polarized Ku-band transmit/receive horn providing opposite hemisphere beam coverage.
- Two nadir-mounted optical crosslink telescope assemblies, providing east and west crosslink beams.
- An omnidirectional antenna system consisting of two bicone and four pipe antennas providing TT&C services.

4.6.1.1.1 Ku-Band Antennas

The Ku-band elliptical beam coverage is provided by two nadir-mounted dual-gridded reflector antennas, each illuminated by eight feeds for the transmit and receive signals. The antenna system provides a total of eight dual-polarized, elliptically shaped beams for uplink and downlink services. Ku-band plots for Expressway™ satellites are given in Appendix C.

The Ku-band opposite (north-south) hemispherical coverage is provided by a single steerable horn diplexed for transmit and receive frequencies. The antenna provides one dual circularly polarized spot beam for uplink and downlink services.

4.6.1.1.2 V-Band Antennas

The V-band spot beam coverage is provided by two east-mounted and two west-mounted multifeed antenna assemblies. One of the east-mounted antennas will be used for reception and the other for transmission. The same is true for the west-mounted antennas. The offset parabolic reflectors are deployed from the east and west side of the satellite. The feed arrays are fixed to the nadir face and do not deploy. Each reflector is populated by a 102 horn, dual circularly polarized feed array with separate inputs and outputs for each polarization. Consequently there are 408 total input ports to the 204 horns that comprise the four antenna V-band assembly. A total of 40 of the possible 408 inputs are selected for operation at any given time by a beam switch. Appendix C contains plots for satellites at each orbital position.

4.6.1.2. TT&C Antenna

The telemetry and command omni antenna consists of two stacked bicone antennas and separate nadir and aft pipes. The bicone antennas provide toroidal radiation patterns and the pipe antennas, when used in conjunction with the bicones during transfer orbit, provide near 4π steradian coverage. On-orbit commanding is provided by the Ku-band planar array antenna, which is also used for beacon tracking.

4.6.1.3. Intersatellite Links

The optical intersatellite service is provided by two laser-telescope assemblies. One assembly is pointed to the east and the other to the west. The optical crosslink will operate in the 1.55 micron wavelength region.

4.6.2. Thermal Control Subsystem

The majority of the on-board power consumption is from the downlink high power TWT amplifiers. The Expressway™ high power satellite thermal design allows for customized heat dissipation with the use of heat pipes and radiator panels. The bus design has additional out-board radiator panels that also contain heat pipes and are extended beyond the normal body of the satellite for maximum thermal dissipation. The size of the out-board radiator panels is governed by the launch vehicle dimensions, satellite antennas, and amount of thermal dissipation required. Satellite blankets and electrical heaters are also used to manage temperatures. On-board temperature sensors feed information to the telemetry subsystem, which in turn, sends the information to the ground or the on-board Satellite Control Unit. With the use of the Satellite Control Processor,

temperature critical units can be maintained autonomously for up to 30 days without any input from the ground control facility.

4.6.3. Attitude Control Subsystem

4.6.3.1. Pointing

The Expressway™ high power satellite Attitude Control Subsystem (ACS) is capable of controlling the transfer orbit and on-station pointing with the following sensors: Sun Sensor, Earth Sensor Assembly (ESA), or with one to three RF beacons. Pointing accuracy is determined by the choice of pointing reference. An Expressway™ satellite has the capability to auto-track the satellite body and up to two reflectors when the ACS processes three individual beacons. Pointing control is accomplished with the use of Reaction Wheels and pulsed firing of selected thrusters. With the use of the on-board Spacecraft Control Processor (SCP), the pointing can be maintained for up to 30 days autonomously without any commands from ground facilities.

4.6.3.2. Reaction Wheels

One of three different reaction wheels can be selected depending on the momentum storage requirements of the spacecraft. The reaction wheel for Expressway™ will be sized accordingly and will support a five panel solar array, storage capability, and higher mass per wheel.

4.6.3.3. Sensor Suite Positioner

The Earth Sensor Assembly (ESA) bias in pitch-and-roll can be increased with the addition of a Sensor Suite Positioner (SSP).

4.6.4. Propulsion Subsystem

A liquid bipropellant propulsion subsystem is used during transfer orbit of an Expressway™ satellite. The liquid bipropellant subsystem is based on proven technology from previous programs. It uses hypergolic propellant: nitrogen-tetroxide (N_2O_4) oxidizer and monomethyl-hydrazine fuel. The Xenon Ion Propulsion System (XIPS) is used for control of the satellite orbit and attitude through the projected 15 year life.

4.6.5. Electrical Power Subsystem

An Expressway™ satellite is capable of supplying up to 15 KW for all of the on-board electronics. The fundamental components of the electrical subsystem include solar panels, batteries, and integrated power controllers. For the Expressway™ application, a combination of the following items has been selected: five panel system per solar array where two solar arrays are required, 60 cells for 328 Amp hour battery service, and an integrated power controller.

4.6.6. Telemetry, Tracking, and Command Subsystem

The telemetry, tracking, and command (TT&C) subsystem will use Ku-band links for transfer orbit and on-station control and monitoring. Either the transfer orbit or the on-station telemetry and command signals are active at any one time. The Ku-band TT&C system will also be used to control operations of the V-band and Ku-band communications payloads. Two downlink beacons will aid in ground system antenna pointing. Figure 4.6.6-1 shows the TT&C system block diagram.

The telemetry, tracking, and command summary is given in Table 4.6.6-1. The normal on-station command and telemetry paths are through the planar array. This array is also used by the satellite for tracking. The transfer orbit and backup on-station command and telemetry paths are through the omni antennas (pipes and bicones).

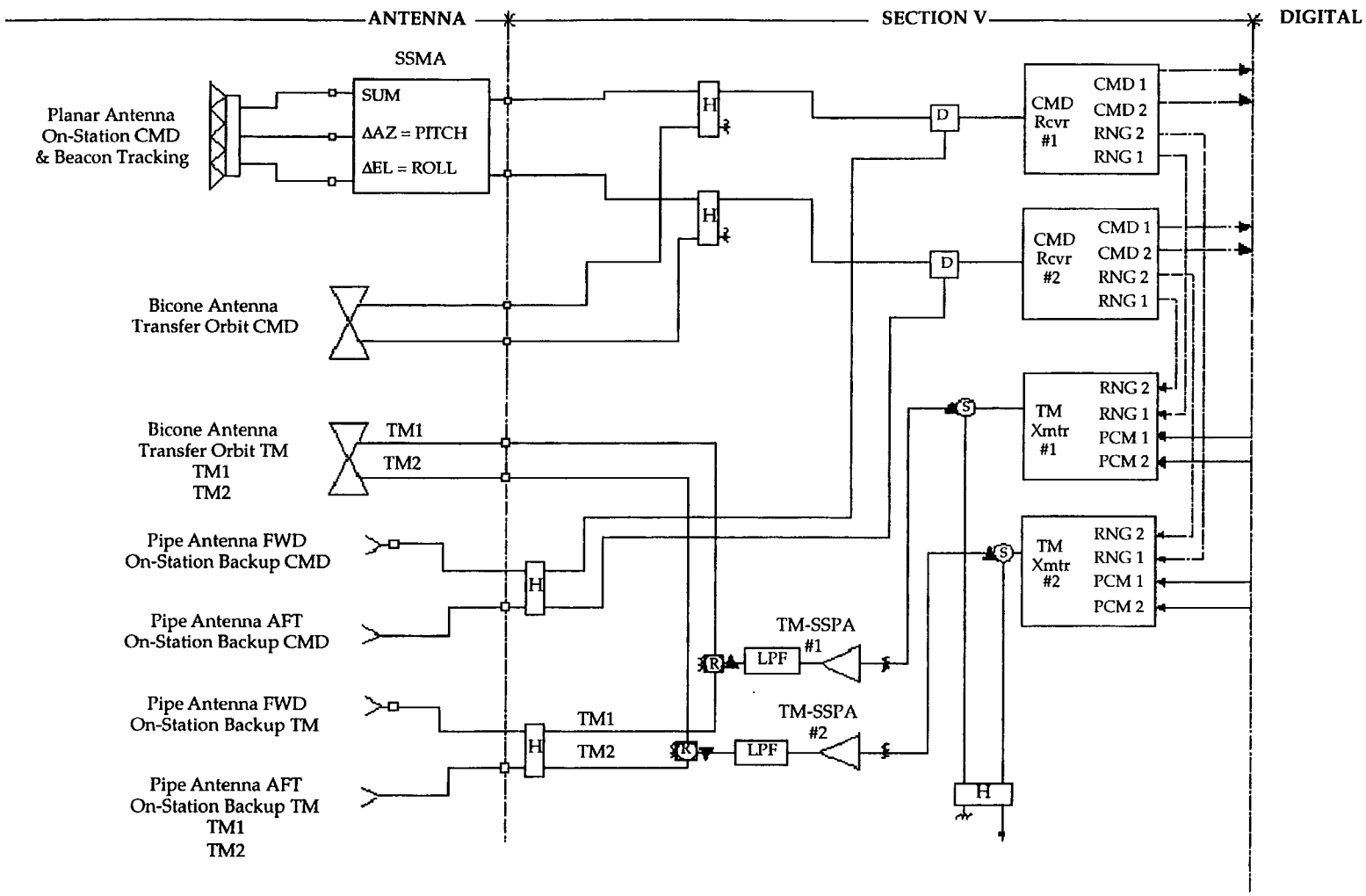

Figure 4.6.6-1. TT&C Subsystem Block Diagram

Table 4.6.6-1. T&C System Parameters (Illustrative Ku-Band Frequencies)

	Satellite Antenna	
Parameter	**Ku-Band Pipe**	**Ku-Band Planar Array**
Command Frequency	12.751 GHz	12.752 GHz
Command Data Rate	50 to 1000 BPS	50 to 1000 BPS
Command Data Encoding	FSK	FSK
Command Carrier Modulation	frequency, 300 kHz	frequency, 300 kHz
Command Carrier EIRP	86.5 dBW	86.5 dBW
Telemetry Frequency	10.701 & 10.702 GHz	10.701 & 10.702 GHz
Telemetry Data Rate	1000 /4000 BPS	1000 / 4000 BPS
Telemetry Data Encoding	BPSK	BPSK
Telemetry Subcarrier Frequency	32 kHz	32 kHz
Telemetry Modulation	phase, 1 radian	phase, 1 radian
Satellite Telemetry EIRP	0.0 dBW	8.0 dBW
Ranging Accuracy On-Station	30 meters	30 meters

The TT&C ground stations will use 7-meter Ku-band antennas to control and monitor the satellites. A number of additional ground antennas will be provided for redundancy and backup. The 7-meter antennas will be equipped with 90°K low noise amplifiers (LNA) which will provide a G/T of 34.0 dB/K. They will have 600 watt high power amplifiers (HPA) which will provide an effective isotropic radiated power (EIRP) of 86.5 dBW.

The satellite command receive system noise temperature will be 900°K, and the satellite transmit power for telemetry will be 8 dBW. The satellite command receiver requires an input power of -135 dBW for command execution. With a nominal ground station EIRP of 86.5 dBW, the command threshold requirements are met through the planar array and omni antennas. See Appendix A for the on-station command and telemetry link budgets.

4.6.6.1. Telemetry

The telemetry subsystem will have two identical links consisting of two encoders that modulate either of two transmitters via a cross-strap switch. Data

pertaining to unit status, satellite attitude, and satellite performance will be transmitted continuously for satellite management and control. The telemetry transmitter will also serve as the downlink transmitter for ranging tones and command verification. The telemetry data mode will be PCM. For normal on-station operation, the telemetry transmitters will be connected via a filter to the transmit feeds of the Ku-band communications antennas.

In transfer orbit, each telemetry transmitter will drive one of two Ku-band communication TWTAs selected to provide adequate EIRP for telemetry coverage via a bicone or pipe antenna. Selection of this mode, which is also used for emergency backup to normal on station operation, will be by ground command or SCP fault logic.

4.6.6.2. Command

The command subsystem will control satellite operation through all phases of the mission by receiving and decoding commands to the spacecraft. Additionally, it will enable the uplink receiver to process ranging signals and provide closed loop tracking of the command uplink for satellite antenna pointing. It will perform the function without interfering with the command function. The command uplink will employ government-approved command encryption. The command signals will be fed through a filter diplexer into a redundant pair of track command receivers. The composite signal of the receivers' total output will drive a pair of redundant decoders. The decoders will provide command outputs for all satellite functions.

The planar array will be used on-station for command and ranging and for satellite tracking of the command uplink. The command omni antenna will be used for command and ranging in transfer orbit and for emergency backup on-station.

4.6.6.3. Tracking Beacons

Beacon tracking will also be provided at both Ku-band and V-band. The beacons will enhance satellite attitude control and pointing and will be tracked on the ground by two tracking stations. A monopulse technique will be used. Tracking beacon frequencies will be located at the lower edges of the communications bands. There will be two transmit and two receive beacons (one per polarization) at Ku-band and two transmit and two receive beacons (one per polarization) at V-band.

4.6.7. Intersatellite Links

Intersatellite links (ISL) will offer greater flexibility and connectivity to the Expressway™ system and be used to interconnect satellites providing service to a particular region as well as to provide globally interconnected service. A laser communication subsystem will be used to provide all ISLs. Selected outputs of the on-board TDMA switch will be routed to the laser payload, where the data will be frequency converted and multiplexed to provide a maximum 3 Gbps data rate for intersatellite connectivity. The laser communication system will operate at a wavelength in the 1.55 micron region.