ACCESS SERVICE

		Page No.	
8.	Multi-service Optical Network (MON) Ring Service	8-1	(N)
8.1	General Description	8-2	
	(A) Basic Service Description	8-2	
	(B) Service Provisioning	8-3	
	(C) Responsibility of The Telephone Company	8-6	
	(D) Responsibility of Customer	8-6	
	(E) Service Rearrangements	8-6	
8.2	Route Diversity	8-7	
8.3	Rate Regulations	8-7	
	(A) Rate Elements	8-7	
	(B) MON Ring Connection Capacity	8-9	
	(C) Term Pricing Plan	8-12	
8.4	Rates and Charges	8-14	
	(A) Nonrecurring Charges	8-14	
	(B) Recurring Charges	8-15	
	(C) Ports	8-16	(N)

(This page filed under Transmittal No. 35)

8. Multi-service Optical Network (MON) Ring Service (Cont'd)

8.1 General Description

(A) Basic Service Description

Multi-service Optical Network (MON) Ring Service is a Special Access Service that provides high volume optical transport utilizing multiplexing technology in a dedicated ring configuration. Multiple data signals are transmitted over the same fiber-optic cable at the same time, using different wavelengths of light, in order to increase the amount of information that can be transferred. Each wavelength represents a transmission channel in the MON Ring system and is protocol independent of every other channel in the system.

Rates and charges for Multi-service Optical Network (MON) Service are set forth in Section 8.4 following, with the exception of the services provided by the Telephone Company in the Metropolitan Statistical Areas (MSAs) in which the Telephone Company has received Phase II pricing flexibility pursuant to Subpart H of Part 69 of the Commission's Rules. The rates and charges for the Multi-service Optical Network (MON) Service in the MSAs that have received Phase II pricing flexibility are set forth in Section 22. (N) (N)

MON Ring Service allows customers to combine their multiple data signals so they may be amplified and transported over one network. MON Ring Service provides dedicated capacity over a single pair of fiber in two directions that increases capacity without limiting customer-required data interfaces.

The following regulations will apply to MON Ring Service:

(1) MON Ring Service is only available under a three (3) or five (5) year Term Payment Plan (TPP) for which rates and charges are applicable. When a service is discontinued prior to the expiration of the minimum period, termination charges are applicable for the remaining portion of the minimum period.

(2) Prior to confirming an order for service, the Telephone Company will provide a proposed route diagram to the customer. Installation will not begin until the customer has accepted the proposed routing by the Telephone Company.

8. Multi-service Optical Network (MON) Ring Service (Cont'd)

8.1 General Description (Cont'd)

(B) Service Provisioning

(1) Manner of Provisioning

MON Ring Service will be offered in two configurations. Customers can purchase MON Ring with growth capacity up to 16-wavelengths or up to 32-wavelengths. The 32-wavelength systems may be provisioned as two 16-wavelength systems sharing common fiber and common equipment. Conversions from 16-wavelength MON Rings to 32–wavelength MON Rings are not available.

Customer provided equipment(CPE) must deliver the data signals for the MON Ring Service transport within the technical specifications for the subscribed data service.
Technical specifications can be found in the following Technical Reference Publications:

AM TR-NIS-000100, Ameritech LAN Interconnect Service-Token Ring Interface Specifications
AM TR-NIS-000104, Ameritech LAN Interconnect Service –CSMA CD Interface Specifications
AM-TR-NIS-000111, Ameritech OC-3, OC-12, and OC-48 Service Interface Specifications
AM-TR-TMO-000101, Ameritech Digital Service Transmission Parameters
AM-TR-TMO-000080, Ameritech Service's Network Channel and Network Channel Interface Codes
AM-TR-NIS-000096, Ameritech Technical Interfaces Specifications
AM-TR-NIS-000107, (ESCON™)
IBM SA22-7202-XX, IBM Documentation (ESCON™)
IBM SA22-0394-XX
ANSI X3.T9.3, Fibre Channel (also includes FICON™ and ISC™)
ANSI/IEEE 802.3, Fast Ethernet
IEEE 802.3x and z, Gigabit Ethernet
IEEE 802.3ae
ANSI/SMPTE 259M, D1 Video (D)

(D)

The customer must first order the MON Ring Transport System followed by the MON Ring Channels. When ordering ESCON™, Fast Ethernet, D1 Video and OC-3/OC-3c ports, the customer must first order a MON Ring Channel Sub-Rate System over which these services will be assigned. Subsequent changes to the initial provisioning of the service may require additional optical amplifiers and/or regenerators.

OC-12/OC-12c, Gigabit Ethernet, Fibre Channel and FICON™ ports at the 1.0625 Gbps speed may be ordered either on the MON Ring, or as a riding circuit on a Sub-Rate System. Fibre Channel and FICON™ ports at the 2.125 Gbps speed may only be ordered on the MON Ring, and are not available on a Sub-Rate System. (N)

Material previously appearing on this page now appears on Original Page 8-3.1.

/1/ ESCON™, ETR™, FICON™, ISC™ and GDPS™ are registered trademarks of the International Business Machines (IBM) Corporation, Armonk, NY 10504

(This page filed under Transmittal No. 65)

8. Multi-service Optical Network (MON) Ring Service (Cont'd)

8.1 General Description (Cont'd)

(B) Service Provisioning

(1) Manner of Provisioning (Cont'd) (M)

MON Ring Service provides physical layer transport only. Telephone Company assumes no responsibility for the signals generated by the CPE, or address signaling to the extent the CPE performs addressing. Error detection and correction of data generated by the CPE are the customer's responsibility. (M)

Material appearing on this page previously appeared on Original Page 8-3.

(This page filed under Transmittal No. 65)

8. Multi-service Optical Network (MON) Ring Service (Cont'd) (N)

8.1 General Description (Cont'd)

(B) Service Provisioning (Cont'd)

(2) Limitations

(a) Optical amplifiers and/or regenerators may have to be added to a MON Ring Service subsequent to the initial installation.
(b) When any additional services are added, such installations may cause a service interruption to existing unprotected channels, or a protection switch on protected channels.
(c) Services with time-delay sensitive protocols have facility length limitations and may affect the design/availability of MON Ring Service. The Telephone Company will work cooperatively with the customer to determine if the desired services can operate between the customers designated premises. These services will not be available on MON Rings nor between nodes where facility length limitations exceed the service specifications described in Sections 8.3(B)(1)&(2).
(d) Neither electrical interfaces nor optical multiplexing are available with MON Ring Service.
(e) Conversions from any other lower speed services to MON Ring Service are not available.
(f) Channel protection may not be available for all interface types.
(g) A protective channel provides protection for a single channel toward the network. It does not protect the channel against failure towards the customer interface. Protection reduces the maximum individual channel capacity of the system.

(3) Allowance for Service Interruptions

An interruption of service will start when an inoperative service is reported to the Telephone Company and end when the service is operative. In any month, as a result of an interruption, the total credit per rate element of the interrupted service may not exceed 100 percent of the monthly charge for that particular rate element as described in Section 2.4.4.

Any protected service interruptions greater than 2 consecutive seconds as a result of a failure on the protected portion of the circuit will result in a credit equal to one month's bill for the individual port-to-port connection involved. If the interruption occurs on an unprotected portion of the circuit, normal terms and conditions for credit allowances will apply as stated in 2.4.4. (N)

(This page filed under Transmittal No. 35)

ACCESS SERVICE

8. Multi-service Optical Network (MON) Ring Service (Cont'd) (N)

8.1 General Description (Cont'd)

(B) Service Provisioning (Cont'd)

(4) MON Ring Configuration

MON Ring Service is available in different ring configurations utilizing central office nodes and customer premises nodes, with a maximum of eight sites and forty shelves. Each shelf supports 8 non-protected or 4 [protected services. Its functionality includes supporting the add/drop multiplexing, regeneration and amplification cards.

The minimum configuration would be two nodes at either a serving wire center or a customer premises site. If the nodes are not in a serving wire center, a central office management site for monitoring is required. An optical amplifier located at a serving wire center can be used as a monitoring site.

A combination of these configurations may be used in a network design depending on the customer's traffic pattern.

Diagram of Mon Ring

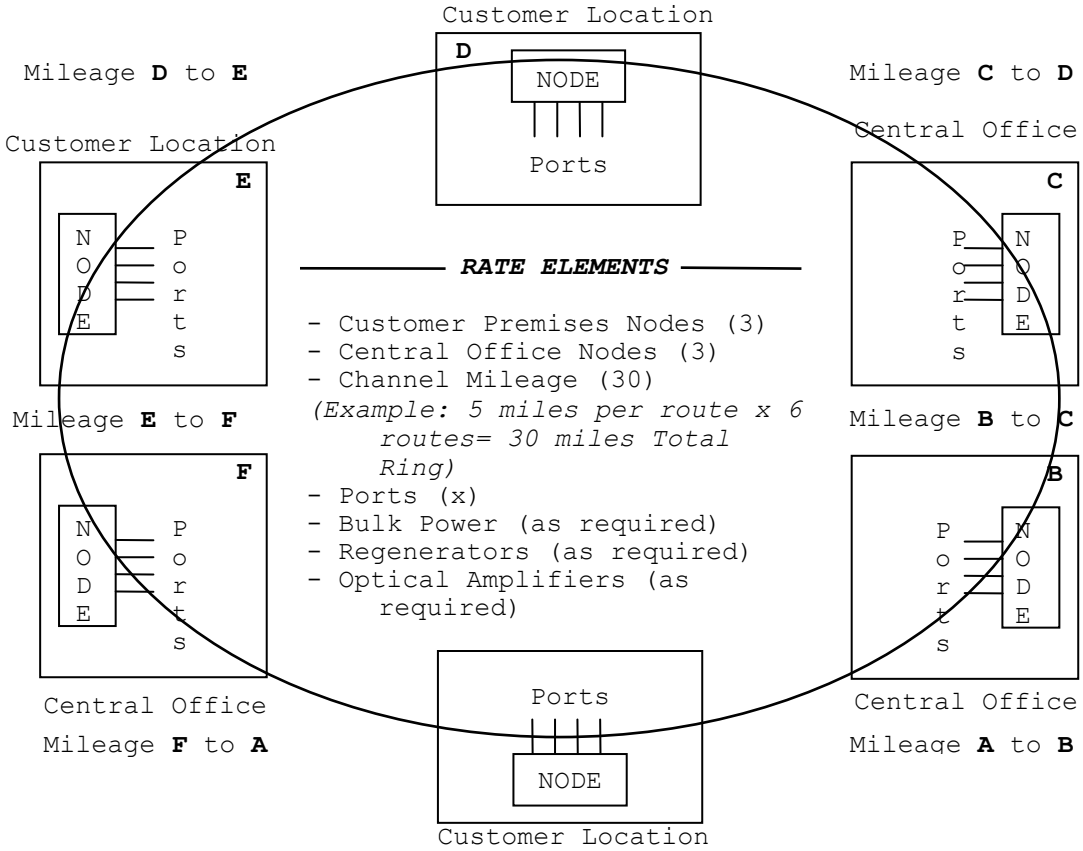

(N)

(This page filed under Transmittal No. 35)

8. Multi-service Optical Network (MON) Ring Service (Cont'd) (N)

8.1 General Description (Cont'd)

(C) Responsibility of The Telephone Company

The Telephone Company will provision and maintain MON Ring Service for the customer up to and including the Network Interface (NI).

(D) Responsibility of Customer

The customer is responsible for providing the compatible CPE to be used for the connection to the MON Ring Service.

(E) Service Rearrangements

Service rearrangements are provisioning changes to existing (installed) services which do not result in either a change in the minimum period requirements or a change in the physical location of the point of termination at a customer premises, and will be charged as follows:

(1) If changing the customer of record, the Administrative Charge will apply. For the changes of customer of record to be treated as a service rearrangement, the new customer must assume liability for both current and prior charges for the service.

(2) For all other changes not requiring physical work at the central office, or customer premises, including a change in the customer assigned circuit identification or billing account number (when initiated by the customer), the Administrative Charge will apply.

(3) For all other service rearrangements requiring physical work to be performed, the Administrative Charge will apply. Additionally, one Design and Central Office Connection Charge and one Customer Connection Charge per customer premises node will apply. (N)

8. Multi-service Optical Network (MON) Ring Service (Cont'd) (N)

8.2 Route Diversity

MON Ring Service is configured with diversely routed fiber whenever possible. Unprotected channels will be lost in the event of a fiber path failure on which the circuit is assigned. Equipment interfaces towards the customer are not protected.

Routing of fiber may be diversified from the customer premises to their serving wire center or alternate serving wire center as determined by the Telephone Company, and where facilities are available, to ensure that loop fibers follow separate paths to the serving wire center or alternate serving wire center. In addition, IOF (interoffice facility) fiber paths may be diversified to ensure that at any serving wire center drop node, the fibers do not egress and ingress at the same location. In cases, where the serving wire center does not have multiple entrance fiber facilities, the section of the fiber from the manhole closest to the serving wire center will be routed within the same duct structure.

At the customer's request, additional protection to the customer premises nodes can be provided via dual entrance facilities. This special request will cause the customer to incur special construction cost. Without this special request, diverse fiber is provided to the manhole closest to the customer premises. The customer or building owner is responsible for providing the conduit.

In the case where dual entrance facilities are not established at the customer premises, collapsed facilities from the customer premises to the building equipment location are not diverse.

8.3 Rate Regulations

(A) Rate Elements

There are eight basic rate elements which apply to the MON Ring Service:

(1) Nonrecurring Charges

These are one-time charges that apply for specific work activities (i.e., installation of new service, moves, and rearrangements of installed services). There are three different nonrecurring charges:

(a) Administrative Charge - applies any time a customer initiates an order for service. This charge applies once per customer order.
(b) Design and Central Office Connection Charge - applies once for the initial MON Ring installation, and applies once for each circuit ordered on the MON Ring Service.
(c) Customer Connection Charge – applies to establish the MON Ring network, and is charged per node. Subsequent installation charges apply to each subsequent shelf installed after the MON Ring network is established. (N)

8. Multi-service Optical Network (MON) Ring Service (Cont'd) (N)

8.3 Rate Regulations (Cont'd)

(A) Rate Elements (Cont'd)

(2) Customer Premises Node

Provides for the termination of service at the customer's premises and presents the various selected ports to the customer. Applies per customer designated premises, per first shelf and subsequent shelves.

(3) Central Office Node

Provides for the termination of service at a Telephone Company serving wire center. Applies per first shelf and subsequent shelves.

(4) Channel Mileage

Provides for the transmission facilities between the serving wire centers associated with the customer designated premises. The mileage measurement is developed utilizing the V&H coordinate method as set forth in the National Exchange Carrier Association, Inc. (NECA) Wire Center Information Tariff, F.C.C. No. 4. A one-mile minimum will be billed between nodes. A two-node ring configuration has a two mile minimum, one mile from the central office node to the customer premises node, and one mile from the customer premises node to the central office node.

(5) Optical Amplifier

Provides for an optical signal boost and applies when the distance between nodes exceeds the transmission loss parameters (link loss specific). Optical amplifiers are located at the customer premises node, a central office node, or a serving wire center. Each amplifier provides amplification for up to 16 channels per location (one amplifier per C or L band).

(6) Regenerator

Provides for re-timing, re-shaping, and regeneration when the degradation of the signal exceeds the dispersion and/or optical amplifier noise limits. Applies on a per shelf basis for up to 2.5 Gbps services and on a per circuit basis for up to 10 Gbps service.

(7) Bulk Power

Provides for customer premises node power, which will be required if the customer's power source is AC. Applies once per 4 shelves, with the first shelf and fifth subsequent shelf at each applicable customer premises node. (N)

8. Multi-service Optical Network (MON) Ring Service (Cont'd) (N)

8.3 Rate Regulations (Cont'd)

(A) Rate Elements (Cont'd)

(8) Port

Provides for the channel interface at any node location for each unprotected or protected channel. Applies per port/per circuit terminating location. Charges will apply at the lower speed circuit level.

(B) MON Ring Connection Capacity

MON Ring Service offers the following port interfaces:

(1) IBM Protocols:

ESCON™/1/ (200 Mbps) – Enterprise Systems Connection. An IBM duplex optical connection used for computer-to-computer data exchange. ESCON™ is limited to a maximum distance of 43 km and actual data throughput is distance sensitive.

ETR™/1/ (8 Mbps – Manchester Encoded) – External Timing references. This protocol is used for IBM GDPS™ architecture for multiple-location host processors. ETR™ is limited to a maximum distance of 40 km.

FICON™/1/ (1.0625 and 2.125 Gbps) – A higher-speed evolution of ESCON™, enabling 1 Gbps connectivity among mainframes, storage devices and peripherals. FICON™ is limited to a maximum distance of 100 km and actual data throughput is distance sensitive.

ISC™/1/ (1.0625 Gbps) – Inter-System Coupling. This protocol is used with IBM GDPS™ architecture for multiple-location host processors. ISC™ is limited to a maximum distance of 40 km. (N)

/1/ESCON™, ETR™, FICON™, ISC™ and GDPS™ are registered trademarks of the International Business Machines (IBM) Corporation, Armonk, NY 10504 (N) (N)

8. Multi-service Optical Network (MON) Ring Service (Cont'd)

8.3 Rate Regulations (Cont'd)

(B) MON Ring Connection Capacity (Cont'd)

(2) Other Protocols:

Fibre Channel (1.0625 and 2.125 Gbps) – an industry standard protocol used to interconnect Storage Area Networks (SANs). Fibre Channel is limited to a maximum distance of 100 km and actual throughput is distance sensitive.

Fast Ethernet – a version of Ethernet that allows data transmission rates of 100 Mbps.

Gigabit Ethernet – a version of Ethernet that allows data transmission rates of 1 Gbps.

10 Gigabit Ethernet (WAN-PHY) – a version of Ethernet that allows data transmission rates of 9.953 Gbps with a WAN-PHY only interface. (T)

10 Gigabit Ethernet (LAN-PHY))- a version of Ethernet that allows data transmission rates of 10.3125 Gbps with a LAN-PHY only interface. (N) (N) (N)

D1 Video – uncompressed digital video signal operating at 270 Mbps.

GigE/FC/ FICON™ Sub-Rate System (2:1) - provides a multiplexing system which allows customers to put 2 Gigabit Ethernet (GigE) Channels, 2 Fibre Channels or 2 FICON™ Channels on one port card. (N)

ESCON™ Sub-Rate System (8:1)- provides a multiplexing system which allows customers to put up to 8 ESCON™ Channels (no other protocol) on one port card.

OC-3/OC-12 Sub-Rate System (4:1)– provides a multiplexing system which allows customers to put up to 4 OC-3/OC-3c signals or combinations thereof on one card. This sub-rate multiplexing system will have independent timing which allows multiple OC-3/OC-3c services and/or OC-12/OC-12c services on one Sub-Rate card. (N)

(This page filed under Transmittal No. 65)

8. Multi-service Optical Network (MON) Ring Service (Cont'd) (N)

8.3 Rate Regulations (Cont'd)

(B) MON Ring Connection Capacity (Cont'd)

(2) Other Protocols: (Cont'd)

SONET OC-3/OC-3c* - provides a fiber-based 155.52 Mbps synchronous optical full duplex data transmission capability.

SONET OC-12/OC-12c* - provides a fiber-based 622.08 Mbps synchronous optical full duplex data transmission capability.

SONET OC-48/OC-48c* - provides a fiber-based 2488.32 Mbps synchronous optical full duplex data transmission capability.

SONET OC-192* - provides a fiber-based 9953.28 Mbps synchronous optical full duplex data transmission capability.

Sub-Rate System* - provides a multiplexing system operating at 1.25 Gbps with 4 ports. Applicable to OC3 port interfaces.

Sub-Rate System - provides a multiplexing system operating at 1.25 Gbps with 4 ports. Applicable to ESCON™, Fast Ethernet, and D1 Video port interfaces. (N)

* These port interfaces are available at both the customer premises node and (N)
the central office node. All other port interfaces are available only at the (N)
customer premises node. (N)

(This page filed under Transmittal No. 35)

8. Multi-service Optical Network (MON) Ring Service (Cont'd) (N)

8.3 Rate Regulations (Cont'd)

(C) Term Pricing Plan

(1) General Description

MON Ring Service Term Pricing Plan (TPP) provides the customer with discounted tariff rates for a three or five year term period. During the length of the selected TPP, monthly rates for service ordered under the plan will automatically change (increase or decrease), as Telephone Company initiated rate changes become effective. However, under no circumstances will any rate change cause the monthly rate for the service to exceed the rate that was in effect at the beginning of the selected TPP. The Telephone Company will notify customers participating in a TPP when monthly rates are increased or decreased. When customer's term agreement expires, if customer does not subscribe to a new service or choose to disconnect service, the customer's service will automatically convert to monthly extension rates.

(2) TPP Renegotiations

The customer may choose to terminate an existing TPP at any time prior to the end of the three or five year term period and renegotiate a new TPP without termination liability provided the new TPP meets the following requirements:

(a) The minimum period for the new TPP must be equal to or of greater duration than the remaining period of the existing TPP.

(b) The renegotiated TPP will be based on the current rates.

(3) Additions

Any MON Ring rate elements (as shown in Section 8.4) added to the existing service configuration after the expiration of 25 months of a 36 month TPP term, or 42 months of a 60-month TPP term, will be billed under the tariffed monthly extension rates. (N)

8. Multi-service Optical Network (MON) Ring Service (Cont'd) (N)

8.3 Rate Regulations (Cont'd)

(C) Term Pricing Plan (Cont'd)

(4) Termination of Service

Customer requesting termination of service prior to the expiration date of the TPP for any reason will be liable for a termination charge, which is calculated as follows:

Billing Period	Termination Percentage
3 Year	75%
5 Year	60%

(Monthly Recurring Rates) **X** (Months Remaining in Billing) **X** (Termination Percentage)

Example:

A MON Ring Customer with $50,000 monthly rate terminates service after 2 years with 1 year (12 months) remaining in a 3 year TPP. The termination liability would be calculated as:

$50,000 X 12 X .75 = $450,000.00

(5) Moves

If during the duration of the TPP, the customer wishes to rearrange or move a customer premises node, a termination charge will apply. (N)

8. Multi-service Optical Network (MON) Ring Service (Cont'd) (N)

8.4 Rates and Charges

(A) Nonrecurring Charges

	USOC	Nonrecurring Charge
(1) Administrative Charge - per customer order	ORCMX	$125.00
(2) Design and Central Office Connection Charge - per network and per riding circuit	NRMCK	600.00
(3) Customer Connection Charge (Service Establishment) - per node	NRBBL	7,500.00
(4) Customer Connection Charge (Subsequent Installation) - per subsequent shelf	NHCNL	1,000.00

(N)

(This page filed under Transmittal No. 35)

8. Multi-service Optical Network (MON) Ring Service (Cont'd) (N)

8.4 Rates and Charges (Cont'd)

(B) Recurring Charges

	USOC	Monthly Rates 3 Year	Monthly Rates 5 Year	Monthly Extension
(1) Customer Premises Node (includes first shelf)	F2ND1	$12,000.00	$9,600.00	$16,800.00
(2) Customer Premises Node - per subsequent shelf	F2NDS	9,000.00	7,200.00	12,600.00
(3) Central Office Node (includes first shelf)	F2NC1	12,000.00	9,600.00	16,800.00
(4) Central Office Node - per subsequent shelf	F2NCS	9,000.00	7,200.00	12,600.00
(5) Channel Mileage - per V-H mile or fraction thereof (2 mile min.)	IYAZX	500.00	400.00	700.00
(6) Optical Amplifier				
- C band (per location)	67QXX	5,400.00	3,600.00	7,600.00
- L band (per location)	67QSX	5,400.00	3,600.00	7,600.00
(7) Regenerator – (as required)				
-up to 2.5 Gbps (per shelf)	V8RXX	7,500.00	5,000.00	10,500.00
-up to 10 Gbps (per circuit)	V8R2C	15,000.00	10,000.00	21,000.00
(8) Bulk Power -per first shelf, for shelves 1 thru 4	CBVDX	2,000.00	1,600.00	2,600.00
(9) Bulk Power -per fifth subsequent shelf for shelves 5 thru 8	CBVDS	1,600.00	1,300.00	2,100.00

(N)

(This page filed under Transmittal No. 35)

8. Multi-service Optical Network (MON) Ring Service (Cont'd) (N)

8.4 Rates and Charges (Cont'd)

(C) Ports

-per port/per circuit terminating location

	USOC	Monthly Rates 3 Year	Monthly Rates 5 Year	Monthly Extension
(1) ETR™/1/				
- unprotected channel	POYKW	$975.00	$750.00	$1,400.00
(2) FICON™/1/ (1.0625 Gbps)				
- unprotected channel	POYMW	975.00	750.00	1,400.00
- protected channel	POYMP	1,950.00	1,500.00	2,800.00
(3) FICON™/1/ (2.125 Gbps)				
- unprotected channel	POYWW	1,700.00	1,300.00	2,400.00
- protected channel	POYWP	3,400.00	2,600.00	4,800.00
(4) ISC™/1/				
- unprotected channel	POYJW	3,250.00	1,250.00	4,600.00
(5) Fibre Channel (1.0625 Gbps)				
- unprotected channel	POYNW	1,200.00	900.00	1,700.00
- protected channel	POYNP	2,400.00	1,800.00	3,400.00 (N)

/1/ ESCON™, ETR™, FICON™, ISC™ and GDPS™ are registered trademarks of the International Business Machines (IBM) Corporation, Armonk, NY 10504 (N) (N)

8. Multi-service Optical Network (MON) Ring Service (Cont'd)

8.4 Rates and Charges (Cont'd)

(C) Ports (Cont'd)

-per port/per circuit terminating location

	USOC	Monthly Rates 3 Year	Monthly Rates 5 Year	Monthly Extension	
(6) Fibre Channel (2.125 Gbps)					
-unprotected channel	POYYW	$1,700.00	$1,300.00	$2,400.00	
-protected channel	POYYP	3,400.00	2,600.00	4,800.00	
(7) Gigabit Ethernet					
- unprotected channel	POYLW	1,200.00	900.00	1,700.00	
- protected channel	POYLP	2,400.00	1,800.00	3,400.00	
(8) 10 Gigabit Ethernet (WAN-PHY)					
- unprotected channel	POYTW	15,000.00	12,500.00	21,000.00	
- protected channel	POYTP	20,000.00	16,700.00	28,000.00	
(9) 10 Gigabit Ethernet (LAN-PHY)					(N)
- unprotected channel	POYUW	15,375.00	12,815.00	21,525.00	
- protected channel	POYUP	20,500.00	17,120.00	28,700.00	(N)
(10) SONET OC-12/OC-12c					(T)
- unprotected channel	POYFW	1,300.00	1,000.00	1,900.00	
- protect channel	POYFP	2,600.00	2,000.00	3,700.00	
(11) SONET OC-48/48c					(T)
- unprotected channel	POYGW	4,400.00	3,700.00	6,000.00	
- protected channel	POYGP	6,600.00	5,560.00	9,000.00	
(12) SONET OC-192					(T)
- unprotected channel	POYOW	15,000.00	12,500.00	21,000.00	
- protected channel	POYOP	20,000.00	16,700.00	28,000.00	

(This page filed under Transmittal No. 65)

8. Multi-service Optical Network (MON) Ring Service (Cont'd)

8.4 Rates and Charges (Cont'd)

(C) Ports (Cont'd)

-per port/per circuit terminating location

	USOC	Monthly Rates 3 Year	Monthly Rates 5 Year	Monthly Extension	
(13) Sub-Rate System					(T)
- unprotected channel	POYSW	$1,300.00	$1,000.00	$1,900.00	
- protected channel	POYSP	2,600.00	2,000.00	3,700.00	
(14) ESCON™/1/*					(T)
- unprotected channel	POYHW	100.00	100.00	150.00	
- protected channel	POYHP	100.00	100.00	150.00	
(15) Fast Ethernet*					(T)
- unprotected channel	POYCW	325.00	250.00	500.00	
- protected channel	POYCP	500.00	400.00	800.00	
(16) D1 Video*					(T)
- unprotected channel	POYVW	100.00	100.00	150.00	
- protected channel	POYVP	100.00	100.00	150.00	
(17) SONET OC-3/OC-3c**					(C)
- unprotected channel	POYEW	100.00	100.00	150.00	
- protected channel	POYEP	100.00	100.00	150.00	

/1/ ESCON™, ETR™, FICON™, ISC™ and GDPS™ are registered trademarks of the International Business Machines (IBM) Corporation, Armonk, NY 10504

*Available only when ordered with Sub-Rate System or ESCON™ Sub-Rate System. (N)
**Available only when ordered with Sub-Rate System or OC-3/OC-12 Sub-Rate System. (N) (N)

8. Multi-service Optical Network (MON) Ring Service (Cont'd) (N)

8.4 Rates and Charges (Cont'd)

(C) Ports (Cont'd)

-per port/per circuit terminating location

	USOC	Monthly Rates 3 Year	Monthly Rates 5 Year	Monthly Extension
(18) GigE/FC/FICON™/1/Sub-Rate System				
- unprotected channel	POY1W	875.00	700.00	1,140.00
- protected channel	POY1P	1,750.00	1,400.00	2,280.00
(19) GigE Riding Circuit*				
- unprotected channel	POY4W	500.00	400.00	650.00
- protected channel	POY4P	1,000.00	800.00	1,300.00
(20) Fibre Channel Riding Circuit*				
- unprotected channel	POY6W	500.00	400.00	650.00
- protected channel	POY6P	1,000.00	800.00	1,300.00
(21) FICON™/1/ Riding Circuit*				
- unprotected channel	POY7W	400.00	320.00	480.00
- protected channel	POY7P	800.00	640.00	960.00
(22) ESCON™/1/ Sub-Rate System				
- unprotected channel	POY2W	1,500.00	1,125.00	1,950.00
- protected channel	POY2P	3,000.00	2,250.00	3,900.00
(23) OC-3/OC-12 Sub-Rate System				
- unprotected channel	POY3W	1,000.00	750.00	1,300.00
- protected channel	POY3P	2,000.00	1,500.00	2,600.00
(24) OC-12 Riding Circuit**				
- unprotected channel	POY5W	500.00	375.00	700.00
- protected channel	POY5P	1,000.00	750.00	1,400.00

/1/ ESCON™, ETR™, FICON™, ISC™ and GDPS™ are registered trademarks of the International Business Machines (IBM) Corporation, Armonk, NY 10504

*Available only when ordered with GigE/FC/FICON™/1/ Sub-Rate System.
** Available only when ordered with Sub-Rate System or OC-3/OC-12 Sub-Rate System. (N)

ACCESS SERVICE

	Page No.	
9. DIRECTORY ASSISTANCE SERVICE	9-2	
9.1 General Description	9-2	
9.2 Undertaking of the Telephone Company	9-2	
9.3 Obligations of the Customer	9-9	
9.4 Payment Arrangements	9-11	
9.5 Rate Regulations	9-14	
9.6 Rates and Charges	9-19	
9.7 Electronic Listing Access Service	9-20	
9.7.1 General	9-20	
9.7.2 Under Taking of the Telephone Company	9-21	
9.7.3 Obligations of the Customer	9-23	
9.7.4 Optional Features	9-24	
9.7.5 Credit Allowance	9-24	
9.7.6 Rate Regulations	9-24	
9.7.7 Rate and Charges	9-26	(N)

(This page filed under Transmittal No. 1)

9. Directory Assistance Service

The Telephone Company will provide Directory Assistance (DA) Service to a customer from Directory Assistance Service locations (DA location).

9.1 General Description

DA Service provides Directory Access Service to DA locations, use of DA access equipment, and use of DA operators to provide telephone numbers.

9.2 Undertaking of the Telephone Company

(A) A Telephone Company DA operator, when furnished a name and locality, will provide or attempt to provide the telephone number listed in the Telephone Company DA records associated with the name given at the rates and charges as set forth in 9.6 following. The Telephone Company's contact with the customer's end user shall be limited to that effort necessary to process a customer's end user's request for a telephone number; and the Telephone Company will not transfer, forward or redial a customer's end user call to any other location for any purpose other than provision of DA Service.

(B) A maximum of two (2) requests for telephone numbers will be accepted per call to the DA operator.

(C) A telephone number which is not listed in DA records will not be available to the customer's end user.

(D) The Telephone Company will specify the DA location which provides the DA Service for each numbering plan area code (NPA). The DA locations are as shown in EXCHANGE CARRIER ASSOCIATION TARIFF F.C.C. No. 4.

When it becomes necessary, as determined by the Telephone Company, to change a DA location, the Telephone Company will notify the involved customers six months prior to the change. For such changes, the regulations as set forth in 2.1.7 preceding apply.

9. Directory Assistance Service (Cont'd)

9.2 Undertaking of the Telephone Company (Cont'd)

(E) When DA Service is ordered, Directory Access Service will be provided between the customer designated premises and the DA location by the Telephone Company at rates and charges as set forth in 9.6 following.

(1) General

Each Directory Access Service will consist of the following:

- An Interface Group equipped with an available Premises Interface Code at the customer's premises as set forth in (2) following.

- Directory Transport between the premises of the ordering customer and the DA location as set forth in (3) following.

When required by the Telephone Company, a separate Directory Access Service trunk group will be provided for DA Service for each NPA. Separate trunk groups will be required when the Telephone Company notifies the customer that the mechanized search of its data base and its mechanized operator practices require a mechanized identification of the NPA code for which the customer's end user desires DA information.

Further, when an access tandem is available and is provided, the Directory Access Service will be provided, at Telephone Company choice, either as a separate Directory Access Service trunk group or in combination with Access Trunk Arrangements or Feature Group B, C or D Switched Access Service.

9. Directory Assistance Service (Cont'd)

9.2 Undertaking of the Telephone Company (Cont'd)

(E) (Cont'd)

(2) Interface Group and Premises Interface Code

Interface Groups 2 through 10, as set forth in 15.1.11 following are available for Directory Access Service. When only Directory Access Service is provided, only the following Premises Interface Codes are available:

4DS9-15	6EA2-E	4RV2-0
4DS9-31	6EA2-M	4AH5-B
4DS0-63	4SF3	4AH6-C
4DS6-44		4AH6-D
4DS6-27		

Such Premises Interface Codes are described in 15.1.11 following. When Directory Access Service is combined with Access Trunk Arrangements or Feature Group B, C or D Switched Access Service, the Premises Interface Code for the combination will be the available Premises Interface Code provided for the Access Trunk Arrangements or Feature Group B, C or D Switched Access Service ordered by the customer. Except as set forth in 9.4 following, the Interface Groups and Premises Interface Codes provided under a Special Order for Directory Access Service are subject to the order conditions as set forth in 5. preceding. For purposes of applying the order regulations, a DA location is considered to be a customer end user serving wire center.

9. Directory Assistance Service (Cont'd)

9.2 Undertaking of the Telephone Company (Cont'd)

(E) (Cont'd)

(3) Directory Transport

Directory Transport provides the transmission facilities and transport termination between the premises of the ordering customer and the DA location.

Directory Transport is a two-way voice frequency transmission path composed of facilities determined by the Telephone Company. The two-way voice frequency path transports calls in the terminating direction (from the premises of the ordering customer to the DA location). The voice frequency transmission path may be comprised of any form or configuration of plant capable of and typically used in the telecommunications industry for the transmission of voice and associated telephone signals within the frequency band width of approximately 300 to 3000 Hz.

The Telephone Company will determine whether the Directory Access Service is to be routed directly to a DA location or through an access tandem switch appropriately equipped for DA measurement and served by DA trunks to the DA location when such an access tandem switch is available. The combination of Access Trunk Arrangements or Feature Group B,C or D Switched Access Service with DA Service will only be provided at such available and appropriately equipped access tandem switches. If the customer desires the traffic routing to be other than that selected by the Telephone Company, it may request a cooperative effort to determine if customer specified traffic routing can be used in lieu of the Telephone Company selected traffic routing.

When Directory Transport is provided using a direct route to the DA location, no address signaling is provided. When Directory Transport is provided with the use of an access tandem switch, wink start-start pulsing signaling is provided at the access tandem switch. The customer will be notified by the Telephone Company when access tandem

9. Directory Assistance Service (Cont'd)

9.2 Undertaking of the Telephone Company (Cont'd)

(E) (Cont'd)

(3) Directory Transport (Cont'd)

routing is provided and the customer shall address each call to the DA location using NPA + 555 + 1212 or when required by the Telephone Company, 555-1212. Only NPA codes handled by the DA location served by the access tandem switch will be processed.

Directory Transport may, at the option of the customer, be provided for both interstate and intrastate communications. When the customer requests such mixed access, the interstate Directory Transport charges will be determined by the Telephone Company using the data furnished by the customer as set forth in 2.3.15 preceding.

Except as set forth in 9.4 following, Directory Transport provided under a Special Order is subject to the order conditions as set forth in 5. preceding.

9. Directory Assistance Service (Cont'd)

9.2 Undertaking of the Telephone Company (Cont'd)

(E) (Cont'd)

(4) Special Facilities Routing

A customer may request that Directory Access Service be provided via Special Facilities Routing. The regulations, rates and charges for Special Facility Routing (Avoidance, Diversity and Cable Only) are as set forth in 11. following.

(5) Design Layout Report

The Telephone Company will provide to the customer the makeup of the facilities and services provided under this section as Directory Access Service. This information will be provided in the form of a Design Layout Report similar to that as set forth in 6.1.4. Design Layout Reports for Directory Access Service will be provided only when specifically requested by the customer. The Design Layout Report will be provided to the customer at no charge, and will be reissued or updated whenever the facilities provided for the customer's use are materially changed.

(6) Transmission Specifications

Directory Access Service is provided with either Type A or B Transmission Specification. The specifications associated with the parameters are guaranteed to the DA location, whether routed directly or via an access tandem. Type B Transmission Specification is provided with Interface Groups 2 through 10 when routed direct to a DA location. Type A Transmission Specification is provided with Interface Groups 2 through 10 when routed via an access tandem switch.

9. Directory Assistance Service (Cont'd)

9.2 Undertaking of the Telephone Company (Cont'd)

(E) (Cont'd)

(6) Transmission Specifications (Cont'd)

When DA Service is combined with Access Trunk Arrangement 101XXXX or Feature Group D Switched Access Service, Type A Transmission Specification is provided. When DA Service is combined with Access Trunk Arrangement 950 or Feature Group B Switched Access Service, Type B Transmission Specification is provided for Interface Groups 2 through 10. When DA Service is combined with Access Trunk Arrangement NEA or Feature Group C Switched Access Service, Type B Transmission Specification is provided.

Type A and B Transmission Specifications are set forth in 6.4 preceding.

(7) Acceptance Testing and Testing Capabilities

The acceptance testing and testing capabilities for Directory Access Service traffic routed through an access tandem are the same as those for the associated Access Trunk Arrangement NEA or 101XXXX or Feature Group C or D end office switching. The acceptance testing for Directory Access Service traffic routed directly to or routed in separate trunk groups through an access tandem to the DA location will be as set forth in 6.1.5 preceding. The testing capabilities for Directory Access Service traffic routed directly to or routed in a separate trunk group through an access tandem to the DA location will be as set forth for Additional Manual Cooperative Testing or Additional Manual Testing in 13.3.5 following.

(F) Trunk side switching is provided at the DA Service access location. The DA Service access location will provide trunk answer and disconnect supervisory signaling.

9. Directory Assistance Service (Cont'd)

9.2 Undertaking of the Telephone Company (Cont'd)

(G) The Telephone Company will distribute the calls received over the Directory Access Services to the DA operators using the DA location access equipment.

(H) In the event that the telephone number is unavailable to the DA operator, no credit applies for the charge for the call to the DA operator. When the DA location or DA operator equipment or terminals are out of service due to a Telephone Company equipment failure or an incorrect number is provided, a credit as set forth in 9.4(G) following will apply.

(I) DA Service may, at the option of the customer, be provided for interstate and intrastate communications. When the customer requests such mixed access, the interstate DA Service charges will be determined by the Telephone Company using the data furnished by the customer as set forth in 2.3.15 preceding.

9.3 Obligations of the Customer

(A) The customer shall determine and order the number of lines or trunks and interface type of Directory Access Services it needs for DA Service.

(B) When DA Service is initially ordered, the customer shall order the service for at least six months. Thereafter, additional service may be ordered for a minimum of six months. Not later than three months prior to the end of the six month period, the customer shall notify the Telephone Company if the service is to be discontinued at the end of the six month period. If no notice is received from the customer, the Telephone Company will automatically extend the service for another six months and all appropriate charges as set forth in 9.6 following will apply for another six months.

9. Directory Assistance Service (Cont'd)

9.3 Obligations of the Customer (Cont'd)

(C) The customer facilities at the premises of the ordering customer shall provide the necessary on-hook and off-hook supervision.

(D) When requested by the Telephone Company, the customer shall order a separate trunk group for DA Service for each NPA. The conditions when the customer will be requested to order separate trunk groups for each NPA are set forth in 9.2(E)(1) preceding.

(E) When the customer bills its end users, the customer shall be responsible for all contacts and arrangements with its end users concerning the provision and maintenance of, and the billing and collecting of charges, for DA Service furnished to its end users. When the Telephone Company bills the customer's end users at the request of the customer, contacts and arrangements with customer's end users concerning the billing and collecting of charges will be negotiated on an individual case basis.

(F) The customer understands that DA operators will respond to only two (2) telephone number requests per call and will not transfer, forward or redial the call to another location for any purpose other than the provision of DA Service.

9. Directory Assistance Service (Cont'd)

9.4 Payment Arrangements

(A) Minimum Periods

The minimum period for which DA Service and the Directory Access Service is provided and for which charges apply is six months. A minimum period of six months applies for each additional period of service ordered or extended.

If DA Service is discontinued prior to the end of each six month period, the charges that apply for the remaining months are the non-recoverable costs. Such costs include the non-recoverable cost of equipment and material ordered, provided or used, plus the non-recoverable cost of installation and removal including the costs of engineering, labor, supervision, transportation, rights-of-way and other associated costs less estimated net salvage.

(B) Minimum Monthly Charge

DA service is subject to a minimum monthly charge. The minimum monthly charge consists of the following elements:

For those rate elements that are billed a flat monthly rate, i.e., Directory Transport options, the minimum monthly charge is the monthly rate as set forth in 9.6 following.

The minimum monthly charge for Directory Assistance Service calls is the charge as set forth in 9.6 following for the actual usage for the month.

For the Directory Transport rate element, the minimum monthly charge the customer will be assessed will be the usage charges based on actual usage. Rates for actual usage are set forth in 9.6 following.

9. Directory Assistance Service (Cont'd)

9.4 Payment Arrangements (Cont'd)

(C) Cancellation of a Special Order

A customer may cancel a Special Order for DA Service on any date prior to the service date. The cancellation date is the date the Telephone Company receives written or verbal notice from the customer that the Special Order is to be cancelled. The verbal notice must be followed by written confirmation within 10 days.

When a customer cancels a Special Order for DA Service after the order date but prior to the start of service, the appropriate charges as set forth in 5. preceding apply for the Directory Access Service cancelled. In addition, a charge equal to any unrecoverable capital costs incurred by the Telephone Company will apply to the customer.

(D) Changes to Special Orders

When a customer requests changes to a pending order for DA Service, such changes will be undertaken if they can be accommodated by the Telephone Company. The appropriate charges as set forth in 5. preceding apply for the Directory Access Service changed. In addition, a charge equal to any other costs incurred by the Telephone Company because of the change will apply.

(E) Moves

A move involves a change in the physical location of the point of termination at the customer designated premises or of the customer designated premises. Moves will be treated as set forth in 6.7.5 preceding and all associated nonrecurring charges will apply. Minimum period requirements will be established at the new location as set forth in 6.7.2 preceding. The customer will also remain responsible for satisfying all outstanding minimum period charges for the discontinued service.

9. Directory Assistance Service (Cont'd)

9.4 Payment Arrangements (Cont'd)

(F) DA Service Rearrangements

Nonrecurring charges apply for service rearrangements. Service rearrangements are as set forth in 6.7.1 (C)(3) preceding. The Service Rearrangement Charges are as set forth in 6.7.1 (C)(3) for the type of change provided by the Telephone Company.

(G) Credit Allowance for DA Service

(1) When the DA location or DA operator equipment or terminals are out of service due to a Telephone Company equipment failure or an incorrect number is provided and a customer DA call has been answered or forwarded to a DA operator, a credit allowance for a call answered or forwarded to the DA operator equal to the rate for a Directory Assistance Service Call as set forth in 9.6(A) following plus the rate for a Directory Transport call as set forth in 9.6(B) following will be applied to the customer's charges.

(2) In addition to the credit as set forth in (1) preceding, when a DA operator or DA equipment provides an incorrect number for a call and the customer reports such occurrences to the Telephone Company, a credit allowance for such DA call will apply. The credit will be as set forth in (3) following. When the customer reports such a call and the number requested, the number provided and the reason the number provided is incorrect, the number of calls for which a credit will apply will be developed by the Telephone Company in cooperation with the customer.

9. Directory Assistance Service (Cont'd)

9.4 Payment Arrangements (Cont'd)

(G) Credit Allowance for DA Service (Cont'd)

(3) When a DA call is not completed due to the failure of Directory Access Service to DA locations, DA access equipment or DA operator activities, a credit allowance for the Switched Access Service portion in the originating LATA of such DA call will apply. When the customer reports such a call and DA number dialed, time of the call and the date of the call, the number of calls for which a credit will apply will be developed by the Telephone Company in cooperation with the customer. The credit will be as set forth following:

a) Credit per call when Switched Access Service is billed using Transitional per minute rates	$0.000880(I)
b) Credit per call when an Access Line Arrangement or Feature Group A and/or an Access Trunk Arrangement 950 or Feature Group B Switched Access Service is billed using Premium per minute rates	$0.001059(I)
c) Credit per call when an Access Trunk Arrangement NEA or Feature Group C and/or Access Trunk Arrangement 101XXXX or Feature Group D Switched Access Service is billed using Premium per minute rates	$0.001059(I)

(4) Credit allowances for other service interruptions will be provided as set forth in 2.4.4 preceding.

9.5 Rate Regulations

(A) The Directory Assistance service call charge, as set forth in 9.6 (A) following, applies for each completed call to a Directory Assistance operator. A call is a call which has been answered by a DA operator. The charge applies whether or not the DA operator provides the requested telephone number. The number of calls answered by DA operators will be accumulated by Telephone Company measuring equipment. A credit for the provision of an incorrect telephone number will be applied as set forth in 9.4(G) preceding.

Rates contained in this transmittal are subject to subsequent adjustment, effective retrospectively, in the event the Commission or a court subsequently authorizes Nevada to correct its rates pursuant to pending motions, or petitions for reconsideration or waiver, or in the event of any other adjustment to an order of the Commission or a court.

(This page filed under Transmittal No. 67)

9. Directory Assistance Service (Cont'd)

9.5 Rate Regulations (Cont'd)

(B) The Directory Transport provides the transmission facility and transport termination from the serving wire center for the premises of the ordering customer to the DA location. Title Page notwithstanding, these two wire centers may be in different LATAs. In addition, the premises of the ordering customer must be in the LATA where DA service is requested or in the LATA where the DA location is located. The rate for Directory Transport is calculated on a per call basis.

(C) The charge per call for Directory Transport, as set forth in 9.6(B) following, applies for each call to DA service. A call is as set forth in (A) preceding. The number of calls will be accumulated as set forth in (A) preceding.

(D) There are two types of charges applicable to Directory Transport: Nonrecurring and Recurring. Paragraphs (1) through (6) following set for the Directory Transport rate elements and how the recurring charges are applied for the elements. The Directory Transport elements that apply are Entrance Facility, Direct Trunked Transport and/or Tandem Switched Transport, and Directory Transport Interconnection Charge. When Tandem Switched Transport is provided, the Directory Transport tandem Switching element applies. When an Entrance Facility and/or a Direct Trunked Transport Facility require Multiplexing as set forth in 6.7.1 preceding, a Multiplexing arrangement charge applies. Paragraph (7) following sets forth the nonrecurring charges.

9. Directory Assistance Service (Cont'd)

9.5 Rate Regulations (Cont'd)

(D) (Cont'd)

(1) Directory Transport Entrance Facility

A Directory Transport Entrance Facility rate is applied for a VG/DSO, DS1 and DS3 Transport Channel on a point of termination per month basis. The regulations for these charges are the same as set forth in 6.7.1(D)(1) preceding for Entrance Facility. The rates are as set forth in 6.8.1(A) proceeding.

(2) Directory Transport Direct Trunked Transport

Directory Transport Direct Trunked Transport Facility rates are applied on a per Transport Channel per month fixed and per month per mile basis. The regulations for these charges are the same as set forth in 6.7.1(D)(2) preceding for Direct Trunked Transport. The rates are as set forth in 6.8.1(B) preceding.

(3) Directory Transport Tandem Switched Transport

Tandem-Switched Transport is provided as four sub-elements:

- Tandem-Switched Directory Transmission
- Directory Tandem Switching
- Dedicated Tandem Trunk Port
- Tandem DA Location Multiplexing

(a) Tandem-Switched Directory Transmission

A per call rate and a per call per mile rate applies to each DA call which has been answered by or forwarded to a DA operator when the transport was provided using a Tandem-Switched Transport Facility. Mileage measurement is described in (4) following.

9. Directory Assistance Service (Cont'd)

9.5 Rate Regulations (Cont'd)

(D) (Cont'd)

(3) Directory Transport Tandem Switched Transport (Cont'd)

(b) Directory Tandem Switching

A rate per call applies to each DA call which has been answered by or forwarded to a DA operator when the transport was provided using a Tandem-Switched Transport facility.

(c) Tandem DA Location Multiplexing

A per call charge applies for the use of the multiplexing equipment on the DA location side of the access tandem.

(d) Dedicated Tandem Trunk Port

A monthly rate applies, per port, for each dedicated trunk on the serving wire center side of the access tandem.

(4) Mileage

The mileage for Directory Transport is measured from the serving wire center for the premises of the ordering customer to the DA location. These two wire centers may be in different LATAs. In addition, the premises of the ordering customer must be in the LATA where DA Service is requested or in the LATA of the DA location. The measurement will be performed and charges determined as described in 6.7.11 (Determining Switched Transport Mileage and Charges).

(5) Directory Transport Interconnection Charge

Directory Transport Interconnection Charge provides for residual transport and switching functions not assigned to other Directory Transport rate elements. The DA Interconnection Charge is divided into two sub-elements, i.e., the DA Interconnection Charge and the DA Facilities-Based Interconnection Charge. The DA Interconnection Charge is a usage rate which applies for each call which has been answered by or forwarded to a DA operator. The DA Non-Facilities-Based Interconnection Charge will be assessed in lieu of the DA Interconnection Charge for all traffic which uses the Telephone Company's local switching services but does not use the Telephone Company's transport services. The number of calls answered by or forwarded to DA operators will be accumulated by Telephone Company measuring

9. Directory Assistance Service (Cont'd)

9.5 Rate Regulations (Cont'd)

(D) (Cont'd)

(5) Directory Transport Interconnection Charge (Cont'd)

equipment. As set forth above, either the DA Interconnection Charge or the Facilities-Based Interconnection Charge applies whether or not the DA operator provides the requested number.

(6) Directory Transport Multiplexing

The multiplexing rate is applied on a per Multiplexing arrangement basis. The regulations for these charges are the same as set forth in 6.8.1(I) preceding for Multiplexing. The rates are as set forth in 6.8.1(I) following.

(7) Directory Transport Tandem Switched Transport provided over Direct Trunked Transport DS1 and DS3 Transport Channels

When Directory Transport Tandem Switched Transport is provided over Direct Trunked Transport DS1 and DS3 Transport Channels, the Direct Trunked Transport rates will be adjusted and the Directory Transport Tandem Switched Transport will be billed the per call fixed and per call per mile rates for all calls as set forth in (3) preceding.

Regulations for Directory Transport Tandem Switched Transport provided over Direct Trunked Transport DS1 and DS3 Transport Channels are the same as set forth in 6.7.1(D)(8) preceding for Tandem Switched Transport provided over Direct Trunked Transport DS1 and DS3 transport channels.

(8) Nonrecurring Charges

Nonrecurring charges are one time charges associated with the installation of Directory Transport and the change of Directory Transport. The regulations for these charges are the same as set forth in 6.7.1(C) for Switched Transport. The charges for Directory Transport are set forth for the selected Transport facility in 9.6(C) following.

(This page filed under Transmittal No. 1)

9. Directory Assistance Service (Cont'd)

9.5 Rate Regulations (Cont'd)

(9) Directory Transport Application

Regulations for Directory Transport Application are the same as set forth in 6.7.1(D)(9) preceding for Transport Application.

9.6 Rates and Charges

The rates and charges are:

	Rates
(A) Directory Assistance Service call, each	$0.2990
(B) Directory Access Service	
- Directory Access Installation Charge	Charges are the same as those set forth in 6.8.1(B) preceding

(C) Directory Tandem Switched Transport	Rates
Tandem-Switched Directory Transmission	
- Rate per call	$0.000102(R)
- Rate per call per mile	$0.000007(R)
Directory Tandem Switching per call	$0.002193(R)
Tandem Directory Assistance Location Multiplexing	
- Rate per call	$0.000029(R)

Dedicated Tandem Trunk Port

Monthly recurring rates for Dedicated Tandem Trunk Ports used for Directory Assistance Access Service are those contained in 6.8.1(c)(5)

(D) Directory Assistance Transport Interconnection Charge	Rates Per Call
(1) Directory Assistance Interconnection Charge	
-Premium	$0.000000
-Non-Premium	0.000000
(2) Directory Assistance Non-Facilities-Based Interconnection Charge	$0.000000

Rates contained in this transmittal are subject to subsequent adjustment, effective retrospectively, in the event the Commission or a court subsequently authorizes Nevada to correct its rates pursuant to pending motions, or petitions for reconsideration or waiver, or in the event of any other adjustment to an order of the Commission or a court.

(This page filed under Transmittal No. 44)

9. Directory Assistance (Cont'd)

9.7 Electronic Listing Access Service

9.7.1 General

Electronic Listing Access Service (ELAS) allows customers to obtain interstate direct electronic access to the Telephone Company's directory listings without involvement of a Directory Assistance Operator or referencing published white pages.

The ELAS database will provide the customer or the customer's end user with detail for business, residence or government published listings when a search for a name is initiated. To perform a search the user must input at least a last name, locality and area code. Other search parameters based on directory listing information may be available as enhancements to the ELAS system are made. The information provided by the system will include, where available: listing name, listing address, telephone number and ZIP code. The listings will be arranged under business, residential and government categories.

The customer or the customer's end users will not have the capability to make additions, deletions, modifications, or enhancements to the listing information in the ELAS database.

The ELAS database is and shall remain the sole property of the Telephone Company. Customers and customer's end users are permitted to extract listing data to:

- Verify data in the customers or customer's end users possession.
- Update lists in the customers or customer's end users possession.
- Supplement lists in the customers or customer's end users possession.
- Provide lists compiled in this manner to third parties.

The information provided pursuant to this tariff may not be used to provide intraLATA traditional live or recorded voice Directory Assistance services. The customer will require each end user to comply with the restrictions and requirements of this tariff.

9. Directory Assistance (Cont'd)

9.7 Electronic Listing Access Service (Cont'd)

9.7.2 Undertaking of the Telephone Company

(A) The ELAS database, will provide the listing detail information associated with a search request for all published telephone numbers within the Telephone Company's region, at the rates and charges set forth in 9.7.7. The ELAS system will provide the same published listing information, where available (name, address, community, telephone number and ZIP code), that is contained in the Telephone Company's listing database. This will include listing information of other local exchange companies where agreements for use of listing information have been negotiated.

(B) The ELAS database will be updated five times per week excluding holidays.

(C) Non-published listings will not be included in the ELAS database.

(D) The ELAS database may be accessed through the database host Telephone Company's packet switching network. The database host Telephone Company will provide the circuit connection terminating facilities from the Public Packet Switched Network to the ELAS database. The database host Telephone Company will provide the customer with the Public Packet Switched Network address (Data Telephone Number) and other data communications requirements.

The ELAS database may also be accessed through a dedicated network. The customer must order Special Access Service and/or Public Packet Switched Network Service to the ELAS database.

(E) The Telephone Company will bill customers on a monthly basis at rates as set forth in 9.7.7 following.

9. Directory Assistance (Cont'd)

9.7 Electronic Listing Access Service (Cont'd)

9.7.2 Undertaking of the Telephone Company (Cont'd)

(F) ELAS will provide data without screen formatting characters. The customer must provide the software interface to format the information received from the ELAS database.

(G) The ELAS system will be available 7 days a week, 24 hours per day. In the event that the ELAS system becomes unavailable, the Telephone Company will devote reasonable efforts to restore system availability. In the event that the ELAS system requires unscheduled maintenance, the Telephone Company will notify the customer as soon as possible of such a requirement. For scheduled maintenance which would result in the ELAS system being unavailable, the Telephone Company will negotiate, to the extent possible, system downtime with its customers.

(H) Transmission of listing information from the ELAS system to the customer or the customer's end user will be formatted as specified in Technical Reference TR 41454. The Telephone Company will utilize reasonable efforts to meet the performance standards set forth in the above mentioned technical reference.

(I) The Telehpone Company will provide the customer with the following ELAS support.

(1) Establishment of initial User ID and will change User ID at customer request within 24 hours.

(2) Add and remove users through individual account record maintenance.

(3) Maintain files on the ELAS system, including the listing database, tables required to provide service User ID and password files and billing records.

(4) Perform regular backup of customer accounting files and the entire ELAS database as necessary.

9. Directory Assistance (Cont'd)

9.7 Electronic Listing Access Service (Cont'd)

9.7.3 Obligations of the Customer

In addition to the regulations set forth in Section 2 preceding, the customer has certain specific obligations pertaining to the use of the Telephone Company's Electronic Listing Access Service. The obligations of the customer are as follows:

(A) Because the ELAS database will reside in a database host's telephone company territory, the customer must arrange for connection to the Public Packet Switching Network at the location where the database will reside. Rates and charges associated with these connections will apply in addition to the rates and charges specified for ELAS.

(B) The customer will be responsible for all contacts and arrangements with its end users concerning the provision and maintenance of ELAS. The customer is also responsible for the billing and collection of charges for ELAS furnished to its end users.

(C) The data transmitted from the ELAS database does not include screen formatting characters. The customer is responsible for providing the software interface required to format the ELAS information.

(D) The customer shall order or provide User ID numbers for assignment to its end users to track usage by session for searches made in the ELAS database. The customer shall be liable for all charges incurred by the User IDs assigned to its end users. Notification to deactivate any User ID must be provided to the Telephone Company at least 24 hours prior to such action taking place. The customer is responsible for all usage charges associated with the User ID until its deactivation, not to exceed 24 hours from the time notification to deactivate the User ID is received by the Telephone Company. In the event of unauthorized use of the User ID, the customer is responsible for notifying the Telephone Company. The charges incurred up to the time of notification are the responsibility of the customer.

9. Directory Assistance (Cont'd)

9.7 Electronic Listing Access Service (Cont'd)

9.7.4 Optional Features

At the option of the customer, a User Detail record is available in conjunction with the ELAS. The User Detail option provides the following information:

- o Customer ID
- o Date
- o NPA (Area Code)
- o Number of Inquiries
- o Number of Screens
- o Connect Time

9.7.5 Credit Allowance

No credit will apply in the event that the number requested is not found or not listed in the Telephone Company's ELAS database.

9.7.6 Rate Regulations

There are two types of charges applicable to ELAS: Nonrecurring and Screen Usage Charges. Additional charges associated with access to the ELAS database via Public Packet Switching or Special Access Service will also apply.

(A) Nonrecurring Charges

Nonrecurring charges are one time charges associated with the establishment of service and the establishment or change of User IDs.

9. Directory Assistance (Cont'd)

9.7 Electronic Listing Access Service (Cont'd)

9.7.6 Rate Regulations (Cont'd)

(1) Service Establishment Charge

The Service Establishment Charge will be charged at the time the customer orders ELAS and establishes a billing account. The customer will select the methods of access and optional usage reports desired. A customer may establish more than one billing account. The Service Establishment Charge is limited to the ELAS and not for the establishment of network transport facilities. The Service Establishment Charge includes the establishment of one Test User ID for internal testing by the customer. This User ID will be active for 30 days from the Service Establishment date and will not incur any Screen Usage Charges.

(2) User ID Charge

The User ID Charge is incurred with the establishment of each User ID. Customers may request more than one User ID per billing account.

(B) Screen Usage Charges

Screen Usage Charges apply to each screen returned from the ELAS database in response to a directory listing inquiry from the customer or the customer's end user. A screen may contain from 1 to 10 subscriber listings. Screen Usage Charges will not apply to the Test User ID.

9. Directory Assistance (Cont'd)

9.7 Electronic Listing Access Service (Cont'd)

9.7.7 Rate and Charges

(A)	Service Establishment Charge	$375.00
(B)	User ID Charges (per User ID)	$20.00
(C)	Screen Usage Charge (per screen access)	$0.17

(This page filed under Transmittal No. 1)

ACCESS SERVICE

		Page No.	
10.	FEDERAL GOVERNMENT SPECIALIZED SERVICE OR ARRANGEMENT	10-2	
10.1	General	10-2	
10.2	Emergency Conditions	10-2	
10.3	Intervals to Provide Service	10-3	
10.4	Safeguarding of Service	10-4	
10.4.1	Facility Availability	10-4	
10.4.2	Utilization of Government Owned Facilities	10-4	
10.5	Federal Government Regulations	10-4	
10.6	Mileage Application	10-4	
10.7	Moves	10-5	
10.8	Service Offerings	10-6	
10.8.1	Type and Description	10-6	
10.8.2	Rates and Charges	10-20	(N)

(This page filed under Transmittal No. 1)

10. Federal Government Specialized Service or Arrangements

10.1 General

This section covers Specialized Services or Arrangements that are provided to a customer for use only by agencies or branches of the Federal Government and other users authorized by the Federal Government. Services provided to state emergency operations centers are included. These services provide for command and control communications, including communications for national security, emergency preparedness and presidential requirements. They are required to assure continuity of Government in emergency and crisis situations and to provide for national security. In addition, this section covers the Telecommunications Service Priority (TSP) System service and procedures as set forth in 10.8.1 (D) since it is administered by the Federal Government.

Services for command and control communications and for national security and emergency preparedness sometimes require short notice and short duration service provisions. These provisions are especially needed to meet presidential requirements or in response to natural, man-made, or declared emergencies. Requirements of this type cannot be forecasted and are usually needed for a relatively short period. The provision of service under these conditions may require the availability of facilities, such as portable microwave equipment, which are provided on a temporary basis by the Telephone Company, customer or end user.

10.2 Emergency Conditions

These services will be provided on the date requested or as soon as possible thereafter when the emergency falls into one of the following categories:

(A) State of crisis declared by the National Command Authorities (includes commitments made to the National Communications System in the "National Plan for Emergencies and Major Disasters").

10. Federal Government Specialized Service or Arrangements (Cont'd)

10.2 Emergency Conditions (Cont'd)

(B) Efforts to protect endangered U.S. personnel or property both in the U.S. and abroad. (Includes space vehicle recovery and protection efforts.)

(C) Communications requirements resulting from hostile action, a major disaster or a major civil disturbance.

(D) The director (Cabinet level) of a Federal department, Commander of a Unified/Specified Command, or head of a Military department has certified that a communications requirement is so critical to the protection of life and property or to the National Defense that it must be processed immediately.

(E) Political unrest in foreign countries which affect the national interest.

(F) Presidential service.

10.3 Intervals to Provide Service

Certain services provided under the provisions of this section of the tariff are provided on an individual case basis. Therefore, orders for such service shall be placed under the Negotiated Internal provisions set forth in 5.2.1 (B) preceding.

10. Federal Government Specialized Service or Arrangements (Cont'd)

10.4 Safeguarding of Service

10.4.1 Facility Availability

In order to insure communications during periods of emergency, the Telephone Company will, within the limits of good management, make available the necessary facilities to restore service in the event of damage or to provide temporary emergency service as set forth in 10.8.1 (D) and 10.8.2 (D) following.

10.4.2 Utilization of Government Owned Facilities

In order to meet the requirements of agencies or branches of the Federal Government, the Telephone Company may utilize government-owned facilities, when necessary to provide service.

10.5 Federal Government Regulations

In accordance with Federal Government Regulations, all service provided to the Federal Government will be billed in arrears. However, this provision does not apply to other customers that obtain services under the provisions of this tariff to provide their services to the Federal Government.

10.6 Mileage Application

Mileage, when used for rate application in this section of the tariff shall be determined by the V and H Coordinates Method as set forth in NATIONAL EXCHANGE CARRIER ASSOCIATION, INC., WIRE CENTER AND INTERCONNECTION INFORMATION, TARIFF F.C.C. No. 4 and administered as set forth in 7.4.6 preceding.

10. Federal Government Specialized Service or Arrangements (Cont'd)

10.7 Moves

When service without a maximum termination liability charge associated with it, as set forth in 10.8.1 and 10.8.2 following is moved to a different building, the nonrecurring charge applies; when moved to a new location in the same building, a charge of one-half the nonrecurring charge applies.

When service with a maximum termination liability charge associated with it, as set forth in 10.8.1 and 10.8.2 following is moved and is reinstalled at a new location, the customer may elect:

- to pay the unexpired portion of the maximum termination liability charge for the service, if any, with the application of a nonrecurring charge and the establishment of a new maximum termination liability charge for such service at the new location, or

- to continue service subject to the unexpired portion of the maximum termination charge, if any, and pay the estimated costs of moving such service, provided that the customer request these charges be quoted prior to ordering the service move. Charges for moving such service will be based on estimated costs attributable to the move.

Move charges include the estimated costs of removal, restoration of service or facilities necessitated by the move, transportation, storage, reinstallation, engineering, labor, supervision, materials, administration, and any other specific items of most directly attributable to the move.

10. Federal Government Specialized Service or Arrangements (Cont'd)

10.8 Service Offerings

The following unique services are provided to a customer for use only by agencies or branches of the Federal Government, other authorized users and state emergency operations centers. The rates and charges for certain services shall be developed on an individual case basis and shall be consistent with the rates and charges for services offered in other sections of this tariff.

10.8.1 Type and Description

(A) Voice Grade Special Access Services

(1) Voice Grade Secure Communications Type I

Approximate bandwidth of 10-50,000 Hertz. Furnished for two-point secure communications on two-wire or four-wire metallic facilities between a customer terminal location and an end user's premises. Services are conditioned as follows:

T-3 Conditioning - The absolute loss (referenced to 1 milliwatt) with respect to frequency shall not exceed:

15 dB at 10 Hz
13 dB at 100 Hz
9 dB at 1,000 Hz
20 dB at 10,000 Hz
30 dB at 50,000 Hz

10. Federal Government Specialized Service or Arrangements (Cont'd)

10.8 Service Offerings (Cont'd)

10.8.1 Type and Description (Cont'd)

(A) Voice Grade Special Access Services (Cont'd)

(1) Voice Grade Secure Communications Type I (Cont'd)

Additional conditioning (available in one or two directions on four-wire facilities only) to provide the following characteristics:

The absolute loss (referenced to one milliwatt) with respect to frequency shall not exceed:

0 dBat 1,000 Hz
± 1 dB between 1,000 Hz and 40,000 Hz
± 2 dB between 10 Hz and 50,000 Hz
(+ means more loss)

The net loss of the conditioned service (with or without additional conditioning) shall not vary by more than four dB at 1,000 Hz from the levels specified above. Voice frequency signaling or supervisory tones can be transmitted.

(2) Voice Grade Secure Communications Type II

Approximate bandwidth 10-50,000 Hz. Furnished on four-wire metallic facilities for duplex operation for two-point secure communication between a customer terminal on an end user's premises and an end user's premises. Services are conditioned as follows:

G-1 Conditioning - The absolute loss with respect to frequency and the net loss variation shall be the same as Voice Grade Secure Communications Type I services without additional conditioning. Voice frequency signaling or supervisory tones can be transmitted.

10. Federal Government Specialized Service or Arrangements (Cont'd)

10.8 Service Offerings (Cont'd)

10.8.1 Type and Description (Cont'd)

(A) Voice Grade Special Access Services (Cont'd)

(3) Voice Grade Secure Communications Type III

Approximate bandwidth 10-50,000 Hz. Furnished on four-wire metallic facilities for duplex operation for two-point secure communications between a customer premises switch and an end user's premises. Services are conditioned as follows:

G-2 Conditioning - The absolute loss with respect to frequency and the net loss variation from the switch to an end user's premises shall be the same as Voice Grade Secure Communications Type I services without additional conditioning; from an end user's premises to the switch shall be the same as Voice Grade Secure Communications Type I services with additional conditioning. Voice frequency signaling or supervisory tones can be transmitted.

(4) Voice Grade Secure Communications Type IV

Approximate bandwidth 10-50,000 Hz. Furnished on four-wire metallic facilities for duplex operation for two-point secure communication between two customer premises switches. Services are conditioned as follows:

G-3 Conditioning - The absolute loss with respect to frequency and the net loss variation shall be the same in both directions of transmission as Voice Grade Secure Communications Type I services with additional conditioning. Voice frequency signaling or supervisory tones can be transmitted.

10. Federal Government Specialized Service or Arrangements (Cont'd)

10.8 Service Offerings (Cont'd)

10.8.1 Type and Description (Cont'd)

(B) Wideband Digital Special Access Services

Service arrangements for secured communications to accommodate the transmission of binary digital baseband signals in a random polar format.

(1) Wideband Secure Communications Type I

For transmissions at the rate of 18,750 bits per second.

(2) Wideband Secure Communications Type II

For transmission at the rate of 50,000 bits per second.

(3) Wideband Secure Communications Type III

To accommodate the transmission of restored polar two-level facsimile signals with a minimum signal element width of twenty microseconds at a rate of 50,000 bits per second.

To accommodate the transmission of binary digital baseband signals in a random polar format at the rate of 50,000 bits per second.

(C) Special Routing Access Service

Special Routing Access Service is furnished only to AT&T Communications (AT&T-C) for an agency or branch of the Federal Government. This service provides the customer's end users the ability to originate and terminate calls to or from the customer's premises utilizing a Special Routing Plan.

10. Federal Government Specialized Service or Arrangements (Cont'd)

10.8 Service Offerings (Cont'd)

10.8.1 Type and Description (Cont'd)

(C) Special Routing Access Service (Cont'd)

This service is an optional service which operates in conjunction with Trunk Side Premium Access Service furnished to AT&T-C under other provisions of this tariff.

The Telephone Company will record Special Routing Access Service Active Mode Trunk Usage, and will bill the customer in accordance with these records. The hours for each trunk ordered will be summed and then rounded to the nearest hour, except that when the total is less than one hour, one hour will be used to determine the charge.

(D) Telecommunications Service Priority (TSP) System

(1) Priority installation and/or restoration of National Security Emergency Preparedness (NSEP) telecommunications services shall be provided in accordance with Part 64.401, Appendix A, of the Federal Communications Commission's (FCC's) Rules and Regulations.

In addition, TSP System service shall be provided in accordance with the guidelines set forth in "Telecommunications Service Priority (TSP) System for National Security Emergency Preparedness (NSEP) Service Vendor Handbook" NCS Handbook 3-1-2 dated December 1, 1989.

10. Federal Government Specialized Service or Arrangements (Cont'd)

10.8 Service Offerings (Cont'd)

10.8.1 Type and Description (Cont'd)

(D) Telecommunications Service Priority (TSP) System (Cont'd)

The TSP System is a service, developed to meet the requirements of the Federal Government as denoted in the NSEP Service Vendor Handbook, which provides the regulatory, administrative and operational framework for the priority installation and/or restoration of NSEP telecommunications services. These include Access Line Arrangement, Feature Group A Switched and Special Access Services. The TSP System applies only to NSEP telecommunications services, and requires and authorized priority action by the Telephone Company providing such services.

(2) TSP service applicability is limited to those access services which the Telephone Company can discretely identify for priority installation and/or restoration.

(3) Some of the elements required for the TSP System are included in other sections of this tariff as general service offerings. They have been repeated in this section to reflect the complete TSP System with appropriate references to those other sections of the tariff for regulations, rates and charges.

(4) The customer for TSP System Service also must be the same customer for the Access Service with which it is associated.

10. Federal Government Specialized Service or Arrangements (Cont'd)

10.8 Service Offerings (Cont'd)

10.8.1 Type and Description (Cont'd)

(D) Telecommunications Service Priority (TSP) System (Cont'd)

(5) Under certain conditions it may be necessary to preempt one or more customer services with a lower or no restoration priority in order to install or restore NSEP telecommunications service(s) of a higher priority. If such preemption is necessary, and if circumstances permit, the Telephone Company will make reasonable effort to notify the preempted service customer of the action to be taken. Credit allowance for such service preemption shall be made in accordance with the provisions set forth in 2.4.4(E) preceding concerning Temporary Surrender of a Service.

(6) The customer, in obtaining TSP System service, acknowledges and consents to the provision of certain customer service record information by the Telephone Company to the Federal Government in order for the Government to maintain and administer its overall TSP System. This customer service record information will include only customer name, TSP Authorization Code, Telephone Company Circuit/Service ID, customer telephone number and customer mailing address.

(7) When Priority Restoration Maintenance and Administration is discontinued and the associated Access Service is continued in service, no charge applies for such a discontinuance.

10. Federal Government Specialized Service or Arrangements (Cont'd)

10.8 Service Offerings (Cont'd)

10.8.1 Type and Description (Cont'd)

(D) Telecommunications Service Priority (TSP) System (Cont'd)

(8) Credit allowance for service interruption for Priority Restoration Maintenance and Administration shall be the same as for the Access Service with which it is associated as set forth in 2.4.4 preceding.

(9) Certain activities performed by the Telephone Company in association with the NSEP Service Vendor Handbook are included in the rate elements as follows:

(a) Priority Installation Invocation includes System Development, Verification, Confirmation and Preemption.

(b) Priority Restoration Level Implementation includes Administration, Maintenance of PR Service, System Development, Verification, Reconciliation, Confirmation and Preemption.

(c) Priority Restoration Level Change includes Verification and Confirmation.

10. Federal Government Specialized Service or Arrangements (Cont'd)

10.8 Service Offerings (Cont'd)

10.8.1 Type and Description (Cont'd)

(D) Telecommunications Service Priority (TSP) System (Cont'd)

(10) The customer, in obtaining a Restoration Priority, recognizes that quoting charges and obtaining permission to proceed with the restoration of certain Access Services will cause unnecessary delays.

In subscribing to Restoration Priority service the customer recognizes this condition and grants the Telephone Company the right to quote charges after the restoration has been completed.

(11) Customers that currently have Restoration Priority (RP) Service, as set forth in 13.3.2 following, will continue to receive priority service for a period up to 30 months during the TSP system phase in. At the end of 30 months from the effective date of this tariff, RP Service will be terminated and customers must submit request for TSP Service in accordance with instruction contained in the NSEP Service Vendor Handbook.

10. Federal Government Specialized Service or Arrangements (Cont'd)

10.8 Service Offerings (Cont'd)

10.8.1 Type and Description (Cont'd)

(E) Government Emergency Telecommunications Service (GETS)

(1) GETS is an emergency telecommunications service available to customers designated by an agency or branch of the Federal Government to transport National Security/Emergency Preparedness (NS/EP) originating and terminating access calls over the Public Switched Network (PSN). GETS uses existing features and services of the PSN with limited NS/EP augmentations and enhancements.

(2) The 710 Numbering Plan Area (NPA) code will be opened in all areas serviced by the Telephone Company. The 710 NPA call can be carried by the presubscribed inter-exchange carrier (IC) of the line in use or by the IC chosen by the user dialing a carrier access code. The IC designated by the Federal Government to provide GETS must purchase Switched Access Service in order to transport the GETS NS/EP access call. A GETS access minute will be rated as set forth in Section 6.7.6 preceding.

(3) Priority treatment for GETS traffic will be provide by exemption from restrictive network management control capabilities to aid completion of GETS calls in a congested network. This will provide NS/EP users with improved call completion capabilities over normal PSN users. Network Management service levels as set forth in 6.5.1 preceding, are applicable to a GETS NS/EP access call.

(This page filed under Transmittal No. 1)

10. Federal Government Specialized Service or Arrangements (Cont'd)

10.8 Service Offerings (Cont'd)

10.8.1 Type and Description (Cont'd)

(E) Government Emergency Telecommunications Service (GETS)

(4) The Telephone Company's 710 NPA code is available at each end office and access tandem. No calls will be handled by the Telephone Company operator. nor will there be information services for the 710 NPA. GETS NS/EP access minutes to a customer's network not designated to provide GETS will be administered by the Company the same as any other access minute. Billing disputes over Switched Access minutes as the result of the GETS NS/EP access call to a non-designated customer's network must be resolved with the appropriate agency or branch of the Federal Government.

(5) Alternate Carrier Routing (ACR) Feature

GETS Alternate Carrier Routing (ACR) is an advanced intelligent network feature and is available where facilities exist in suitably equipped end offices. The GETS ACR feature provides for the routing of the GETS universal access number to a sequence of GETS carriers. GETS ACR allows NS/EP end users to use the public switched network to provide enhanced call completion capability on calls made during times of national emergencies or disasters. GETS ACR provides alternate route capability on calls originated from lines served by end offices equipped with the GETS ACR feature to the GETS universal access number. When the presubscribed carrier is a participating GETS carrier, GETS ACR enables calls first to be routed for completion to the presubscribed carrier of the originating line. When the presubscribed carrier is not a participating GETS carrier, then an office selection table (Ranking Table) determines the GETS carrier. The Ranking Table contains three alternatives for a GETS carrier and is preselected on a per end office basis using data provided by the Federal Government or its integration contractor.

10. Federal Government Specialized Service or Arrangements (Cont'd)

10.8 Service Offerings (Cont'd)

10.8.1 Type and Description (Cont'd)

(E) Government Emergency Telecommunications Service (GETS) (Cont'd)

(5) Alternate Carrier Routing (ACR) Feature (Cont'd)

(A) Calling Party Number (CPN) Overlay Feature

Where technically feasible and facilities permit, the GETS Calling Party Number (CPN) Overlay feature is included with GETS ACR in suitably equipped GETS ACR and offices. The Federal Government or its integration contractor will determine the unique GETS CPN. The GETS CPN Overlay feature allows the network CPN information to be changed from the value of the actual calling party to a unique GETS number for all GETS ACR calls. The unique GETS CPN, not the actual calling party, is passed to the participating GETS carrier.

(B) Reports

There are two monthly reports available with GETS: Call Data Report and Service Control Point (SCP) Data Report.

(1) Call Data Report

The Call Data Report provides call detail associated with GETS ACR usage. The Call Data Report is populated using data from recordings of GETS calls.

(2) Service Control Point (SCP) Data Report

The SCP Data Report tabulates a count of the GETS carrier selection order list sent to the GETS ACR end offices for GETS calls that were processed. The report provides an aggregated total of each of the call categories by end office.

10. Federal Government Specialized Service or Arrangements (Cont'd)

10.8 Service Offerings (Cont'd)

10.8.1 Type and Description (Cont'd)

(E) Government Emergency Telecommunications Service (GETS) (Cont'd)

(5) Alternate Carrier Routing (ACR) Feature (Cont’d)

(C) Rate Elements

(1) Nonrecurring Charges

(a) GETS ACR Development Charge – Initial

A nonrecurring charge that applies to initial requests to recover the overall development of GETS ACR.

(b) GETS ACR Feature

A nonrecurring charge that applies per GETS ACR end office for the activation or deactivation of the GETS ACR Feature.

(c) GETS ACR Ranking Table Updates

A nonrecurring charge that applies per database update to modify the GETS ACR Ranking Table.

(2) Monthly Rates

(a) GETS ACR Feature

A monthly recurring charge per end office.

(b) GETS ACR Call Data Report

A monthly recurring charge for the production and distribution of the Call Data Report.

10. Federal Government Specialized Service or Arrangements (Cont'd)

10.8 Service Offerings (Cont'd)

10.8.1 Type and Description (Cont'd)

(E) Government Emergency Telecommunications Service (GETS) (Cont'd)

(5) Alternate Carrier Routing (ACR) Feature (Cont'd)

(C) Rate Elements (Cont'd)

(2) Monthly Rates (Cont'd)

(c) GETS ACR Service Control Point (SCP)Data Report

A monthly recurring charge for the production and distribution of the SCP Data Report.

(6) High Probability of Connection (HPC) Feature

(A) Description of Service

GETS HPC distinguishes the priority assigned to the call setup message in the Signaling System 7 (SS7) network. Setup messages associated with calls to 1-710-NCS-GETS would be sent with the highest priority. GETS HPC provides a trunk queuing feature in equipped switches which is invoked any time an Interexchange Carrier (IC) trunk group is busy. The queuing would only be applied to GETS calls and allows GETS users to dial an emergency call one time without having to redial. The call will automatically complete when the first available trunk becomes idle.

(B) GETS HPC Service Features

(1) GETS Call Recognition

This feature provides the capability to recognize originating GETS calls from an administratable screen on the called number. The screen will be set on 710 on all switches and on four 800/888 numbers which provide access to GETS on specified switches only. A call recognized as a GETS call is said to be an HPC marked call.

(This page filed under Transmittal No. 1)

10. Federal Government Specialized Services or Arrangements (Cont'd)

10.8 Service Offerings (Cont'd)

10.8.1 Type and Description (Cont'd)

(E) Government Emergency Telecommunications Service (GETS) (Cont'd)

(6) High Probability of Connection (HPC) (Cont'd)

(B) GETS HPC Service Features (Cont'd)

(2) Trunk Group Queuing (TQ)

This feature provides the capability to queue HPC marked calls to specific trunk groups within the routing chain. Only HPC marked calls are allowed to queue.

(3) Exemption From Network Management Controls (EX-MNMCs)

This feature provides HPC marked calls exemption from restrictive Network Management Controls.

(C) Reports

Operational Measurement (OM) Report

The Operational Measurement (OM) report provides periodic implementation status updates and ongoing service verification. The data format is in the form of a series of time stamped OM registers for each of the HPC equipped switches.

(D) GETS HPC Rate Elements

(1) Nonrecurring Charges

(a) GETS HPC Development Charge

A nonrecurring charge that applies to initial requests to recover the overall development of GETS HPC.

(b) GETS HPC Feature

A nonrecurring charge that applies GETS HPC end office for the activation or deactivation of the GETS HPC features.

(This page filed under Transmittal No. 1)

10. Federal Government Specialized Services or Arrangements (Cont'd)

10.8 Service Offerings (Cont'd)

10.8.1 Type and Description (Cont'd)

(F) Government Emergency Telecommunications Service (GETS) (Cont'd)

(6) High Probability of Connection (HPC) (Cont'd)

(D) GETS HPC Rate Elements (Cont'd)

(1) Nonrecurring Charges (Cont'd)

(c) GETS HPC Operational Measurement (OM) Report

A nonrecurring charge for HPC reports that provide specific data reflecting call progress per switch. The data format shall take the form of a series of time stamped OM registers associated with a switch Identifier.

(d) GETS HPC Remote Service Verification Program (RSVP)

A nonrecurring charge per switch for the initial establishment and any configuration change to RSVP numbers, such as PIC change or reorigination number.

(e) GETS HPC Service Change Charge

A nonrecurring charge per switch for GETS service configuration changes or disconnection. Includes HPC feature changes to the numbers provisioned to set HPC and Trunk Queuing parameters. The charge shall be independent of the number of activities included in an individual switch change request.

(2) Recurring Charges

(a) GETS HPC Feature

A monthly recurring charge that applies per HPC end office for the activation or deactivation of the GETS HPC features.

10. Federal Government Specialized Services or Arrangements (Cont'd)

10.8 Service Offerings (Cont'd)

10.8.1 Type and Description (Cont'd)

(F) Government Emergency Telecommunications Service (GETS) (Cont'd)

(6) High Probability of Connection (HPC) (Cont'd)

(D) GETS HPC Rate Elements (Cont'd)

(2) Recurring Charges (Cont'd)

(b) GETS HPC Operational Measurement (OM) Report

A monthly recurring charge associated with the provisioning of Operational Measurement reports that provide specific data reflecting call progress in HPC configured switches.

(c) GETS HPC Remote Service Verification Program Charge (RSVP)

A monthly recurring charge per switch associated with the provisioning of RSVP. Any interexchange carrier charges related to the interstate PIC, as billed by the interexchange carrier are also applicable.

(7) GETS Egress Queuing (EQ) (N)

(A) Description of Service

GETS EQ is a switch-based feature that provides priority call processing to calls designated as HPC that are terminating on a designated PBX trunk group. GETS EQ extends the functionality the existing GETS HPC feature to include two way and Primary Rate ISDN which connect a DMS to a PBX.

This feature is available on DMS100 switches with release NA012. (N)

10. Federal Government Specialized Services or Arrangements (Cont'd) (N)

10.8 Service Offerings (Cont'd)

10.8.1 Type and Description (Cont'd)

(F) Government Emergency Telecommunications Service (GETS) (Cont'd)

(7) GETS Egress Queuing (EQ)

(B) GETS EQ Rate Elements

(1) Nonrecurring Charges

(a) GETS EQ Service Preparation Charge

Nonrecurring charge for GETS EQ that will be charged for the initial service preparation.

(b) GETS EQ Charge Per Switch

Nonrecurring charge per switch for initial upgrades that will be charged for activation of the EQ feature in the DMS100 switches.

(2) Recurring Charges

GETS EQ Recurring Charge Per Switch

A monthly recurring charge that will be charged per switch for the GETS EQ Feature. (N)

10. Federal Government Specialized Service or Arrangements (Cont'd)

10.8 Service Offerings (Cont'd)

10.8.2 Rates and Charges

(A) Voice Grade Special Access Service

The provision of T-3 and G conditioned services contemplates station and tandem switching operations, using customer or end user provided equipment, as well as Special Access Service. Separate narrowband or voice grade services, where required by the customer or end user provided equipment or switching operation, are furnished in accordance with the applicable sections of this tariff.

Voice Grade Secure Communications	USOC	Monthly Rates	Non-recurring Charges	Termination Charges
Type I, each T-3 Conditioning,	GCA++	ICB rates and charges apply		
Additional Conditioning, per service termination	GTO++	ICB rates and charges apply		
Type II, each G-1 Conditioning,	GCB++	ICB rates and charges apply		
Type III, each G-2 Conditioning,	GCC++	ICB rates and charges apply		
Additional Conditioning, per service termination	G20++	ICB rates and charges apply		

(This page filed under Transmittal No. 1)

10. Federal Government Specialized Service or Arrangements (Cont'd)

10.8 Service Offerings (Cont'd)

10.8.2 Rates and Charges (Cont'd)

(A) Voice Grade Special Access Service (Cont'd)

Voice Grade Secure Communications	USOC	Monthly Rates	Non-recurring Charges	Termination Charges
Type IV, each G-3 Conditioning,	GCD++	ICB rates and charges apply		
Additional Conditioning, per service termination	G30++	ICB rates and charges apply		

(B) Wideband Digital Special Access Service

Voice Grade Secure Communications	USOC	Monthly Rates	Non-recurring Charges	Termination Charges
Type I, each	GW1++	ICB rates and charges apply		
Type II, each	GW2++	ICB rates and charges apply		
Type III, each	GW3++	ICB rates and charges apply		

(C) Special Routing Access Service

The following rates and charges are in addition to all other rates and charges that may be applicable for other services that may be furnished under the provisions of this tariff to operate in conjunction with this service:

	USOC	Rates	Nonrecurring Charges
(1) Special Routing Access Service Special Routing Plan Setup, per Switching System	GIB	-	$675.00

(This page filed under Transmittal No. 1)

10. Federal Government Specialized Service or Arrangements (Cont'd)

10.8 Service Offerings (Cont'd)

10.8.2 Rates and Charges (Cont'd)

(C) Special Routing Access Service (Cont'd)

	USOC	Rates	Nonrecurring Charges
(2) Special Routing Access Service Trunk Group Reconfiguration, per trunk	GIDAA/GID++	ICB rates and charges apply	
(3) Special Routing Access Service Trunk Group Setup, per End Office or Tandem Office Switching System, per occurrence			
- Customer Selection	GISAA/G1S++	ICB rates and charges apply	
(4) Special Routing Access Service Mode Selection (Active or Deactive), per Switching System, per occurrence	G1E	—	$521.00
(5) Special Routing Access Service Trunk Usage, when in an active mode, per trunk, per hour	G1T	$4.64*	—

* This rate is in addition to Trunk Side Premium Access Service rates, as set forth in 6. preceding, that apply on an ongoing basis regardless of the mode selected as set forth in (4) preceding.

(This page filed under Transmittal No. 1)

10. Federal Government Specialized Service or Arrangements (Cont'd)

10.8 Service Offerings (Cont'd)

10.8.2 Rates and Charges (Cont'd)

(C) Special Routing Access Service (Cont'd)

	USOC	Rates	Nonrecurring Charges
(6) Special Routing Access Service Maintenance and Administration per Switching System, per month	G1M	$6.32	-
(7) Special Routing Access Billing and Collection Services			
- Billing and Collection Services	*	*	*

* The rates and charges are those set forth by Nevada Bell under contract for Billing and Collection Services.

(This page filed under Transmittal No. 1)

10. Federal Government Specialized Service or Arrangements (Cont'd)

10.8 Service Offerings (Cont'd)

10.8.2 Rates and Charges (Cont'd)

(D) Telecommunications Service Priority (TSP) System

The following rates and charges are in addition to all other rates and charges that may be applicable for other services that may be furnished under the provisions of this tariff which operate in conjunction with the TSP System. This includes, but is not limited to, Maintenance of Service as set forth in 13.3.1 following.

	USOC	Monthly Rates	Nonrecurring Charges
(1) Priority Installation (PI) of an Access Service - Invocation includes System Development, Verification, Confirmation Preemption			
Prime Service Vendor	P1APC*	—	$50.00
Subcontractor	P1ASC*	—	$50.00
(a) Expedited (Emergency or Essential)	Regulations, rates and charges are the same as those set forth in 5.2.2(D) preceding for the Switched or Special Access Service for which PI is required.		

* When an Access Service is ordered with both PI and PR, the associated nonrecurring charge for PR applies.

(This page filed under Transmittal No. 1)

10. Federal Government Specialized Service or Arrangements (Cont'd)

10.8 Service Offerings (Cont'd)

10.8.2 Rates and Charges (Cont'd)

(D) Telecommunications Service Priority (TSP) System (Cont'd)

	USOC	Monthly Rates	Nonrecurring Charges	
(b) Utilizing Specially Constructed Facilities	Regulations, rates and charges are the same as those set forth in Pacific Bell Telephone Company's Tariff F.C.C. No. 2 for Special Construction of the facilities for Switched or Special Access Service for which PI is required.			(T) (T)
(2) Priority Restoration (PR) Level Implementation on an Access Service				
(a) When PR level is implemented - include Administrative and Maintenance of PR Service, System Development, Reconciliation, Confirmation, Verification and Preemption				

(This page filed under Transmittal No. 4)

10. Federal Government Specialized Service or Arrangements (Cont'd)

10.8 Service Offerings (Cont'd)

10.8.2 Rates and Charges (Cont'd)

(D) Telecommunications Service Priority (TSP) System (Cont'd)

	USOC	Monthly Rates	Nonrecurring Charges
Prime Service Vendor	PR5PC*	$5.00	$345.00
Subcontractor	PR5SC*	$5.00	$345.00
(b) When PR level is changed on an associated working Access Service			
Prime Service Vendor	PR8PC		$30.00
Subcontractor	PR8SC		$30.00

(This page filed under Transmittal No. 1)

ACCESS SERVICE

10. Federal Government Specialized Access Service or Arrangements (Cont'd)

10.8 Service Offerings (Cont'd)

10.8.2 Rates and Charges (Cont'd)

(E) Government Emergency Telecommunications Service (GETS)

	MONTHLY RATES	NONRECURRING CHARGES	
(1) GETS ACR Development Charge - Initial	None	$ 68,040.00	
(2) GETS ACR Feature Per End Office	$55.00	$ 1,290.00	
(3) GETS ACR Ranking Table Updates	None	$ 70.00	
(4) GETS ACR Call Data Report	$ 5.00	None	
(5) GETS ACR SCP Data Report	$ 5.00	None	
(6) GETS HPC Development Charge - Initial	None	$2,141,295.00	
(7) GETS HPC Features Per end office	$5.00	$958.00	
(8) GETS HPC OM Reports	$1,874.00	$106,509.00	
(9) GETS HPC Remote Service Verification Program Charge	$3.00	$6.00	
(10) GETS HPC Service Change Charge	None	$150.00	
(11) GETS EQ Service Preparation Charge	None	$3,122.61	(N)
(12) GETS EQ Charge Per Switch	None	$50.00	
(13) GETS EQ Recurring Charge Per Switch	$5.00	None	(N)

(This page filed under Transmittal No. 34)

ACCESS SERVICE

	Page No.	
11. SPECIAL FACILITIES ROUTING OF ACCESS SERVICES	11-2	
11.1 Description of Special Facilities Routing of Access Services	11-2	
11.1.1 Diversity	11-2	
11.1.2 Avoidance	11-2	
11.1.3 Cable-Only Facilities	11-2	
11.2 Rates and Charges for Special Facilities Routing of Access Service	11-3	
11.2.1 Diversity	11-3	
11.2.2 Avoidance	11-6	
11.2.3 Diversity and Avoidance Combined	11-6	
11.2.4 Cable-Only Facilities	11-6	(N)

(This page filed under Transmittal No. 1)

11. Special Facilities Routing of Access Services

11.1 Description of Special Facilities Routing of Access Services

The services provided under this tariff are provided over such routes and facilities as the Telephone Company may elect. Special Facilities Routing is involved, when, in order to comply with requirements specified by the customer, the Telephone Company provides Switched Access Service, Special Access Service or Special Federal Government Access Service in a manner which includes one or more of the following conditions:

11.1.1 Diversity

Two or more services must be provided over not more than two different physical routes.

11.1.2 Avoidance

A service must be provided on a route which avoids specified geographical locations.

11.1.3 Cable-Only Facilities

Certain Voice Grade services are provided on Cable-Only Facilities to meet the particular needs of a customer.

Service is provided subject to the availability of Cable-Only facilities. In the event of service failure, restoration will be made through the use of any available facilities as selected by the Telephone Company.

Avoidance and Diversity are available on Switched Access Service as set forth in 6. preceding; Narrowband, Voice Grade, Wideband Analog, and High Capacity Special Access Services as set forth in 7.2.1(A), 7.2.2, 7.2.6, and 7.2.9 preceding and Special Federal Government Access Services as set forth in 10.8 preceding. Cable-Only Facilities are available for Switched Access Service as set forth in 6. preceding; Voice Grade Special Access Services as set forth in 7.2.2 preceding and Special Federal Government Access Services as set forth in 10.8 preceding.

11. Special Facilities Routing of Access Services (Cont'd)

11.1 Description of Special Facilities Routing of Access Services (Cont'd)

In order to avoid the compromise of special routing information, the Telephone Company will provide the required routing information for each specially routed service to only the ordering customer. If requested by the customer, this information will be provided when service is installed and prior to any subsequent changes in routing.

The offering of Special Facilities Routing of Access Services contemplates the use of existing facilities. Should facilities not be available, it may be necessary to construct such facilities, either as (1) normal or (2) Special Construction. If Special Construction is involved, the regulations, as set in the Pacific Bell Telephone Company's Tariff F.C.C. No. 2, apply. (T) However, the applicable rates and charges shall be filed in this section of this tariff, not the Special Construction tariff. In either case of (1) or (2) preceding, the rates and charges for administration and any other specific items of cost directly attributable to the provision of this service shall be filed in this section also.

The rates and charges for Special Facilities Routing of Access Services as set forth in 11.2 following are in addition to all other rates and charges that may be applicable for services provided under other sections of this tariff.

11.2 Rates and Charges for Special Facilities Routing of Access Service

The rates and charges for Special Facilities Routing of Access Services are as follows:

11.2.1 Diversity

For each service provided in accordance with 11.1.1 preceding, the rates and charges will be developed on an individual case basis and filed following:

USOC

SYD

(This page filed under Transmittal No. 4)

11. Special Facilities Routing of Access Services (Cont'd)

11.2 Rates and Charges for Special Facilities Routing of Access Service (Cont'd)

11.2.1 Diversity (Cont'd)

Case No.

93-1 AT&T Communications

To provide route diversity for 1 DS-3 High Capacity Digital service between AT&T's Serving Wire Center RENONV02 and the Nevada Bell STEDNV11 central office.

	Monthly Rate	Nonrecurring Charge	USOC
DS-3 Diversity	$148.29	None	SYDAM

Case No.

93-3 MCI Telecommunications Corporation

To provide loop diversity for one DS1 High Capacity Digital Data circuit from RENONV13 to MCI's POP located at 200 South Virginia Street in Reno, Nevada.

	Monthly Rate	Nonrecurring Charge	USOC
Alternate SWC per DS1	$233.70	None	SYDAQ

Case No.

93-4 MCI Telecommunications Corporation

To provide loop diversity for one DS1 High Capacity Digital Data circuit from RENONV13 to the end user's premises at 601 South Rock Blvd., in Reno, Nevada.

	Monthly Rate	Nonrecurring Charge	USOC
Loop Diversity per DS1	$539.52	None	SYDAR

(This page filed under Transmittal No. 1)

11. Special Facilities Routing of Access Services (Cont'd)

11.2 Rates and Charges for Special Facilities Routing of Access Service (Cont'd)

11.2.1 Diversity (Cont'd)

Case No.

95–1 AT&T Communications

To provide loop diversity for DS1 High Capacity Digital Data Service between the Nevada Bell RENONV02 central office and the end user's premises at 1055 South Wells Avenue in Reno, Nevada.

	Monthly Rate	Nonrecurring Charge	USOC
Loop Diversity, First DS1	$16.05	$10,841.00	SYDAS
Loop Diversity, second to tenth DS1, each	$16.05	None	SYDAT

11. Special Facilities Routing of Access Services (Cont'd)

11.2 Rates and Charges for Special Facilities Routing of Access Service (Cont'd)

11.2.2 Avoidance

For each service provided in accordance with 11.1.2 preceding, the rates and charges will be developed on an individual case basis and filed following:

USOC
SYA

11.2.3 Diversity and Avoidance Combined

For each service provided in accordance with 11.1.1 and 11.1.2 preceding, combined, the rates and charges will be developed on an individual case basis and filed following:

USOC
SYB

Case No.

93-2 MCI Telecommunications Corporation

To provide route diversity and avoidance of a specific wire center for two 56kbps SS7 Links between MCI's POP located at 200 South Virginia Street and the Nevada Bell central office located at 3350 Lymbery (RENONV13), Reno, Nevada.

	Monthly Rate	Nonrecurring Charge	USOC
First SS7 Link	$207.32	$1,500.00	SYBAA
Additional Link	$207.32	None	SYBAB

11.2.4 Cable-Only Facilities

For each service provided in accordance with 11.1.3 preceding, the rates and charges will be developed on an individual case basis and filed following:

USOC
SYC

(This page filed under Transmittal No. 1)

	Page No.	
12. SPECIALIZED SERVICE OR ARRANGEMENTS	12-2	
12.1 General	12-2	
12.2 Move Charges	12-2	
12.3 Rates and Charges	12-3	(N)

(This page filed under Transmittal No. 1)

12. Specialized Service Or Arrangement

12.1 General

Specialized Service or Arrangements may be provided by the Telephone Company, at the request of a customer, on an individual case basis if such service or arrangements meet the following criteria:

(A) The requested service or arrangements are not offered under other sections of this tariff.

(B) The facilities utilized to provide the requested service or arrangements are of a type normally used by the Telephone Company in furnishing its other services.

(C) The requested service or arrangements are provided within a LATA.

(D) The requested service or arrangements are compatible with other Telephone Company services, facilities, and its engineering and maintenance practices.

(E) This offering is subject to the availability of the necessary Telephone Company personnel and capital resources.

12.2 Move Charges

(A) When service without a maximum termination liability charge associated with it is moved to a different building, the nonrecurring charge applies; when moved to a new location in the same building, a charge of one-half the nonrecurring charge applies.

(B) When service with a maximum termination liability charge associated with it is moved and is reinstalled at a new location, the customer may elect:

- to pay the unexpired portion of the maximum termination liability charge for the service, if any, with the application of a nonrecurring charge and the establishment of a new maximum termination liability charge for such service at the new location, or

12. Specialized Service Or Arrangement

12.2 Move Charges (Cont'd)

(B) (Cont'd)

- to continue service subject to the unexpired portion of the maximum termination liability charge, if any, and pay the estimated costs of moving such service, provided that the customer requests these charges be quoted prior to ordering the service move. Charges for moving such service will be based on estimated costs attributable to the move.

Move charges include the estimated costs of removal, restoration of services or facilities necessitated by the move, transportation, storage, reinstallation, engineering, labor, supervision, materials, administration, and any other specific items of cost directly attributable to the move.

12.3 Rates and Charges

Rates and charges, and additional regulations, if applicable, for specialized services or arrangements provided on an individual case basis are filed following:

Case No.

86-1 U.S. Sprint Communications Company
(SSE No. IEC-2)

Specialized Transmission System consisting of four single mode optical fibers between the customer's location, on the east side of North Virginia Street, 658 feet north of its intersection with Talus Way, and the Telephone Company location at 100 North Center Street, both in Reno Nevada Exchange. At the Telephone Company location, the system includes one Nippon Electric Corp. 560 Megabit per second optical line terminating multiplexer, with one-for-one automatic protection switching and associated equipment,

(This page filed under Transmittal No. 1)

12. Specialized Service Or Arrangement (Cont'd)

12.3 Rates and Charges (Cont'd)

Case No. (Cont'd)

86-1 U.S. Sprint Communications Company
(SSE No. IEC-2) (Cont'd)

to provide the first of up to twelve 45 Megabit per second DS-3 level bit streams, each comprising 28 1.544 Megabit per second DS-1 level bit streams and terminating on a DSX-1 cross-connect frame. At the customer's location, the system's fibers will terminate on biconical connectors housed in a fiber termination panel (point of interface) provided by Telephone Company.

The customer will provide a matching Nippon Electric Corp. 560 Megabit per second optical line terminating multiplexer on its premises.

	Monthly Rate	Nonrecurring Charge	USOC
Specialized Transmission System, equipped for the first DS-3 bit stream and group of 28 DS-1 channels			
- Per System	$7,950.00	$26,000.00	WZZND
Additional DS-3 bit stream and group at 28 DS-1 channels			
- Per System	$1,000.00	$7,400.00	WZZNE

(This page filed under Transmittal No. 1)

12. Specialized Service Or Arrangement (Cont'd)

12.3 Rates and Charges (Cont'd)

Case No. (Cont'd)

86-1 U.S. Sprint Communications Company
(SSE No. IEC-2) (Cont'd)

Special Conditions

(1) The preceding rates and charges are in addition to all other applicable rates and charges for any Switched or Special Access Services ordered from the Telephone Company and provided over or in conjunction with this Specialized Transmission System, or additional DS-3 bit streams, subject to the conditions of set forth in 7.2.7 preceding and Special Condition (8) following. This Specialized Transmission System and any associated, additional DS-3 level bit streams will each be considered a Digital High Capacity Service and the Telephone Company location will be considered a HUB for purposes of applying the conditions of set forth in 7.2.7 preceding.

(2) Title to all systems, facilities and equipment used to provide these services will be retained by the Telephone Company in accordance with the applicable provisions of this tariff.

(3) These services are offered to provide a maximum aggregate line transmission speed of 560 Megabits per second. Any transmission speed in excess of 560 Megabits will constitute a different speed offering and different rates and charges will apply.

(4) The use of these services may not be assigned or transferred except in accordance with the applicable provisions of this tariff.

12. Specialized Service Or Arrangement (Cont'd)

12.3 Rates and Charges (Cont'd)

Case No. (Cont'd)

86-1 U.S. Sprint Communications Company (SSE No. IEC-2) (Cont'd)

Special Conditions (Cont'd)

(5) Repair of these services will be governed by existing tariffs and statutes on priorities of repair. The Telephone Company and the customer will execute a specific maintenance agreement, before the services are installed, which will address each party's maintenance responsibilities, trouble reporting procedures, release of services for testing, trouble sectionalization and isolation and specific test and test sequences.

(6) Compatibility between Telephone Company provided and customer provided network transmission equipment will be the responsibility of the customer, except that the Telephone Company provided optical line terminating multiplexer and associated protection switching equipment will be Nippon Electric Corp. in type as agreed upon with the customer.

(7) If the customer requests the Telephone Company to rearrange or redesign this Specialized Transmission System, an additional monthly rate and/or nonrecurring charge will apply and be developed by the Telephone Company on an individual case basis.

12. Specialized Service Or Arrangement (Cont'd)

12.3 Rates and Charges (Cont'd)

Case No. (Cont'd)

86-1 U.S. Sprint Communications Company (SSE No. IEC-2) (Cont'd)

Special Conditions (Cont'd)

(8) As each individual voice grade equivalent channel (capacity of 672 per DS-3 level, 45 Megabit per second bit stream) is activated for Switched Access Service, the monthly rate for this Specialized Transmission System and or additional DS-3 level bit streams will individually be reduced by 1/672nd. This condition applies only to Switched Access Service voice grade equivalent channels entering this Specialized Transmission System, or additional DS-3 level bit streams, as a digital pulse code modulated, DS-0 level, 64 Kilobit per second bit stream.

12. Specialized Service Or Arrangement (Cont'd)

12.3 Rates and Charges (Cont'd)

Case No. (Cont'd)

97-1 LDDS WORLDCOM
(SSE NO. 97-1)

Specialized Transmission System consisting of 4 single mode optical fibers between the customer's location, 2301 E 4th St., Reno, MH #67, and the Telephone Company location at 100 North Center Street, both in Reno Nevada Exchange. At the Telephone Company location, the system consists of one Digital Electric Corp. Optical Carrier 12 System terminal, with automatic protection switching, and associated equipment to provide the first of up to twelve 45 Mbps. DS-3 level bit streams. At the customer's location, the system's fibers will terminate on a Digital Electric Corp. Optical Carrier 48 system.

	Monthly Rate	Nonrecurring Charge	USOC
Specialized Transmission System, equipped for the first DS-3 bit stream			
o Per System	$3,500.00		WZZ4A
Additional DS-3 bit stream			
o Per System	350.00		WZZ4B

(This page filed under Transmittal No. 1)

12. Specialized Service Or Arrangement (Cont'd)

12.3 Rates and Charges (Cont'd)

Case No. (Cont'd)

97-1 LDDS WORLDCOM (Cont'd)
(SSE NO. 97-1)

Special Conditions

(1) The preceding rates and charges are in addition to all other applicable rates and charges for any Switched or Special Access Services ordered from the Telephone Company and provided over or in conjunction with this Specialized Transmission System, or additional DS-3 bit streams, subject to the conditions set forth in 7.2.7 preceding. This Specialized Transmission System and any associated, additional DS-3 level bit streams will each be considered a Digital High Capacity Service and the Telephone Company location will be considered a HUB for purposes of applying the conditions set forth in 7.2.7 preceding.

(2) Title to all systems, facilities and equipment used to provide these services will be retained by the Telephone Company in accordance with the applicable provisions of this tariff.

(3) These services are offered to provide a maximum aggregate line transmission speed of OC12. Any transmission speed in excess of OC12 will constitute a different offering and different rates and charges will apply.

(4) The use of these services may not be assigned or transferred except in accordance with the applicable provisions of this tariff.

(This page filed under Transmittal No. 1)

12. Specialized Service Or Arrangement (Cont'd)

12.3 Rates and Charges (Cont'd)

Case No. (Cont'd)

97-1 LDDS WORLDCOM (Cont'd)
(SSE NO. 97-1)

Special Conditions (Cont'd)

(5) Repair of these services will be governed by existing tariffs and statutes or priorities of repair. The Telephone Company and the customer will execute a specific maintenance agreement, before the services are installed which will address each party's maintenance responsibilities, trouble reporting procedures, release of services for testing, trouble sectionalization and isolation and specific test and test sequences.

(6) If the customer requests the Telephone Company to rearrange or redesign this Specialized Transmission System, an additional monthly rate and/or nonrecurring charge will apply and be developed by the Telephone Company on an individual case basis.

(7) The rate for the service under this arrangement will be stable during the minimum service period and will not be subject to utility initiated increase during said period. These rates will be subject to changes only at the direction of the Federal Communications Commission.

(8) A termination charge equal to the present value of the monthly rate over the number of months remaining in the minimum service period, as of the date of disconnection using an 11.25% per annum rate, will apply if service is terminated prior to the expiration of the minimum service period.

12. Specialized Service Or Arrangement (Cont'd)

12.3 Rates and Charges (Cont'd)

Case No. (Cont'd)

98-INV-00008
Frontier Communications

Description	Monthly Rate	Nonrecurring Charge
This request provides for two (2) 1.544 Mbps services cross-connected in the Reno, Nevada Central Office (RENONV02K12).		$ 664.00
Case Preparation Charge		$1,850.00

98-PE3547
AT&T

Description	Monthly Rate	Nonrecurring Charge
This request provides for a dedicated OC-3 ring between the AT&T POP (RENONV03) and the end user premise at 11111 Stead Blvd., Reno, NV. It also includes an alternate POP serving wire center (RENONV12) and provides for a new entrance to the POP. The ring will be initially equipped to provide one 44.736 Mbps circuit and twenty-eight 1.554 Mbps circuits.	$12,300.00	$45,780.00
Activation of remaining twenty-eight 1.554 Mbps circuits	$ 820.00	$ 3,900.00

1) This service has a minimum contract service period of three years. A termination charge equal to the monthly rate times the number of months (or fraction thereof) remaining in the minimum service period will apply if service is terminated prior to the expiration of the minimum service period.

2) In the event this service becomes the subject of a general tariff offering, AT&T shall be required to either terminate the service or convert the service to the general tariff offering at the rates, terms, and conditions provided there under. No termination charges shall apply in either instance.

(This page filed under Transmittal No. 1)

ACCESS SERVICE

12. Specialized Service or Arrangements (Cont'd)

12.3 Rates and Charges (Cont'd)

Case No.	Customer Name	Volume Tier*	Monthly Rate for each Active Port
00-SBC-1	MCI WorldCom Network Services,Inc.	1 - 200,000	$12.00

Description

Remote Access Service (RAS) provides an ISDN PRI-based data transport service that supports MCI WorldCom Network Services, Inc. with medium to high speed transport capabilities for end user remote dial access to MCI WorldCom Network Services, Inc.'s internet network. RAS terminates in network access servers in Nevada Bell Telephone Company's central offices, which provide modem functionality. The connections between the central office and MCI WorldCom Network Services, Inc.'s network are not part of RAS. MCI WorldCom Network Services, Inc. will acquire these services separately.

MCI WorldCom Network Services, Inc. agrees to maintain a minimum of 148,800 active ports each month beginning March 27, 2003. MCI WorldCom Network Services, Inc. agrees to pay a monthly rate on a per port basis as outlined in the volume tier listed above. The volume tier is an aggregation of ports ordered by MCI WorldCom Network Services, Inc. through the tariffs and in the territories of Southwestern Bell Telephone Company, Pacific Bell Telephone Company, The Southern New England Telephone Company, Ameritech Operating Companies, and Nevada Bell Telephone Company (hereinafter referred to as The Telephone Companies). In the event that MCI WorldCom Network Services, Inc. does not have 148,800 active ports during a given month after March 27, 2003, MCI WorldCom Network Services, Inc. agrees to pay The Telephone Companies the monthly rate for 148,800 ports in each such month regardless of the actual number of active ports. This modified arrangement shall expire as of the end of month twenty four (24) from March 27, 2003 and is limited to 200,000 ports. (C)

1. In the event this service becomes the subject of a general tariff service offering, MCI WorldCom Network Services, Inc. shall be required to either terminate the service or convert the service to the general tariff offering at the rates, terms and conditions provided thereunder; No termination charges shall apply in either instance.

2. The rate and the terms and conditions of this subsection will not change during the term period of this specialized arrangement, unless noted herein or required by the F.C.C. All other tariff changes will apply accordingly.

* Number of Active and Ordered Ports

(This page filed under Transmittal No. 42)

	Page No.	
13. ADDITIONAL ENGINEERING, ADDITIONAL LABOR AND MISCELLANEOUS SERVICES	13-2	
13.1 Additional Engineering	13-2	
13.1.1 Charges for Additional Engineering	13-4	
13.2 Additional Labor	13-4	
13.2.1 Overtime Installation	13-4	
13.2.2 Overtime Repair	13-5	
13.2.3 Standby	13-5	
13.2.4 Testing and Maintenance with Other Telephone Companies	13-5	
13.2.5 Other Labor	13-5	
13.2.6 Charges for Additional Labor	13-6	
13.3 Miscellaneous Services	13-9	
13.3.1 Maintenance of Service	13-9	
13.3.2 Restoration Priority	13-11	
13.3.3 Presubscription	13-12	
13.3.4 Standard Jacks – Registration Program	13-25	
13.3.5 Testing Services	13-34	
13.3.6 Provision of Access Service Billing Information	13-47	
13.3.7 Miscellaneous Equipment	13-49	
13.3.8 International Blocking Service	13-50	
13.3.9 900 Call Blocking	13-51	
13.3.10 Optional Features associated with Pay Telephone Service	13-54	(N)

(This page filed under Transmittal No. 1)

13. Additional Engineering, Additional Labor and Miscellaneous Services

In this section normally scheduled working hours are an employee's scheduled work period in any given calendar day (e.g., 7:00 a.m. to 4:00 p.m.) for the application of rates based on working hours. A Miscellaneous Service Order Charge applies to any service, or combination of services ordered simultaneously from this section of the Tariff for which a service order is not already pending (with the exception of Presubscription (13.3.3) which does not have the charge applied). The Miscellaneous Service Order Charge is an administrative charge designed to compensate for the expenses associated with service order issuance.

The charge always applies to the following services since a pending service order would not exist: Overtime Repair (13.2.2), Standby Repair (13.2.3), Testing and Maintenance with Other Telephone Companies other than when in conjunction with Acceptance Testing (13.2.4), Other Labor (13.2.5) and Maintenance of Service (13.3.1). The Miscellaneous Service Order Charge will also apply to the following services if they are ordered subsequent to the initial installation of the associated access service, thereby necessitating the issuance of another service order: Restoration Priority (13.3.2), Standard Jacks (13.3.4), Controller Arrangement [13.3.7(A)]., and International Aggregator Blocking Service [13.3.8(B)].

The charge does not apply to the following services since there would exist a pending service order: Additional Engineering (13.1), Overtime Installation (13.2.1), Standby Acceptance Testing (13.2.3), Testing and Maintenance with Other Telephone Companies when in conjunction with Acceptance Testing (13.2.4), and Additional Cooperative Acceptance Testing [13.3.5(A)(1) and 13.3.5(B)(1)]. This charge is a follows:

	USOC	Rate
- Miscellaneous Service Order Charge, per occurrence	MSSOC	$121.77

(This page filed under Transmittal No. 1)

13. Additional Engineering, Additional Labor and Miscellaneous Services (Cont'd)

13.1 Additional Engineering

Additional Engineering will be provided by the Telephone Company at the request of the customer only when:

(A) A customer requests additional technical information after the Telephone Company has already provided the technical information normally included on the Design Layout Report (DLR) as set forth in 6.1.4 and 7.1.6 preceding.

(B) Additional engineering time is incurred by the Telephone Company to engineer a customer's request for a customized service as set forth in 7.1.1 preceding.

(C) A customer requests a Design Change, additional engineering time isincurred by the Telephone Company for the engineering review as set forth in 5.2.2(C). The charge for additional engineering will apply whether or not the customer authorizes the Telephone Company to proceed with the design change.

(D) A customer requests additional Points of Termination as set forth in 2.1.5(A) preceding.

The Telephone Company will notify the customer that additional engineering charges, as set forth in 13.1.1 following, will apply before any additional engineering is undertaken.

13. Additional Engineering, Additional Labor and Miscellaneous Services (Cont'd)

13.1 Additional Engineering (Cont'd)

13.1.1 Charges For Additional Engineering

The charges for additional engineering are as follows:

	Additional Engineering Periods	USOC	Each Half Hour or Fraction Thereof
(A)	Basic Time, normally scheduled working hours, per engineer	AEHNF/AEH++	$42.94
(B)	Overtime, outside of normally scheduled working hours, per engineer	AEHXF/AEH++	$64.40

13.2 Additional Labor

Additional labor is that labor requested by the customer on a given service and agreed to by the Telephone Company as set forth in 13.2.1 through 13.2.5 following. The Telephone Company will notify the customer that additional labor charges as set forth in 13.2.6 following will apply before any additional labor is undertaken.

13.2.1 Overtime Installation

Overtime installation is that Telephone Company installation effort outside of normally scheduled working hours

(This page filed under Transmittal No. 1)

13. Additional Engineering, Additional Labor and Miscellaneous Services (Cont'd)

13.2 Additional Labor (Cont'd)

13.2.2 Overtime Repair

Overtime repair is that Telephone Company maintenance effort performed outside of normally scheduled working hours.

13.2.3 Stand by

Stand by includes all time in excess of one-half (1/2) hour during which Telephone Company personnel stand by to make installation acceptance tests or cooperative tests with a customer to verify facility repair on a given service.

13.2.4 Testing and Maintenance with Other Telephone Companies

Additional testing, maintenance or repair of facilities which connect to facilities of other telephone companies, is that which is in addition to normal effort required to test, maintain or repair facilities provided solely by the Telephone Company.

13.2.5 Other Labor

Other labor is that additional labor not included in 13.2.1 through 13.2.4 preceding and labor incurred to accommodate a specific customer request that involves only labor which is not covered by any other section of this tariff.

13. Additional Engineering, Additional Labor and Miscellaneous Services (Cont'd)

13.2 Additional Labor (Cont'd)

13.2.6 Charges for Additional Labor

The charges for additional labor are as follows:

Additional Labor Periods	USOC	Each Half Hour or Fraction Thereof
(A) Installation or Repair		
- Overtime, outside of normally scheduled working hours on a scheduled work day, per technician	ALHXF/ALH++	$60.32*
- Premium Time, outside of scheduled work day, per technician	ALHPF/ALH++	$80.42*

* A call-out of a Telephone Company employee at a time not consecutive with the employee's scheduled work period is subject to a minimum charge of four hours.

(This page filed under Transmittal No. 1)

13. Additional Engineering, Additional Labor and Miscellaneous Services (Cont'd)

13.2 Additional Labor (Cont'd)

13.2.6 Charges for Additional Labor (Cont'd)

Additional Labor Periods	USOC	Each Half Hour or Fraction Thereof
(B) Stand by		
- Basic time, normally scheduled working hours, per technician	ALTNF/ALT++	$40.21*
- Overtime, outside of normally scheduled working hours on a scheduled work day, per technician	ALTXF/ALT++	$60.32*
- Premium Time, outside of scheduled work day, per technician	ALTPF/ALT++	$80.42*

* A call-out of a Telephone Company employee at a time not consecutive with the employee's scheduled work period is subject to a minimum charge of four hours.

(This page filed under Transmittal No. 1)

13. Additional Engineering, Additional Labor and Miscellaneous Services (Cont'd)

13.2 Additional Labor (Cont'd)

13.2.6 Charges for Additional Labor (Cont'd)

The charges for additional labor are as follows:

	Additional Labor Periods		Each Half Hour or Fraction Thereof	
	USOC	Installation and Repair Technician	USOC	Central Office Maintenance Technician
(C) Testing and Maintenance with other Telephone Companies, or Other Labor				
- Basic Time, normally scheduled working hours, per technician	ALKNR/ALK++	$40.21	ALKNM	$32.72
- Overtime, outside of normally working scheduled hours on as scheduled work day, per technician	ALKXR/ALK++	$60.00*(R)	ALKXM	$45.00*(R)
- Premium Time, outside of scheduled work day, per technician	ALKPR/ALK++	$75.00*(R)	ALKPM	$65.00*(R)

* A call-out of a Telephone Company employee at a time not consecutive with the employee's scheduled work period is subject to a minimum charge of four hours.

Rates contained in this transmittal are subject to subsequent adjustment, effective retrospectively, in the event the Commission or a court subsequently authorizes Nevada to correct its rates pursuant to pending motions, or petitions for reconsideration or waiver, or in the event of any other adjustment to an order of the Commission or a court.

(This page filed under Transmittal No. 44)

13. Additional Engineering, Additional Labor and Miscellaneous Services (Cont'd)

13.3 Miscellaneous Services

13.3.1 Maintenance of Service

(A) When a customer reports a trouble to the Telephone Company for clearance and no trouble is found in the Telephone Company's facilities, the customer shall be responsible for payment of a Maintenance of Service charge for the period of time from when Telephone Company personnel are dispatched to the customer designated premises to when the work is completed. Failure of Telephone Company personnel to find trouble in Telephone Company facilities will result in no charge if the trouble is actually in those facilities, but not discovered at the time.

(B) The customer shall be responsible for payment of a Maintenance of Service charge when the Telephone Company dispatches personnel to the customer designated premises, and the trouble is in equipment or communications systems provided by other than the Telephone Company or in detariffed CPE provided by the Telephone Company.

In either (A) or (B) preceding, no credit allowance will be applicable for the interruption involved if the Maintenance of Service Charge applies.

13. Additional Engineering, Additional Labor and Miscellaneous Services (Cont'd)

13.3 Miscellaneous Services (Cont'd)

13.3.1 Maintenance of Service (Cont'd)

(C) The charges for Maintenance of Service are as follows:

Maintenance of Service Periods	USOC	Installation and Repair Technician (Each Half Hour or Fraction Thereof)	USOC	Central Office Maintenance Technician (Each Half Hour or Fraction Thereof)	
- Basic Time, normally scheduled working hours, per technician	MVVNR/MVV++	$40.21	MVVNM	$32.72	
- Overtime, outside of normally working scheduled hours on as scheduled work day, per technician	MVVPR/MVV++	$60.32*	MVVPM	$49.08*	
- Premium Time, outside of scheduled work day, per technician	MVVXR/MVV++	$80.42*	MVVXM	$65.43*	(T)

* A call-out of a Telephone Company employee at a time not consecutive with the employee's scheduled work period is subject to a minimum charge of four hours.

(This page filed under Transmittal No. 4)

13. Additional Engineering, Additional Labor and Miscellaneous Services (Cont'd)

13.3 Miscellaneous Services (Cont'd)

13.3.2 Restoration Priority

Existing Restoration Priority (RP) was superceded by Telecommunications Service Priority (TSP), as specified in Section 10.8.1(D), preceding, on September 10, 1990. Existing RP arrangements for Special Access Services will remain in effect for thirty (30) months until March 10, 1993. If RP Service is converted to TSP, the customer will incur the Priority Restoration Level Implementation Nonrecurring Charge as specified in 10.8.2(D)(2)(a), preceding.

13. Additional Engineering, Additional Labor and Miscellaneous Services

13.3 Miscellaneous Services (Cont'd)

13.3.3 Presubscription

(A) Description

Presubscription is a procedure whereby an end user or an agent representing pay telephones may select and designate to the Telephone Company as IC to access, without an access code, interLATA, interstate calls. This IC is referred to as the end user's or agent's primary IC.

An end user or agent is the person identified in the account as responsible for payment of the account or any person contractually or otherwise lawfully authorized to change telecommunications services and/or represent the end user or agent.

The Presubscription procedures applies to Telephone Exchange Service lines and/or trunks, Access Line Arrangements, Feature Group A lines and Centrex lines. It also applies to pay telephones served by end offices converting to equal access on or after April 1, 1989.

13. Additional Engineering, Additional Labor and Miscellaneous Services

13.3 Miscellaneous Services (Cont'd)

13.3.3 Presubscription (Cont’d)

(B) Provisions

Presubscription of residence and business lines and/or trunks is furnished in accordance with the detailed provisions of the Federal Communications Commission's Allocation Plan as set forth in Appendix B of its Memorandum Opinion and Order in CC Docket No. 83-1145, Phase I, adopted May 31, 1985, and released June 12, 1985. Principle provisions of the Allocation Plan and associated Telephone Company provisions follow.

13. Additional Engineering, Additional Labor and Miscellaneous Services

13.3 Miscellaneous Services (Cont'd)

13.3.3 Presubscription (Cont'd)

(B) Provisions (Cont'd)

Presubscription of pay telephones will follow the detailed provisions of the Federal Communications Commission's Allocation Plan as set forth above, except the six-month notification provided to interexchange carriers of end offices converting to equal access prior to April 1, 1989.

(1) End User/Agent Notification

End User and Agent Notification, Equal Access Balloting Process and Interexchange Carrier End User Lists.

The Telephone Company will notify end users and agents of the availability of equal access (Access Trunk Arrangement 101XXXX or Feature Group D) by mailing an Equal Access Ballot. The mailing of the initial ballots will occur approximately 90 days, but in no case later than 85 days, prior to the conversion of the end office serving the end users and agents. End Users and agents will be required to return their respective ballot to the Telephone Company or the selected primary IC within 30 days of its receipt.

13. Additional Engineering, Additional Labor and Miscellaneous Services

13.3 Miscellaneous Services (Cont'd)

13.3.3 Presubscription (Cont'd)

(B) Provisions (Cont'd)

(1) End User/Agent Notification (Cont'd)

An IC obtaining service commitments directly from end users and agents of pay telephones must provide an IC End User/Agent List to the Telephone Company accompanied by a document affirming that it hasrequested an user or agent signed statements containing the required information or a ballot for each end user and agent on the list.

Approximately 50 days prior to a serving end office conversion to equal access, end users or agents who have not made a primary IC selection, either through the Equal Access Ballot or directly with an IC, will be sent a second ballot by the Telephone Company.

13. Additional Engineering, Additional Labor and Miscellaneous Services

13.3 Miscellaneous Services (Cont'd)

13.3.3 Presubscription (Cont'd)

(B) Provisions (Cont'd)

(2) Allocation Process for Presubscription

The Telephone Company will tabulate the initial ballots and the IC end user/agent lists received and determine the percentage of end users or agents that selected each IC. ICs participating in the allocation process will have nonpresubscribing end users or agents assigned, at random, in proportion to the results of the first ballot response for a particular serving end office.

Should an IC listed on the initial ballot elect not to participate in the allocation process, the nonresponding end user's or agent's lines will be proportion to their initial results.

Separate allocations processes will be used for Residence, Business, and Pay Telephone lines.

(3) End User/Agent Choice Discrepancy with Presubscription

When a discrepancy is determined regarding an end user’s or agent’s designation of a primary IC, the following applies depending upon the situation described:

13. Additional Engineering, Additional Labor and Miscellaneous Services (Cont'd)

13.3 Miscellaneous Services (Cont'd)

13.3.3 Presubscription (Cont'd)

(B) Provisions (Cont'd)

(3) End Use/Agent Choice Discrepancy with Presubscription (Cont'd)

- When an end user or agent indicates more than one IC selection on the return notification or returns an illegible return notification, the Telephone Company will contact the end user or agent for clarification. If the end user or agent notification that does not match with information provided by an IC and both notifications indicate the same authorization date, the end user's or agent's notification takes precedence and the Telephone Company will process the user's or agent's selection.

- In the event that two or more ICs provide to the Telephone Company notifications with the same authorization date(s) and neither notification has been processed, the Telephone Company will contact the end user or agent for clarification. A list of these customers in conflict will be sent to the affected IC by the Telephone Company.

13. Additional Engineering, Additional Labor and Miscellaneous Services

13.3 Miscellaneous Services (Cont'd)

13.3.3 Presubscription (Cont'd)

(B) Provisions (Cont'd)

(3) End Use/Agent Choice Discrepancy with Presubscription (Cont'd)

- In the event that two or more ICs have provided to the Telephone Company notifications with the same authorization date(s), and one IC notification has already been processed by the Telephone Company, those IC notification not yet processes would be returned to the IC.

- New end users or agents who are served by end offices equipped with ATAXXX or FGD will be asked to presubscribe to an IC at the time they place on order with the Telephone Company for telephone service. They may select either of the following options. There will be no charge for this initial selection.

  - designate a primary IC for all of its lines.

  - designate a different IC for each of its lines.

  Subsequent to the installation of telephone service and after the end user's or agent's initial selection of a predesignated IC for any change in selection, a nonrecurring charges, as set forth 13.3.3 (B)(4)(e) in following will apply.

(4)

13. Additional Engineering, Additional Labor and Miscellaneous Services

13.3 Miscellaneous Services (Cont'd)

13.3.3 Presubscription (Cont'd)

(B) Provisions (Cont'd)

(5) Initial or Change Charge Application

End users or agents making their initial primary or subsequent IC selection, either by returning the ballot to the Telephone Company or by contacting an IC directly during the 90 day period prior to the equal access conversion date are not subject to a charge.

Any allocation end user or agent, as set forth in (2) preceding, may select a new primary IC even after the allocation has taken place. No charge will apply if the section occurs within the six (6) months after the end office equal access conversion date.

13. Additional Engineering, Additional Labor and Miscellaneous Services

13.3 Miscellaneous Services (Cont'd)

13.3.3 Presubscription (Cont'd)

(B) Provisions (Cont'd)

(5) Initial or Change Charge Application (Cont’d)

(a)

(b)

(c) New End Users/Agents, who request service in an end office equipped with equal access, will be asked to select a primary IC at the time they place an order with the Telephone Company for Telephone Exchange Services, Feature Group A Switched Access Services, or pay telephone service. New end users or agents will be sent

13. Additional Engineering, Additional Labor and Miscellaneous Services

13.3 Miscellaneous Services (Cont'd)

13.3.3 Presubscription (Cont'd)

(B) Provisions (Cont'd)

(5) Initial or Change Charge Application (Cont'd)

(c) (Cont'd)

an informational package, upon request, to aid their selection of a primary IC. They may select either of the following options. There will be no additional charge for this selection.

- Designate an IC as primary IC and Dial 101XXXX or other access codes (i.e., 950-0XXX or 950-1XXX) to reach services of the same IC or to reach other ICs.

- Designate that they do not want to be presubscribed to any IC and choose to dial 101XXXX or other access codes (i.e., 950-0XXX or 950-1XXX) for all calls to all ICs.*

*This option is not available to pay telephones.

(This page filed under Transmittal No. 1)

13. Additional Engineering, Additional Labor and Miscellaneous Services

13.3 Miscellaneous Services (Cont'd)

13.3.3 Presubscription (Cont'd)

(B) Provisions (Cont'd)

(5) Initial or Change Charge Application (Cont'd)

(c) (Cont'd)

Should new end users or agents return confirmation notices identifying primary ICs different form those given verbally, the Telephone Company will process such written selections without charges.

After the End User's/Agents initial primary IC selection, for any charge thereafter, a nonrecurring charges, as set forth in 13.3.3(B)(4)(e) following, applies.

(d) If an IC selects to discontinue Access Trunk Arrangement 101XXXX or Feature Group D service in the converting end office prior to the conversion date or within two years after the introduction of Access trunk Arrangement 101XXXX or Feature Group D in the converting end office, the IC is obligated to contact in writing all end users or agents who have selected, or have been allocated to, the canceling IC as their designated IC,

13. Additional Engineering, Additional Labor and Miscellaneous Services

13.3 Miscellaneous Services (Cont'd)

13.3.3 Presubscription (Cont'd)

(B) Provisions (Cont'd)

(5) Initial or Change Charge Application (Cont'd)

(d) (Cont'd)

inform these end users or agents of the cancellation, request the end users or agents to select a new IC, and state that the canceling IC will pay for the change charge. The Telephone Company will bill the IC an amount equal of the product of the Presubscription Charge, as set forth in (e) following, multiplied by the total number of end users or agents assigned to the IC at the time the IC notifies the Telephone Company of discontinuance of the Access Trunk Arrangements 101XXXX or Feature Group D.

ACCESS SERVICE

13. Additional Engineering, Additional Labor and Miscellaneous Services

13.3 Miscellaneous Services (Cont'd)

13.3.3 Presubscription (Cont'd)

(B) Provisions (Cont'd)

(5) Initial or Change Charge Application (Cont'd)

(e) Nonrecurring charges for presubscription are as follows:

	USOC	Nonrecurring Charge
Presubscription-InterLATA		
- per Telephone Exchange Service line and trunk	9ZP C9ZP	
- Billed to End User or Agent		$5.00
- Billed to IC		$5.00

(i) In the case of an end user authorization dispute, the alleged unauthorized carrier will be billed the appropriate Presubcription charge(s) for the alleged unauthorized change and the appropriate Presubcription charge(s) to change the end user to their preferred IC. (T)

(ii) The Interexchange Carrier Pays (IC Pays) Billing Option is an agreement between the Telephone Company and an Interexchange Carrier (IC) under which the Presubscription (PIC) change charge is assessed to the IC instead of being charged to the end user customer when the Telephone Company changes an end user's primary IC assignment. (N)

The PIC change may either be requested via an IC-provided end user or agent list submitted in the Customer Account Record Exchange (CARE) format (IC Pays - Carrier Initiated) or by the end user customer directly to the Telephone Company (IC Pays - Customer Initiated).

ICs that subscribe to "IC Pays - Carrier Initiated" have the option to redirect billing of the PIC change charge on a case by case basis. (N)

13. Additional Engineering, Additional Labor and Miscellaneous Services

13.3 Miscellaneous Services (Cont'd)

13.3.3 Presubscription (Cont'd) (N)

(B) Provisions (Cont'd)

(5) Initial or Change Charge Application (Cont'd)

(e) (Cont'd)

(ii) (cont'd)

For ICs that subscribe to "IC Pays – Customer Initiated", all end user PIC changes to the IC's CIC initiated through the Telephone Company will be redirected to the IC.

The IC submitting the PIC change must sign an IC Pays Billing Option agreement with the Telephone Company for either of the IC Pays Billing Options to apply.

When these conditions have been met, the end user customer will not be assessed the Presubscription change charge for the PIC change. The IC participating in the IC Pays Billing Option will be charged the Presubscription change charge per line or trunk as set forth in Section 13.3.3(B)(5)(e). (N)

13.3.4 Standard Jacks - Registration Program

Standard jacks are provided by the Telephone Company to connect Registered Equipment. The use of jacks is covered in Part 68 of the FCC's Rules and Regulations. Specified jacks are described in the document on file with the FCC entitled "Descriptions of Standard Registration Program Connection Configurations Supplementing Configurations Described in Subpart F of Part 68 of the FCC's Rules and Regulations."

13. Additional Engineering, Additional Labor and Miscellaneous Services (Cont'd)

13.3 Miscellaneous Services (Cont'd)

13.3.4 Standard Jacks - Registration Program (Cont'd)

These jacks are used to terminate services provided by the Telephone Company. Other services or facilities provided by the Telephone Company or by others may also be terminated in any spare capacity of the jacks remaining after installation without additional charge for the use of such capacity.

The nonrecurring charges, which include installation, for standard jacks and their typical uses are set forth following:

	USOC	Nonrecurring Charge
(A) Standard Voice Jacks		
(1) Miniature six-position jacks for connection of terminal equipment as follows:		
(a) Single line telephone set surface or flush mounted.	RJ11C	$10.00
(b) Single line telephone sets wall mounted.	RJ11W	$10.00

13. Additional Engineering, Additional Labor and Miscellaneous Services (Cont'd)

13.3 Miscellaneous Services (Cont'd)

13.3.4 Standard Jacks - Registration Program (Cont'd)

(A) Standard Voice Jacks (Cont'd)

(1) (Cont'd)	USOC	Nonrecurring Charge
(c) Two-line nonkey telephone sets surface or flush mounted	RJ14C	$10.00
(d) Single-line bridged 4-wire exchange 2/RT T1/R1.	RJ1DC	$10.00
(e) Two-line nonkey telephone sets wall mounted.	RJ14W	$10.00
(f) Special single line equipment for use in hospital critical care areas.	RJ17C	$10.00

(This page filed under Transmittal No. 1)

13. Additional Engineering, Additional Labor and Miscellaneous Services (Cont'd)

13.3 Miscellaneous Services (Cont'd)

13.3.4 Standard Jacks - Registration Program (Cont'd)

(A) Standard Voice Jacks (Cont'd)

(1) (Cont'd)

	USOC	Nonrecurring Charge
(g) 9DB single line data equipment with mode indication and mode indication common leads. This jack is normally used in association with a series jack.	RJ16X	$10.00
(h) Three-line non-key telephone sets and ancillary devices.	RJ25C	$49.00

(2) 50 Position Miniature Ribbon for connection of multiline terminating equipment and channel derivation devices as follows:

(This page filed under Transmittal No. 1)

13. Additional Engineering, Additional Labor and Miscellaneous Services (Cont'd)

13.3 Miscellaneous Services (Cont'd)

13.3.4 Standard Jacks - Registration Program (Cont'd)

(A) Standard Voice Jacks (Cont'd)

(2) (Cont'd)

	USOC	Nonrecurring Charge
(a) For connection to 2-wire tie trunks E&M type I signaling. (12 line capacity)	RJ2EX	$160.00
(b) For connecti to 4-wire tie trunks E&M type I signaling. (8 line capacity)	RJ2GX	$160.00
(c) For connection to 2-wire tie trunks E&M type II signaling. (8 line capacity)	RJ2FX	$160.00
(d) For connection to 4-wire tie trunks E&M type II signaling. (6 line capacity)	RJ2HX	$160.00

(This page filed under Transmittal No. 1)

13. Additional Engineering, Additional Labor and Miscellaneous Services (Cont'd)

13.3 Miscellaneous Services (Cont'd)

13.3.4 Standard Jacks - Registration Program (Cont'd)

(A) Standard Voice Jacks (Cont'd)

(2) (Cont'd)

	USOC	Nonrecurring Charge
(e) For connection to off-premises station lines. (25 line capacity)	RJ21X	$160.00
(f) For use with series devices such as toll restrictors. (12 line capacity)	RJ71C	$105.00
(g) For connection of up to 12 line bridged 4-wire exchange 2/RT, T1/R1.	RJ2DX	$100.00

(This page filed under Transmittal No. 1)

13. Additional Engineering, Additional Labor and Miscellaneous Services (Cont'd)

13.3 Miscellaneous Services (Cont'd)

13.3.4 Standard Jacks - Registration Program (Cont'd)

(A) Standard Voice Jacks (Cont'd)

	USOC	Nonrecurring Charge
(3) Series Jacks for connection of terminal equipment as follows:		
(a) Single line reporting devices.	RJ31X	$ 66.00
(b) Series ancillary devices such as automatic dialers. Single line sets with exclusion.	RJ32X	$ 66.00
(c) Two line telephone sets with exclusion on one line.	RJ37X	$ 66.00
(4) Weatherproof Jack for use with single line telephone sets used at locations such as boats and marinas.	RJ15C	$120.00

(This page filed under Transmittal No. 1)

13. Additional Engineering, Additional Labor and Miscellaneous Services (Cont'd)

13.3 Miscellaneous Services (Cont'd)

13.3.4 Standard Jacks - Registration Program (Cont'd)

(B) Standard Data Jacks

	USOC	Nonrecurring Charge
(1) Universal Data Jack for use in connecting Fixed Loss Loop (FLL) and Programmed (P) types of data equipment. (1 line capacity)	RJ41S	$65.00
(2) Programmed Data Jack for use in connecting programmed data equipment. (1 line capacity)	RJ45S	$5.00
(3) Multiple Line Universal Data Jack for use in connecting Fixed Loss Loop (FLL) and Programmed (P) types of data equipment. This jack will terminate up to eight lines. The selection of this jack requires the use of the equipment listed following.	RJ26X	$250.00

(This page filed under Transmittal No. 1)

13. Additional Engineering, Additional Labor and Miscellaneous Services (Cont'd)

13.3 Miscellaneous Services (Cont'd)

13.3.4 Standard Jacks - Registration Program (Cont'd)

(B) Standard Data Jacks (Cont'd)

(3) (Cont'd)

	USOC	Nonrecurring Charge
(a) Multiple Line Universal Data Jack Circuit Cards. For use with Multiple Line Universal Data Jack. One circuit card per circuit required.	RJ26S	$79.00
(b) Multiple Line Universal Data Jack Mounting options. For use with Multiple Line Universal Data Jack. One required per Multiple Line Universal Data Jack.		
- Wall Mounting with cover.	RJM3X	$45.00
- Rack Mounting (19 inch or 23 inch)	RJM4X	$28.00

13. Additional Engineering, Additional Labor and Miscellaneous Services (Cont'd)

13.3 Miscellaneous Services (Cont'd)

13.3.5 Testing Services

Testing Services offered under this section of the tariff are optional and subject to rates and charges as set forth in 13.3.5(C) following. Other testing services, as described in 6.1.5 and 7.1.7 preceding, are provided by the Telephone Company in association with Access Services and are furnished at no additional charge.

Testing services are normally provided by Telephone Company personnel at Telephone Company locations. However, provisions are made in (A)(4) and (B)(2) following for a customer to request Telephone Company personnel to perform testing services at the customer's premises.

The offering of Testing Services under this section of the tariff is made subject to the availability of the necessary qualified personnel and test equipment at the various test locations mentioned in (A), (B) and (C) following:

(A) Switched Access Service

Testing Services for Switched Access are comprised of (a) tests which are performed during the installation of a Switched Access Service, i.e., Acceptance Tests, (b) tests which are performed after acceptance of such access services by a customer which are without charge i.e., routine testing and (c) additional tests which are performed during or after acceptance of such access services by a customer for which additional charges apply, i.e., Additional Cooperative Acceptance Tests and in-service tests.

13. Additional Engineering, Additional Labor and Miscellaneous Services (Cont'd)

13.3 Miscellaneous Services (Cont'd)

13.3.5 Testing Services (Cont'd)

(A) Switched Access Service (Cont'd)

Routine tests are those tests performed by the Telephone Company on a regular basis, as set forth in 6.1.5 preceding which are required to maintain Switched Access Service. Additional in-service tests may be done on an automatic basis (no Telephone Company or customer technicians involved), on a manual basis [Telephone Company technician(s) involved at Telephone Company office(s) and Telephone Company or customer technician(s) involved at the customer designated premises].

Testing services are ordered to the Dial Tone Office for an ALA or FGA, to the access tandem or end office for an ATA950 or FGB (wherever the ATA950 or FGB service is ordered) and to the end office for ATA's NEA and XXX or FG's C and D. Testing Services for Directory Assistance Service not routed through an access tandem is ordered to a Directory Assistance Location for each NPA.

(1) Additional Cooperative Acceptance Testing (ACAT)

Additional Cooperative Acceptance Testing of Switched Access Service involves the Telephone Company provision of a technician at its office(s) and the customer provision of a technician at its premises, with suitable test equipment to perform the required tests.

13. Additional Engineering, Additional Labor and Miscellaneous Services (Cont'd)

13.3 Miscellaneous Services (Cont'd)

13.3.5 Testing Services (Cont'd)

(A) Switched Access Service (Cont'd)

(1) Additional Cooperative Acceptance Testing (ACAT) (Cont'd)

Additional Cooperative Acceptance Tests may, for example, consist of the following tests:

. Impulse Noise
. Phase Jitter
. Signal to C-Notched Noise Ratio
. Intermodulation (Nonlinear) Distortion
. Frequency Shift (Offset)
. Envelope Delay Distortion
. Dial Pulse Percent Break

(2) Additional Automatic Testing

Additional Automatic Testing (AAT) of Switched Access Services (Access Trunk Arrangements or Feature Groups B, C and D), is a service where the customer provides remote office test lines and 105 test lines with associated responders or their functional equivalent. The customer may order, at additional charges, gain-slope and C-notched noise testing and may order the routine tests (1004 Hz loss, C-Message Noise and Balance) on an as needed or more than routine schedule.

13. Additional Engineering, Additional Labor and Miscellaneous Services (Cont'd)

13.3 Miscellaneous Services (Cont'd)

13.3.5 Testing Services (Cont'd)

(A) Switched Access Service (Cont'd)

(2) Additional Automatic Testing (Cont'd)

The Telephone Company will provide an AAT report that lists the test results for each trunk tested. Trunk test failures requiring customer participation for trouble resolution will be provided to the customer on an as-occurs basis.

(3) Additional Manual Testing

Additional Manual Testing (AMT) of Switched Access Services (All Basic Service Arrangements or Feature Groups A, B, C, and D and DirectoryAccess Service not routed through an access tandem), where the Telephone Company provides a technician at its office(s) and the TelephoneCompany or customer provides a technician at the customer designated premises, with suitable test equipment to perform the required tests, willnormally consist of gain-slope and C-notched noise testing. However, the Telephone Company will conduct any additional tests which the IC may request.

13. Additional Engineering, Additional Labor and Miscellaneous Services (Cont'd)

13.3 Miscellaneous Services (Cont'd)

13.3.5 Testing Services (Cont'd)

(A) Switched Access Service (Cont'd)

(3) Additional Manual Testing (Cont'd)

The Telephone Company will provide an AMT report listing the test results for each trunk tested. Trunk test failures requiring customer participation for trouble resolution will be provided to the customer on a per occurrence basis.

(4) Obligations of the Customer

(a) The customer shall provide the Remote Office Test Line priming data to the Telephone Company, as appropriate-to support routine testing as set-forth in 6.1.5(B) preceding preceding.

(b) The customer shall make the facilities to be tested available to the Telephone

(B) Special Access Service

The Telephone Company will provide assistance in performing specific tests requested by the customer.

13. Additional Engineering, Additional Labor and Miscellaneous Services (Cont'd)

13.3 Miscellaneous Services (Cont'd)

13.3.5 Testing Services (Cont'd)

(B) Special Access Service (Cont'd)

(1) Additional Cooperative Acceptance Testing (ACAT)

When a customer provides a technician at its premises or at an end user's premises, with suitable test equipment to perform the requested tests, the Telephone Company will provide a technician at its office for the purpose of conducting Additional Cooperative Acceptance
Testing on Voice Grade Services. At the customer's request, the Telephone Company will provide a technician at the customer's premises or at the end user premises. These tests may, for example, consist of the following:

- Attenuation Distortion (i.e., frequency response)
- Intermodulation Distortion (i.e., harmonic distortion)
- Phase Jitter
- Impulse Noise
- Envelope Delay Distortion
- Echo Control
- Frequency Shift

(2) Additional Manual Testing

The Telephone Company will provide a technician at its premises, and the Telephone Company or customer will provide a technician at the customer's designated premises with suitable test equipment to perform the requested tests.

13. Additional Engineering, Additional Labor and Miscellaneous Services (Cont'd)

13.3 Miscellaneous Services (Cont'd)

13.3.5 Testing Services (Cont'd)

(B) Special Access Service (Cont'd)

(3) Obligation of the Customer

When the customer subscribes to Testing Service as set forth in this section, the customer shall make the facilities to be tested available to the Telephone Company at times mutually agreed upon.

13. Additional Engineering, Additional Labor and Miscellaneous Services (Cont'd)

13.3 Miscellaneous Services (Cont'd)

13.3.5 Testing Services (Cont'd)

(C) Rates and Charges

(1) Switched Access

(a) Additional Cooperative Acceptance Testing

				Each Half Hour or Fraction Thereof
Testing Periods	USOC	Installation and Repair Technician	USOC	Central Office Maintenance Technician
- Basic Time, normally scheduled working hours, per technician	UBCNR/UBC++	$40.21	UBCNM	$32.72
- Overtime, outside of normally working scheduled hours on as scheduled work day, per technician	UBCXR/UBC++	$60.32*	UBCXM	$49.08*
- Premium Time, outside of scheduled work day, per technician	UBCPR/UBC++	$80.42*	UBCPM	$65.43*

* A call-out of a Telephone Company employee at a time not consecutive with the employee's scheduled work period is subject to a minimum charge of four hours.

(This page filed under Transmittal No. 1)

13. Additional Engineering, Additional Labor and Miscellaneous Services (Cont'd)

13.3 Miscellaneous Services (Cont'd)

13.3.5 Testing Services (Cont'd)

(C) Rates and Charges (Cont'd)

(1) Switched Access (Cont'd)

(b) Additional Automatic Testing (AAT)

The Additional Tests as set forth following may be ordered by the customer, at additional charges, 60 days prior to the start of the customer prescribed schedule.

To First Point of Switching Additional Tests	USOC	Per Test Per Transmission Paths
Gain-Slope Tests	USCXD	$2.89
C-Notched Noise Tests	USCXE	$2.89
1004 Hz Loss*	USCXA	$2.89
C-Message Noise*	USCXB	$2.89
Balance (return loss)*	USCXC	$2.89

(This page filed under Transmittal No. 1)

13. Additional Engineering, Additional Labor and Miscellaneous Services (Cont'd)

13.3 Miscellaneous Services (Cont'd)

13.3.5 Testing Services (Cont'd)

(C) Rates and Charges (Cont'd)

(1) Switched Access (Cont'd)

(c) Additional Manual Testing

The Additional Tests as set forth following may be ordered by the customer, at additional charges, 60 days prior to the start of the testing schedule as mutually agreed to by the customer and the Telephone Company.

		Each Half Hour or Fraction Thereof		
Additional Test	USOC	Installation and Repair Technician	USOC	Central Office Maintenance Technician
Gain - Slope, C-Notched Noise and any other agreed to test, - Basic Time, normally scheduled working hours, per technician	UBSNR/UBS++	$40.21	UBSNM	$32.72

13. Additional Engineering, Additional Labor and Miscellaneous Services (Cont'd)

13.3 Miscellaneous Services (Cont'd)

13.3.5 Testing Services (Cont'd)

(C) Rates and Charges (Cont'd)

(1) Switched Access (Cont'd)

(c) Additional Manual Testing (Cont'd)

		Each Half Hour or Fraction Thereof		
Additional Test	USOC	Installation and Repair Technician	USOC	Central Office Maintenance Technician
-Overtime, outside of normally working scheduled hours on as scheduled work day, per technician	UBSXR/UBS++	$60.32*	UBSXM	$49.08*
-Premium Time, outside of scheduled Work day, per technician	UBSPR/UBS++	$80.42*	UBSPM	$65.43*

* A call–out of a Telephone Company employee at a time not consecutive with the employee's scheduled work period is subject to a minimum charge of four hours.

13. Additional Engineering, Additional Labor and Miscellaneous Services (Cont'd)

13.3 Miscellaneous Services (Cont'd)

13.3.5 Testing Services (Cont'd)

(C) Rates and Charges (Cont'd)

(2) Special Access

(a) Additional Cooperative Acceptance Testing (ACAT)

		Each Half Hour or Fraction Thereof			
Testing Periods	USOC	Installation and Repair Technician	USOC	Central Office Maintenance Technician	
- Basic Time, normally scheduled working hours, per technician	SNTNR/SNT++	$40.21	SNTNM	$32.72	(T)
- Overtime, outside of normally working scheduled hours on as scheduled work day, per technician	SNTXR/SNT++	$60.32*	SNTXM	$49.08*	(T)
- Premium Time, outside of scheduled work day, per technician	SNTXR/SNT++	$80.42*	SNTPM	$65.43*	

* A call-out of a Telephone Company employee at a time not consecutive with the employee's scheduled work period is subject to a minimum charge of four hours.

(This page filed under Transmittal No. 4)

13. Additional Engineering, Additional Labor and Miscellaneous Services (Cont'd)

13.3 Miscellaneous Services (Cont'd)

13.3.5 Testing Services (Cont'd)

(C) Rates and Charges (Cont'd)

(2) Special Access (Cont'd)

(b) Additional Manual Cooperative and Additional Manual Testing

		Each Half Hour or Fraction Thereof		
Testing Periods	USOC	Installation and Repair Technician	USOC	Central Office Maintenance Technician
- Basic Time, normally scheduled working hours, per technician	SNONR/SNO++	$40.21	SNONM	$32.72
- Overtime, outside of normally working scheduled hours on as scheduled work day, per technician	SNOXR/SNO++	$60.32*	SNOXM	$49.08*
- Premium Time, outside of scheduled work day, per technician	SNOPR/SNO++	$80.42*	SNOPM	$65.43*

* A call-out of a Telephone Company employee at a time not consecutive with the employee's scheduled work period is subject to a minimum charge of four hours.

(This page filed under Transmittal No. 1)

13. Additional Engineering, Additional Labor and Miscellaneous Services (Cont'd)

13.3 Miscellaneous Services (Cont'd)

13.3.6 Provision of Access Service Billing Information

(A) The customer will receive one copy of its monthly bills in a standard paper format. Billing for access services is done according to the bill mediums set forth in (C) following. Bills for access service are rendered for by state, Access Customer Name Abbreviation (ACNA), by customer type (access or local), by bill period and by Revenue Accounting Office (RAO).

If charges for Access Services Billing exist in the Telephone Company's Intrastate Access Service Tariffs and its Interstate Access Service Tariff, the total charge to the customer will be calculated based on one half of the intrastate charge and one half of the interstate charge. If charges for Access Services Billing exist only in the Telephone Company's Interstate Access Services Tariff, full interstate charges will apply.

(B) At the option of the customer, and for an additional charge:

(1) Customer monthly bills may be provided on magnetic tape, CD-ROM or DVD. (N)

Data provided on CD-ROM and DVD will be provided for use with Windows 3.1 or better, ASCII and Non-compacted. The data will be formatted using industry standards for access services billing. In addition to the above for CD-ROM and DVD, the following options are available and must be specified by the customer when requesting this media:

- Format:
  - Bill Page format (billing data formatted exactly as it is formatted on a paper bill)
  - Bill Data format (billing data formatted exactly as it is formatted on magnetic cartridge or electronic transmission)
- Overnight delivery or US Mail (N)

(2) Additional copies of the customer monthly bill or service and features record may be provided in standard paper format.

(C) The rates and charges for the provision of Access Service Billing Information are as follows:

(1) Provision of Standard Billing Detail and/or Information in magnetic tape format,	USOC	FID	RATES
- per record	BBLCT	DMT	$0.015
- per tape	WCP2X/MTBAC		50.00

(This page filed under Transmittal No. 74)

13. Additional Engineering, Additional Labor and Miscellaneous Services (Cont'd)

13.3 Miscellaneous Services (Cont'd)

13.3.6 Provision of Access Service Billing Information (Cont'd)

(C) (Cont'd)

		USOC	FID	RATES	
(2)	Additional copies of customer monthly bill or service and features record in standard paper,				
	- per single page	NOB/NEL		0.03	
	- per double page	NOB/NEL		0.06	
(3)	CD-ROM				(N)
	-Per disk	WCP6X		$10.00	
(4)	DVD				
	-Per disk	WCP7X		$10.00	(N)

13. Additional Engineering, Additional Labor and Miscellaneous Services (Cont'd)

13.3 Miscellaneous Services (Cont'd)

13.3.7 Miscellaneous Equipment

(A) Controller Arrangement

This arrangement enables the customer to control up to 48 transfer functions at a Telephone Company central office via a remote keyboard terminal capable of either 300 or 1200 bps operation. Included as part of the Controller Arrangement is a dial-up data station located at the Telephone Company Central Office to provide access to the Controller Arrangement. This dial-up data station consists of a 212A DATAPHONE data set and an appropriate Telephone Company provided channel.

The Controller Arrangement must be located in the same Telephone Company central office as the transfer functions which it controls.

	USOC	Monthly Rate
- Per arrangement	XTDDU	ICB

(This page filed under Transmittal No. 1)

13. Additional Engineering, Additional Labor and Miscellaneous Services

13.3 Miscellaneous Services (Cont'd)

13.3.8 International Blocking Service

(A) Service Description

International Blocking Service is an optional end user feature available, where facilities permit, in Telephone Company electronic end offices. This feature will block consumers from direct-dialing international calls via the preselected or presubscribed interexchange carrier (011+) on designated telephones, where technically feasible. International Blocking Service will also block customers from over-riding the preselected interexchange carrier when dialing direct-dialed international calls (10XXX 011+) from designated telephones, where technically feasible.

This feature provides end office blocking of direct-dialed 011+ and 10XXX+011+ calls by routing such calls to a recorded announcement. It is available for line side services offered in the Telephone Company's local or general exchange tariffs that are provided either to aggregator or non-aggregator business customers.

An aggregator is defined as any person that, in the ordinary course of its operations, makes telephones available to the public or to transient users of it's premises, for interstate telephone calls using a provider of operator services.

Non-aggregator business customers are all other business customers.

(B) This is a nonchargeable option when ordered with the primary service. When ordered as an option to existing service, a miscellaneous service order charge will apply. For charges associated with these miscellaneous changes, see Section 13.

13. Additional Engineering, Additional Labor and Miscellaneous Services

13.3 Miscellaneous Services (Cont'd)

13.3.9 900 Call Blocking

(A) Service Description

900 Call Blocking is an optional central office call blocking service that allows the Telephone Company's residential and business subscribers to block calls placed from their telephones to interstate and intrastate interLATA Interexchange Carrier 900 services (900 IEC) program telephone numbers. 900 Call Blocking will be provided at the serving central office, where technically feasible. When placed on the subscribers line, 900 Call Blocking will prevent access to all directly-dialed, telephone company operator-assisted and Telephone Company operator-entered billing 900 IEC program telephone numbers.

This feature provides end office blocking of direct-dialed 900 calls by routing such calls to a recorded announcement. The announcement will tell subscribers than the call cannot be completed as dialed.

Subscriber's may order 900 Call Blocking by calling their business office.

However, requests to remove Call Blocking must be submitted in writing.

900 Call Blocking is a non-chargeable option when ordered at the time of establishment of a new telephone number and for the first 60 days there after. When ordered as an option to existing service beyond 60 days, Nevada Bell will provide to all residential customers a one-time opportunity to subscribe free of charge to 900 Call Blocking. There will be no time limit on the residential customer's ability to utilize this one-time option. Residential customers will be charged non-recurring rates for any and all subsequent requests for 900 Call Blocking.

ACCESS SERVICE

13. Additional Engineering, Additional Labor and Miscellaneous Services

13.3 Miscellaneous Services (Cont'd)

13.3.9 900 Call Blocking (Cont'd)

(B) Rates and Charges

Add 900 Call Blocking-Residence	Nonrecurring Charge	Monthly Rate	USOC
Call Blocking Individual Line Flat Rate[1] Residence Service			
First Request	NO	NO	CLU
Subsequent Request - per line	$13.31	NO	CL1
Call Blocking Individual Line Measured Rate[1] Residence Service			
First Request	NO	NO	CLU
Subsequent Request - per line	$13.31	NO	CL1
Call Blocking Universal Lifeline Telephone Service (ULTS) - per line	NO	NO	CLU
Call Blocking with New Connect or Transfer of Service - per line	NO	NO	CLU
Call Blocking with other Network Change order - per line	NO	NO	CLU
Remove 900 Call Blocking - per line	NO	NO	--

Note 1: Nevada Bell will provide all residence customers a one time opportunity to subscribe to 900 Blocking Service free of charge

(This page filed under Transmittal No. 1)

13. Additional Engineering, Additional Labor and Miscellaneous Services

13.3 Miscellaneous Services (Cont'd)

13.3.9 900 Call Blocking (Cont'd)

(B) Rates and Charges

Add 900 Call Blocking-Residence	Nonrecurring Charge	Monthly Rate	USOC
Call Blocking Business Service Flat Rate[1,2,3] - per line	$13.31 (Not to exceed $39.93 per service order)	NO	CL9
Call Blocking Business Service Measured Rate [1,2,3] - per line	$13.31 (Not to exceed $30.00 per service order)	NO	CL9
Call Blocking with New Connect or Transfer of Service - per line	NO	NO	CL9
900 Call Blocking with other Network Change order - per line	NO	NO	CL9
Remove 900 Call Blocking - per line	NO	NO	--

Note 1: 900 Call Blocking is not available on WATS at this time.
Note 2: 900 call currently is not allowed on coin sent paid, coinless and COPT services.
Note 3: Nevada Bell will waive 900 Call Blocking nonrecurring charges when requested by business customers within 60 days of establishing new service (service order date).

(This page filed under Transmittal No. 1)

13. Additional Engineering, Additional Labor and Miscellaneous Services (Cont'd)

13.3 Miscellaneous Services (Cont'd)

13.3.10 Optional Features associated with Pay Telephone Service

The following non chargeable optional feature is onlyavailable with Pay Telephone Service offered in theTelephone Company's local exchange tariffs. This featureis available where facilities and operating conditionspermit and must be ordered at the same time the customer orders the Pay Telephone line from the Telephone Company's local or general exchange tariffs.

– International Direct Distance Dialing (IDDD)

13. Additional Engineering, Additional Labor, and Miscellaneous Services (N)
(Cont'd)

13.3 Miscellaneous Services (Cont'd)

13.3.11 Long Distance Trouble Management Service (LDTMS)

(A) Service Description

LDTMS enables a participating Interexchange Carrier (IC) to receive, from the Telephone Company, specific trouble ticket information that relates to the IC's service after a trouble report has been initiated by a residential or business customer who is presubscribed or interconnected to that IC's interstate network. Specific trouble-ticket information is delivered to the participating IC.

If, during a telephone contact between the Telephone Company’s repair personnel and an IC's end-user customer, it is determined that trouble resides in the IC's interstate network, the end-user customer is informed that the ticket will be delivered to the IC for resolution. Telephone Company personnel will answer all repair calls using the Telephone Company brand name.

LDTMS is only provided for a participating IC’s residential and business customers who are also customers of the Telephone Company's local retail services. In addition, only those residential and business customers who are presubscribed or interconnected to the IC for direct 1+ dialing are eligible for this service. LDTMS does not support toll-free or data services.

LDTMS will be provided on a negotiated interval basis, which may include joint-acceptance testing. If the IC for the residential or business end-user customer has not subscribed to LDTMS, that end-user customer will be treated in accordance with current operating procedures. (N)

13. Additional Engineering, Additional Labor, and Miscellaneous Services (Cont'd) (N)

13.3 Miscellaneous Services (Cont'd)

13.3.11 Long Distance Trouble Management Service (LDTMS) (Cont'd)

(B) Undertaking of the Telephone Company

The Telephone Company will be responsible for providing the IC all the information needed to establish trouble-ticket handoff. The Telephone Company will also control the format of the information that will be made available to the IC.

(C) Obligations of the IC

Each IC will be solely responsible for the development of its own operation support systems that interface with the Telephone Company's trouble management system. Each IC will also be solely responsible for meeting the interface standards and requirements as set by the Telephone Company.

(D) Rate Regulations

A monthly recurring rate will apply to each participating IC for every month or fraction thereof that LDTMS is provided. In addition to the monthly recurring charge, there will be a transaction charge for each ticket that is delivered to the IC's trouble management system. No charges will apply to an IC's residential or business end-user customers. Rates and charges for LDTMS are set forth in Section 13.3.11 (E) following. (N)

13. Additional Engineering, Additional Labor, and Miscellaneous Services (Cont'd) (N)

13.3 Miscellaneous Services (Cont'd)

13.3.11 Long Distance Trouble Management Service (LDTMS) (Cont'd)

(E) Rates and Charges

	USOC	Monthly Rate	Transaction Charge
Long Distance Trouble Management Service (LDTMS)	WTR	$8,300.00	
Transaction Charge per trouble ticket	TLR		$2.20

(N)

(This page filed under Transmittal No. 37)

13. Additional Engineering, Additional Labor, and Miscellaneous Services (Cont'd) (N)

13.3 Miscellaneous Services (Cont'd)

13.3.12 Data Trouble Management Services (DTMS)

(A) Service Description

DTMS enables a participating Interexchange Carrier (IC) to receive, from the Telephone Company, specific trouble ticket information that relates to the IC's service after a trouble report has been initiated by a business customer who is utilizing that IC's interstate network. This is accomplished by having specific trouble ticket information delivered to the participating IC. The method of trouble ticket delivery will be verbal or faxed to a designated telephone number associated with the IC.

If, during a telephone contact between the Telephone Company’s personnel and an IC's end-user customer, it is determined that the circuit is owned by the IC, the end-user customer is informed that the trouble will be reported to the IC for resolution. Telephone Company personnel will answer all repair calls using the Telephone Company brand name.

DTMS is only provided to participating ICs that are customers of the Telephone Company's special access service. Furthermore, DTMS is only available to the IC’s end-user business customers who subscribe to the IC for data services, and utilize as underlying transport, the Telephone Company’s special access service.

DTMS will be provided on a negotiated interval basis, which may include joint-acceptance testing. If the IC for the end-user customer has not subscribed to DTMS, that end-user customer will be treated in accordance with current operating procedures.

DTMS will only be made available for initial trouble referrals; subsequent trouble ticket status information must be provided by the IC to the customer. (N)

13. Additional Engineering, Additional Labor, and Miscellaneous Services (Cont'd) (N)

13.3 Miscellaneous Services (Cont'd)

13.3.12 Data Trouble Management Services (DTMS) (Cont'd)

(B) Undertaking of the Telephone Company

The Telephone Company will be responsible for providing the IC all the information needed to establish trouble ticket handoff. The Telephone Company will also control the format of the information that will be made available to the IC.

(C) Obligations of the IC

The IC will be responsible for the development of its own operation support systems that interface with the Telephone Company's trouble management system. Each IC will also be responsible for meeting the interface standards and requirements as set by the Telephone Company.

(D) Rate Regulations

A monthly recurring rate will apply to each participating IC for every month or fraction thereof that DTMS is provided. No charges will apply to an IC's end-user customers. Rates and charges for DTMS are set forth in Section 13.3.18 (E) (Rates and Charges) following.

(E) Rates and Charges

	USOC	Monthly Rate
Monthly Recurring Charge	TBLDX	$7,900

(N)

ACCESS SERVICE

	Page No.	
14. Exceptions to Access Service Offerings	14-2	
14.1 Items Not Offered in the Operating Territory of this Company	14-2	
14.2 Interstate Served Foreign Exchange Service	14-2	(N)

(This page filed under Transmittal No. 1)

14. Exceptions to Access Service Offerings

The service offered under the provisions of this tariff are subject to availability as set forth in 2.1.4 preceding. In addition, the following exceptions apply:

14.1 The following items are not offered in the operating territory of this Company.

Paragraph	Offering	USOC

14.2 Interstate Served Direct Foreign Exchange Service

With the exception of Presubscription, as set forth in 13.3.3 preceding, the regulations and rates set forth in this tariff do not apply to customers for the type of connection(s) and in the location(s) listed following. The regulations and rates for this (these) connection(s) are the applicable Telephone Exchange Services regulations and rates specified in the Local and/or General Exchange Service tariff for the exchange from which the connection is provided. In addition, regulations and rates for the associated channel between the locality in which the customer is located and the exchange from which the connection is provided, apply as specified in AT&T's Tariff F.C.C. No. 10 for Series 2000, Type 2006, Channels or its successor tariff for comparable channels.

Customer Location		Exchange from which	Type of
Locality	State	Connection is Provided	Connection
Verdi	Calif.	Reno, Nev.	Individual

(This page filed under Transmittal No. 1)

ACCESS SERVICE

		Page No.	
15.	Interface Groups, Transmission Specifications and Channel Interfaces	15-2	
15.1	Local Transport Interface Groups	15-2	
15.1.1	Interface Group 1 (USOC TPP1X)	15-2	
15.1.2	Interface Group 2 (USOC TPP2X)	15-3	
15.1.3	Interface Group 3 (USOC TPP3X)	15-4	
15.1.4	Interface Group 4 (USOC TPP4X)	15-4	
15.1.5	Interface Group 5 (USOC TPP5X)	15-5	
15.1.6	Interface Group 6 (USOC TPP6X)	15-6	
15.1.7	Interface Group 7 (USOC TPP7X)	15-7	
15.1.8	Interface Group 8 (USOC TPP8X)	15-7	
15.1.9	Interface Group 9 (USOC TPP9X)	15-8	
15.1.10	Interface Group 10 (USOC TPPAX)	15-9	
15.1.11	Available Premises Interface Codes	15-10	
15.1.12	Supervisory Signaling	15-13	
15.2	Transmission Specifications Switched Access Service	15-15	
15.2.1	Standard Transmission Specifications	15-15	
15.2.2	Data Transmission Parameters	15-23	
15.3	Special Access Channel Interface and Network Channel Codes	15-28	
15.3.1	Glossary of Channel Interface Codes and Options	15-29	
15.3.2	Impedance	15-33	
15.3.3	Digital Hierarchy Channel Interface Codes (4DS)	15-34	
15.3.4	Service Designator/Network Channel Code Conversion Table	15-34	
15.3.5	Compatible Channel Interfaces	15-37	(N)

(This page filed under Transmittal No. 1)

15. Interface Groups, Transmission Specifications and Channel Interfaces

15.1 Local Transport Interface Groups

Interface Group 1 is provided with Type C Transmission Specifications, and Interface Groups 2 through 10 are provided with Type A or B Transmission Specifications, depending on the Basic Service Arrangement or Feature Group and whether the Access y Service is routed directly or through an access tandem. All Interface Groups are provided with Data Transmission Parameters.

Only certain premises interfaces are available at the customer designated premises. The premises interfaces associated with the Interface Groups may vary among Basic Service Arrangements or Feature Groups. The various premises interfaces which are available with the Interface Groups, and the Basic Service Arrangements or Feature Groups with which they may be used, are set forth in 15.1 following.

15.1.1 Interface Group 1 (USOC TPPIX)

Interface Group 1, except as set forth in the following, provides two-wire voice frequency transmission at the point of termination at the customer's premises. The interface is capable of transmission of voice and associated telephone signals within the frequency bandwidth of approximately 300 to 3000 Hz.

Interface Group 1 is not provided in association with ATANEA or FGC and ATAXXX or FGD when the first point of switching is an access tandem. In addition, Interface Group 1 is not provided in association with an Access Trunk Arrangement or FGB, FGC or FGD when the first point of switching provides only four-wire terminations.

The transmission path between the point of termination at the customer designated premises and the first point of switching may be comprised of any form or configuration of plant capable of and typically used in the telecommunications industry for the transmission of voice and associated telephone signals within the frequency bandwidth of 300 to 3000 Hz.

15. Interface Groups, Transmission Specifications and Channel Interfaces (Cont'd)

15.1 Local Transport Interface Groups (Cont'd)

15.1.1 Interface Group 1 (USOC TPP1X) (Cont'd)

The interface is provided with loop supervisory signaling. When the interface is associated with ALA or FGA, such signaling will be loop start or ground start signaling. When the interface is associated with ATA950, ATANEA, ATAXXX, FGB, FGC or FGD, such signaling, except for two-way calling which is E&M signaling, will be reverse battery signaling.

15.1.2 Interface Group 2 (USOC TPP2X)

Interface Group 2 provides four-wire voice frequency transmission at the point of termination at the customer designated premises. The interface is capable of transmission of voice and associated telephone signals within the frequency bandwidth of approximately 300 to 3000 Hz.

The transmission path between the point of termination at the customer designated premises and the first point of switching may be comprised of any form or configuration of plant capable of and typically used in the telecommunications industry for the transmission of voice and associated telephone signals within the frequency bandwidth of 300 to 3000 Hz.

15. Interface Groups, Transmission Specifications and Channel Interfaces (Cont'd)

15.1 Local Transport Interface Groups (Cont'd)

15.1.2 Interface Group 2 (USOC TPP2X) (Cont'd)

The interface is provided with loop supervisory signaling. When the interface is associated with ALA or FGA, such signaling will be loop start or ground start signaling. When the interface is associated with ATA950, ATANEA, ATAXXX, FGB, FGC OR FGD, such signaling, except for two-way calling which is E&M signaling, will be reverse battery signaling.

15.1.3 Interface Group 3 (USOC TPP3X)

Interface Group 3 provides group level analog transmission at the point of termination at the customer designated premises. The interface is capable of transmitting electrical signals between the frequencies of 60 to 108 kHz, with the capability to channelize up to 12 voice frequency transmission paths. Certain frequencies within the bandwidth of the Interface Group are reserved for Telephone Company use, e.g., pilot and carrier group alarm tones. Before the first point of switching, the Telephone Company will provide multiplex equipment to derive 12 transmission paths of frequency bandwidth of approximately 300 to 3000 Hz.

The interface is provided with individual transmission path SF supervisory signaling.

15.1.4 Interface Group 4 (USOC TPP4X)

Interface Group 4 provides supergroup level analog transmission at the point of termination at the customer designated premises. The interface is capable of

15. Interface Groups, Transmission Specifications and Channel Interfaces (Cont'd)

15.1 Local Transport Interface Groups (Cont'd)

15.1.4 Interface Group 4 (USOC TPP4X) (Cont'd)

transmitting electrical signals between the frequencies of 312 to 552 kHz, with the capability to channelize up to 60 voice frequency transmission paths. Certain frequencies within the bandwidth of the Interface Group are reserved for Telephone Company use, e.g., pilot and carrier group alarm tones. Before the first point of switching, the Telephone Company will provide multiplex and channel bank equipment to derive 60 transmission paths of frequency bandwidth of approximately 300 to 3000 Hz.

The interface is provided with individual transmission path SF supervisory signaling.

15.1.5 Interface Group 5 (USOC TPP5X)

Interface Group 5 provides mastergroup level analog transmission at the point of termination at the customer designated premises. The interface is capable of transmitting electrical signals between the frequencies of 564 to 3084 kHz, with the capability to channelize up to 600 voice frequency transmission paths. Certain frequencies within the bandwidth of the Interface Group are reserved for Telephone Company use, e.g., pilot and carrier group alarm tones. Before the first point of switching, the Telephone Company will provide multiplex and channel bank equipment to derive 600 transmission paths of frequency bandwidth of approximately 300 to 3000 Hz.

The interface is provided with individual transmission path SF supervisory signaling.

15. Interface Groups, Transmission Specifications and Channel Interfaces (Cont'd)

15.1 Local Transport Interface Groups (Cont'd)

15.1.6 Interface Group 6 (USOC TPP6X)

Interface Group 6 provides DS1 level digital transmission at the point of termination at the customer designated premises. The interface is capable of transmitting electrical signals at a nominal 1.544 Mbps, with the capability to channelize up to 24 voice frequency transmission paths. Before the first point of switching, when analog switching utilizing analog terminations is provided, the Telephone Company will provide multiplex and channel bank equipment to derive 24 transmission paths of a frequency bandwidth of approximately 300 to 3000 Hz. When digital switching or analog switching with digital carrier terminations is provided, the Telephone Company will provide, at the first point of switching, a DS1 signal in D3/D4 format.

The interface is provided with individual transmission path bit stream supervisory signaling.

(A) (USOC SLKS7)

Interface Group 6, used in conjunction with SS7, provides interconnection for common channel signaling access capability. It is also used in conjunction with 64CCC.

15. Interface Groups, Transmission Specifications and Channel Interfaces (Cont'd)

15.1 Local Transport Interface Groups (Cont'd)

15.1.7 Interface Group 7 (USOC TPP7X)

Interface Group 7 provides DS1C level digital transmission at the point of termination at the customer designated premises. The interface is capable of transmitting electrical signals at a nominal 3.152 Mbps, with the capability to channelize up to 48 voice frequency transmission paths. Before the first point of switching, when analog switching utilizing analog terminations is provided, the Telephone Company will provide multiplex and channel bank equipment to derive up to 48 voice frequency transmission paths of a frequency bandwidth of approximately 300 to 3000 Hz. When digital switching or analog switching with digital carrier terminations is provided, the Telephone Company will provide, at the first point of switching, DS1 signal in D3/D4 format.

The interface is provided with individual transmission path bit stream supervisory signaling.

15.1.8 Interface Group 8 (USOC TPP8X)

Interface Group 8 provides DS2 level digital transmission at the point of termination at the customer designated premises. The interface is capable of transmitting electrical signals at a nominal 6.312 Mbps, with the capability to channelize up to 96 voice frequency transmission paths. Before the first point of switching, when analog switching utilizing analog terminations is provided, the Telephone Company will provide multiplex and channel bank equipment in its office to derive up to 96 transmission paths of a frequency bandwidth of

15. Interface Groups, Transmission Specifications and Channel Interfaces (Cont'd)

15.1 Local Transport Interface Groups (Cont'd)

15.1.8 Interface Group 8 (USOC TPP8X)

approximately 300 to 3000 Hz. When digital switching or analog switching with digital carrier terminations is provided, the Telephone Company will provide, at the first point of switching, DS1 signal in D3/D4 format.

The interface is provided with individual transmission path bit stream supervisory signaling.

15.1.9 Interface Group 9 (USOC TPP9X)

Interface Group 9 provides DS3 level digital transmission at the point of termination at the customer designated premises. The interface is capable of transmitting electrical signals at a nominal 44.736 Mbps, with the capability to channelize up to 672 voice frequency transmission paths. Before the first point of switching, when analog switching utilizing analog terminations is provided, the Telephone Company will provide multiplex and channel bank equipment to derive up to 672 transmission paths of a frequency bandwidth of approximately 300 to 3000 Hz. When digital switching, or analog switching with digital carrier terminations is provided, the Telephone Company will provide, at the first point of switching, DS1 signal in D3/D4 format.

The interface is provided with individual transmission path bit stream supervisory signaling.

15. Interface Groups, Transmission Specifications and Channel Interfaces (Cont'd)

15.1 Local Transport Interface Groups (Cont'd)

15.1.10 Interface Group 10 (USOC TPPAX)

Interface Group 10 provides DS4 level digital transmission at the point of termination at the customer designated premises. The interface is capable of transmitting electrical signals at a nominal 274.176 Mbps, with the capability to channelize up to 4032 voice frequency transmission paths. Before the first point of switching, when analog switching utilizing analog terminations is provided, the Telephone Company will provide multiplex and channel bank equipment to derive up to 4032 transmission paths of a frequency bandwidth of approximately 300 to 3000 Hz. When digital switching or analog switching with digital carrier terminations is provided, the Telephone Company will provide, at the first point of switching, DS1 signal in D3/D4 format. The interface is provided with individual transmission path bit stream supervisory signaling.

15. Interface Groups, Transmission Specifications and Channel Interfaces (Cont'd)

15.1 Local Transport Interface Groups (Cont'd)

15.1.11 Available Premises Interface Codes

Following is a matrix showing, for each Interface Group, which premises interface codes are available as a function of the Telephone Company switch supervisory signaling and Feature Group or Service Arrangement. For explanations of these codes, see the Glossary of Channel Interface Codes in 15.3.1 following.

			Feature Group			
			A	B	C	D
			Basic Service Arrangement			
Interface Group	Telephone Company Switch Supervisory Signaling	Premises Interface Code	ALA	ATA 950	ATA NEA	ATA XXX
1	LO	2LS2	X			
	LO	2LS3	X			
	GO	2GS2	X			
	GO	2GS3	X			
	LO, GO	2DX3	X			
	LO, GO	4EA3-E	X			
	LO, GO	4EA3-M	X			
	LO, GO	6EB3-E	X			
	LO, GO	6EB3-M	X			
	RV, EA, EB, EC	2DX3		X	X	X
	RV, EA, EB, EC	4EA3-E		X	X	X
	RV, EA, EB, EC	4EA3-M		X	X	X
	RV, EA, EB, EC	6EB3-E		X	X	X
	RV, EA, EB, EC	6EB3-M		X	X	X
	EA, EB, EC,	6EC3			X	X
	RV	2RV3-0		X	X	X
	RV	2RV3-T		X	X	X

15. Interface Groups, Transmission Specifications and Channel Interfaces (Cont'd)

15.1 Local Transport Interface Groups (Cont'd)

15.1.11 Available Premises Interface Codes (Cont'd)

Interface Group	Telephone Company Switch Supervisory Signaling	Premises Interface Code	Feature Group A Basic Service Arrangement ALA	Feature Group B Basic Service Arrangement ATA 950	Feature Group C Basic Service Arrangement ATA NEA	Feature Group D Basic Service Arrangement ATA XXX
2	LO, GO	4SF2	X			
	LO, GO	4SF3	X			
	LO	4LS2	X			
	LO	4LS3	X			
	LO	6LS2	X			
	GO	4GS2	X			
	GO	4GS3	X			
	GO	6GS2	X			
	LO, GO	4DX2	X			
	LO, GO	4DX3	X			
	LO, GO	6EA2-E	X			
	LO, GO	6EA2-M	X			
	LO, GO	8EB2-E	X			
	LO, GO	8EB2-M	X			
	LO, GO	6EX2-B	X			
	RV, EA, EB, EC	4SF2		X	X	X
	RV, EA, EB, EC	4SF3		X		
	RV, EA, EB, EC	4DX2		X	X	X
	RV, EA, EB, EC	4DX3		X		
	RV, EA, EB, EC	6DX2			X	
	RV, EA, EB, EC	6EA2-E		X	X	X
	RV, EA, EB, EC	6EA2-M		X	X	X
	RV, EA, EB, EC	8EB2-E		X	X	X
	RV, EA, EB, EC	8EB2-M		X	X	X

(This page filed under Transmittal No. 1)

15. Interface Groups, Transmission Specifications and Channel Interfaces (Cont'd)

15.1 Local Transport Interface Groups (Cont'd)

15.1.11 Available Premises Interface Codes (Cont'd)

Interface Group	Telephone Company Switch Supervisory Signaling	Premises Interface Code	Feature Group A Basic Service Arrangement ALA	Feature Group B Basic Service Arrangement ATA 950	Feature Group C Basic Service Arrangement ATA NEA	Feature Group D Basic Service Arrangement ATA XXX
2 (Cont'd)	EA, EB, EC	8EC2-M			X	X
	RV	4RV2-O		X	X	X
	RV	4RV2-T		X	X	X
	RV	4RV3-O		X	X	
	RV	4RV3-T		x	X	
3	LO, GO	4AH5-B	X			
	RV, EA, EB, EC	4AH5-B		X	X	X
4*	LO, GO	4AH6-C	X			
	RV, EA, EB, EC	4AH6-C		X	X	X
5*	LO, GO	4AH6-D	X			
	RV, EA, EB, EC	4AH6-D		X	X	X
6	LO, GO	4DS9-15	X			
	LO, GO	4DS9-15L	X			
	RV, EA, EB, EC	4DS9-15		X	X	X
	RV, EA, EB, EC	4DS9-15L		X	X	X
7*	LO, GO	4DS9-31	X			
	RV, EA, EB, EC	4DS9-31		X	X	X
	LO, GO	4DS9-31L	X			
	RV, EA, EB, EC	4DS9-31L		X	X	X

* Interface groups 4, 5, and 7 are only available when ordered in conjunction with Feature Groups. They are not available with Basic Service Arrangements.

15. Interface Groups, Transmission Specifications and Channel Interfaces (Cont'd)

15.1 Local Transport Interface Groups (Cont'd)

15.1.11 Available Premises Interface Codes (Cont'd)

Interface Group	Telephone Company Switch Supervisory Signaling	Premises Interface Code	Feature Group A Basic Service Arrangement ALA	Feature Group B ATA 950	Feature Group C ATA NEA	Feature Group D ATA XXX
8*	LO, GO	4DSO-63	X			
	LO, GO	4DSO-63L	X			
	RV, EA, EB, EC	4DSO-63		X	X	X
	RV, EA, EB, EC	4DSO-63L		X	X	X
9	LO, GO	4DS6-44	X			
	LO, GO	4DS6-44L	X			
	RV, EA, EB, EC	4DS6-44		X	X	X
	RV, EA, EB, EC	4DS6-44L		X	X	X
10*	LO, GO	4DS6-27	X			
	LO, GO	4DS6-27L	X			
	RV, EA, EB, EC	4DS6-27		X	X	X
	RV, EA, EB, EC	4DS6-27L		X	X	X

15.1.12 Supervisory Signaling

For Interface Groups 1 and 2

DX Supervisory Signaling.
E&M Type I Supervisory Signaling,
E&M Type II Supervisory Signaling, or
E&M Type III Supervisory Signaling

For Interface Group 2

SF Supervisory Signaling, or
Tandem Supervisory Signaling

* Interface groups 8 and 10 are only available when ordered in conjunction with Feature Groups. They are not available with Basic Service Arrangements.

(This page filed under Transmittal No. 1)

15. Interface Groups, Transmission Specifications and Channel Interfaces (Cont'd)

15.1 Local Transport Interface Groups (Cont'd)

15.1.12 Supervisory Signaling (Cont'd)

For Interface Groups 6 and 10

These Interface Groups may, at the option of the customer, be provided with individual transmission path SF supervisory signaling where such signaling is available in Utility central offices. Generally such signaling is available only where the entry switch provides an analog, i.e., nondigital, interface to the transport termination.

15. Interface Groups, Transmission Specifications and Channel Interfaces (Cont'd)

15.2 Transmission Specifications Switched Access Service

15.2.1 Standard Transmission Specifications

Following are descriptions of the Standard Transmission Specifications available with Basic Service Arrangements Switched Access Service Feature Groups. The specific applications in terms of the Service Arrangements or Feature Groups and Interface Groups with which the Switched Access Standard Transmission Specifications are provided as set forth in 6.2.1.C, 6.2.2.C, 6.2.3.C and 6.2.4.C preceding.

(A) Type A Transmission Specifications

Type A Transmission Specifications are provided with the following parameters:

(1) Loss Deviation

The maximum Loss Deviation of the 1004 Hz loss relative to the Expected Measure Loss (EML) is ± 2.0 dB.

(This page filed under Transmittal No. 1)

15. Interface Groups, Transmission Specifications and Channel Interfaces (Cont'd)

15.2 Transmission Specifications Switched Access Service (Cont'd)

15.2.1 Standard Transmission Specifications (Cont'd)

(A) Type A Transmission Specifications (Cont'd)

(2) Attenuation Distortion

The maximum Attenuation Distortion in the 404 to 2804 Hz frequency band relative to the loss at 1004 Hz is -1.0 dB to + 3.0 dB.

(3) C-Message Noise

The maximum C-Message Noise for the transmission path at the route miles listed is less than or equal to:

Route Miles	C-Message Noise
less than 50	32 dBrnCO
51 to 100	34 dBrnCO
101 to 200	37 dBrnCO
201 to 400	40 dBrnCO
401 to 1000	42 dBrnCO

(4) C-Notch Noise

The maximum C–notch noise, utilizing a -16 dBmO holding tone, is less than or equal to 45 dBrnCO.

15. Interface Groups, Transmission Specifications and Channel Interfaces (Cont'd)

15.2 Transmission Specifications Switched Access Service (Cont'd)

15.2.1 Standard Transmission Specifications (Cont'd)

(A) Type A Transmission Specifications (Cont'd)

(5) Echo Control

Echo Control, identified as Equal Level Echo Path Loss, and expressed as Echo Return Loss and Singing Return Loss, is dependent on the routing, i.e., whether the service is routed directly from the customer's point of termination (POT) to the end office or via an access tandem. It is equal to or greater than the following:

	Echo Return Loss	Singing Return Loss
POT to Access Tandem	21 dB	14 dB
POT to End Office		
Direct	N/A	N/A
Via Access Tandem	16 dB	11 dB

15. Interface Groups, Transmission Specifications and Channel Interfaces (Cont'd)

15.2 Transmission Specifications Switched Access Service (Cont'd)

15.2.1 Standard Transmission Specifications (Cont'd)

(A) Type A Transmission Specifications (Cont'd)

(6) Standard Return Loss

Standard Return Loss, expressed as Echo Return Loss and Singing Return Loss, on two-wire ports of a four-wire point of termination shall be equal to or greater than:

Echo Return Loss	Singing Return Loss
5 dB	2.5 dB

(B) Type A Transmission Specifications

Type B Transmission Specifications are provided with the following parameters:

(1) Loss Deviation

The maximum Loss Deviation of the 1004 Hz loss relative to the Expected Measured Loss (EML) is ± 2.5 dB.

(2) Attenuation Distortion

The maximum Attenuation Distortion in the 404 to 2804 Hz frequency bank relative to loss at 1004 Hz is -2.0 dB to +4.0 dB.

(This page filed under Transmittal No. 1)

15. Interface Groups, Transmission Specifications and Channel Interfaces (Cont'd)

15.2 Transmission Specifications Switched Access Service (Cont'd)

15.2.1 Standard Transmission Specifications (Cont'd)

(B) Type B Transmission Specifications (Cont'd)

(3) C-Message Noise

The maximum C-message Noise for the transmission path at the route miles listed is less than or equal to:

	C-Message Noise*	
Route Miles	Type B1	Type B2
less than 50	32 dBrnCO	35 dBrnCO
51 to 100	33 dBrnCO	37 dBrnCO
101 to 200	35 dBrnCO	40 dBrnCO
201 to 400	37 dBrnCO	43 dBrnCO
400 to 10	39 dBrnCO	45 dBrnCO

(4) C-Notch Noise

The maximum C-Notch Noise, utilizing a -16 dBm0 holding tone is less than or equal to 47 dBrnCO.

(5) Echo Control

Echo Control, identified as Impedance Balance for ALA or FGA and ATA950 or FGB and Equal Level Echo Path Loss for ATANEA and ATAXXX, FGC and FGD and expressed as Echo Return Loss (ERL) and Singing Return Loss (SRL), is dependent on the routing, i.e., whether the service is routed directly from the customer's Point of Termination (POT) to the end office

* For access trunk arrangements NEA and XXX or for FGC and FGD only Type B2 will be provided. For Access Line arrangement or Access Trunk Arrangement 950 or for FGA and B, Type B1 or B2 will be provided as set forth in Technical Reference TR–NPL–000334.

(This page filed under Transmittal No. 1)

15. Interface Groups, Transmission Specifications and Channel Interfaces (Cont'd)

15.2 Transmission Specifications Switched Access Service (Cont'd)

15.2.1 Standard Transmission Specifications (Cont'd)

(B) Type B Transmission Specifications (Cont'd)

(5) Echo Control (Cont'd)

or via an access tandem. The ERL and SRL also differ by Access Arrangement or Feature Group, type of termination, and type of transmission path. They are greater than or equal to the following:

	Echo Return Loss	Singing Return Loss
POT to Access Tandem		
- Terminated in 4-Wire trunk	21 dB	14 dB
- Terminated in 2-Wire trunk	16 dB	11 dB
POT to End Office		
- Direct	16 dB	11 dB
- Via Access Tandem		
o For ATA950 or FGB Access	8 dB	4 dB
o For ATANEA or FGC Access (Effective 4-Wire transmission path at end office)		
o For ATANEA or FGC Access (Effective 4-Wire transmission path at end office)	16 dB	11 dB
	13 dB	6 dB

(This page filed under Transmittal No. 1)

15. Interface Groups, Transmission Specifications and Channel Interfaces (Cont'd)

15.2 Transmission Specifications Switched Access Service (Cont'd)

15.2.1 Standard Transmission Specifications (Cont'd)

(B) Type A Transmission Specifications (Cont'd)

(6) Standard Return Loss

Standard Return Loss, expressed as Echo Return Loss and Singing Return Loss, on two-wire ports of a four-wire point of termination shall be equal to or greater than:

Echo Return Loss	Singing Return Loss
5 dB	2.5 dB

(C) Type C Transmission Specifications

Type C Transmission Specifications are provided with the following parameters:

(1) Loss Deviation

The maximum Loss Deviation of the 1004 Hz loss relative to the Expected Measured Loss (EML) is ± 3.0 dB.

(2) Attenuation Distortion

The maximum attenuation distortion in the 404 to 2804 Hz frequency bank relative to loss at 1004 Hz is –2.0 dB to +5.5 dB.

(This page filed under Transmittal No. 1)

15. Interface Groups, Transmission Specifications and Channel Interfaces (Cont'd)

15.2 Transmission Specifications Switched Access Service (Cont'd)

15.2.1 Standard Transmission Specifications (Cont'd)

(C) Type C Transmission Specifications (Cont'd)

(3) C-Message Noise

The maximum C-message Noise for the transmission path at the route miles listed is less than or equal to:

C-Message Noise*

Route Miles	Type C1	Type C2
less than 50	32 dBrnCO	38 dBrnCO
51 to 100	33 dBrnCO	39 dBrnCO
101 to 200	35 dBrnCO	41 dBrnCO
201 to 400	37 dBrnCO	43 dBrnCO
400 to 1000	39 dBrnCO	45 dBrnCO

(4) C-Notch Noise

The maximum C-Notch Noise, utilizing a -16 dBmO holding tone is less than or equal to 47 dBrnCO.

* For Access Trunk Arrangements NEA and XXX or for FGC and FGD only Type C2 will be provided. For Access Line Arrangement or Access Trunk Arrangement 950 or for FGA and FGB, Type C! or C2 will be provided as set forth in Technical Reference PUB 62500.

15. Interface Groups, Transmission Specifications and Channel Interfaces (Cont'd)

15.2 Transmission Specifications Switched Access Service (Cont'd)

15.2.1 Standard Transmission Specifications (Cont'd)

(C) Type C Transmission Specifications (Cont'd)

(5) Echo Control

Echo Control, identified as Return Loss and expressed as Echo Return Loss and Singing Return Loss, is dependent on the routing, i.e., whether the service is routed directly from the customer's Point of Termination (POT) to the end office or via an access tandem. It is equal to or greater than the following:

	Echo Return Loss	Singing Return Loss
POT to Access Tandem	13 dB	6 dB
POT to End Office		
- Direct	13 dB	6 dB
- Via Access Tandem (for FGB only)	8 dB	4 dB

15.2.2 Data Transmission Parameters

Two types of Data Transmission Parameters, i.e., Type DA and Type DB, are provided for the Feature Group arrangements. The specific applications in terms of the Feature Groups with which they are provided are set forth in 6.2.1.(C.), 6.2.2.(C.), 6.2.3.(C.), and 6.2.4.(C.) preceding. Following are descriptions of each.

15. Interface Groups, Transmission Specifications and Channel Interfaces (Cont'd)

15.2 Transmission Specifications Switched Access Service (Cont'd)

15.2.2 Data Transmission Parameters (Cont'd)

(A) Data Transmission Parameters Type DA

(1) Signal to C-Notched Noise Ratio

The Signal to C-Notched Noise Ratio is equal to or greater than 33 dB.

(2) Envelope Delay Distortion

The maximum Envelope Delay Distortion for the frequency bands and route miles specified is:

	604 to 2804 Hz
less than 50 route miles	500 microseconds
equal to or greater than 50 route miles	900 microseconds

	1004 to 2404 Hz
less than 50 route miles	200 microseconds
equal to or greater than 50 route miles	400 microseconds

(3) Impulse Noise Counts

The Impulse Noise Counts exceeding a 65 dBrnCO threshold in 15 minutes is no more than 15 counts.

15. Interface Groups, Transmission Specifications and Channel Interfaces (Cont'd)

15.2 Transmission Specifications Switched Access Service (Cont'd)

15.2.2 Data Transmission Parameters (Cont'd)

(A) Data Transmission Parameters Type DA (Cont'd)

(4) Intermodulation Distortion

The Second Order (R2) and Third Order (R3) Intermodulation Distortion products are equal to or greater than:

Second Order (R2)	33 dB
Third Order (R3)	37 dB

(5) Phase Jitter

The Phase Jitter over the 4-300 Hz frequency band is less than or equal to 5° peak-to-peak.

(6) Frequency Shift

The maximum Frequency Shift does not exceed -2 to +2 Hz.

(B) Data Transmission Parameters Type DA

(1) Signal to C-Notched Noise Ratio

The signal to C–Notched Noise Ratio is equal to or greater than 30 dB.

15. Interface Groups, Transmission Specifications and Channel Interfaces (Cont'd)

15.2 Transmission Specifications Switched Access Service (Cont'd)

15.2.2 Data Transmission Parameters (Cont'd)

(B) Data Transmission Parameters Type DB (Cont'd)

(2) Envelope Delay Distortion

The maximum Envelope Delay Distortion for the frequency bands and route miles specified is:

	604 to 2804 Hz
less than 50 route miles	800 microseconds
equal to or greater than 50 route miles	1000 microseconds

	1004 to 2404 Hz
less than 50 route miles	320 microseconds
equal to or greater than 50 route miles	500 microseconds

(3) Impulse Noise Counts

The Impulse Noise Counts exceeding a 67 dBrnC0 threshold in 15 minutes is no more than 15 counts.

(4) Intermodulation Distortion

The Second Order (R2) and Third Order (R3) Intermodulation Distortion products are equal to or greater than:

Second Order (R2)	31 dB
Third Order (R3)	34 dB

(5) Phase Jitter

The Phase Jitter over the 4-300 Hz frequency band is less than or equal to 7° peak-to-peak.

(This page filed under Transmittal No. 1)

15. Interface Groups, Transmission Specifications and Channel Interfaces (Cont'd)

15.2 Transmission Specifications Switched Access Service (Cont'd)

15.2.2 Data Transmission Parameters (Cont'd)

(B) Data Transmission Parameters Type DB (Cont'd)

(6) Frequency Shift

The maximum Frequency Shift does not exceed -2 to +2 Hz.

15. Interface Groups, Transmission Specifications and Channel Interfaces (Cont'd)

15.3 Special Access Channel Interface and Network Channel Codes

This section explains the Channel Interface codes and Network Channel codes that the customer must specify when ordering Special Access Service. Included is an example which explains the specific characters of the code, a glossary of Channel Interface codes, impedance levels, Network Channel codes and compatible Channel Interfaces.

Example: If the customer specifies a NT Network Channel Code and a 2DC8-3 Channel Interface at the customer's premises, the following is being requested:

NT = Metallic Channel with a Predefined Technical Specification Package (1)
2 = Number of physical wires at customer premises
DC = Facility interface for direct current or voltage
8 = Variable impedance level
3 = Metallic facilities (DC continuity) for direct current low frequency control signals or slow speed data (30 baud)

15. Interface Groups, Transmission Specifications and Channel Interfaces (Cont'd)

15.3 Special Access Channel Interface and Network Channel Codes

15.3.1 Glossary of Channel Interface Codes and Options

Code	Option	Definition
AB -		accepts 20 Hz ringing signal at customer's point of termination
AC -		accepts 20 Hz ringing signal at customer's end user's point of termination
AH -		analog high capacity interface
-	B	60 khz to 108 khz (12 channels)
-	C	312 khz to 552 khz (60 channels)
-	D	564 khz to 3084 khz (600 channels)
CC -		Contact closure EC provided dry contact closure toward interface
CT -		Centrex Tie Trunk Termination
DA -		data stream in VF frequency band at customer's end user's point of termination
DB -		data stream in VF frequency band at customer's point of termination
DD -		DATAPHONE Select-A-Station (and TABS) interface at customer's point of termination
DE -		DATAPHONE Select-A-Station (and TABS) interface at the customer's end user's point of termination
DM –		Data stream in the VF band at CO location, interface at data modem in CO
	2	1200 Bps 212AR type modem operation
	3	1200 Bps 202T type modem operation
DS -		Digital hierarchy interface
	15	1.544 Mbps (DS1) format per PUB 41451 plus D4
	15E	8–bit PCM encoded in one 64 kbps of the DS1 signal
	15F	8–bit PCM encoded in two 64 kbps of the DS1 signal

(This page filed under Transmittal No. 1)

15. Interface Groups, Transmission Specifications and Channel Interfaces (Cont'd)

15.3 Special Access Channel Interface and Network Channel Codes

15.3.1 Glossary of Channel Interface Codes and Options

Code	Option	Definition
-	15G	8-bit PCM encoded in three 64 kbps of the DS1 signal
-	15H	14/11-bit PCM encoded in six 64 kbps of the DS1 signal
-	15J	1.544 Mbps format per PUB 41451
-	15K	1.544 Mbps format per PUB 41451 plus extended
-		framing format
-	15L	1.544 Mbps (DS1) with SF signaling
-	27	274.176 Mbps (DS4)
-	27L	274.176 Mbps (DS4) with SF signaling
-	31	3.152 Mbps (DS1C)
-	31L	3.152 Mbps (DS1C) with SF signaling
-	44	44.736 Mbps (DS3)
-	44L	44.736 Mbps (DS3) with SF signaling
-	63	6.312 Mbps (DS2)
-	63	6.312 Mbps (DS2) with SF signaling
DU -		digital access interface
-	24	2.4 kbps
-	48	4.8 kbps
-	56	56.0 kbps
-	56A	64 kbps
-	96	9.6 kbps
-	A	1.544 Mbps format per PUB 41451
-	B	1.544 Mbps format per PUB 41451 plus D4
-	C	1.544 Mbps format per PUB 41451 plus extended framing format
DX -		duplex signaling interface at customer's point of termination

(This page filed under Transmittal No. 1)

15. Interface Groups, Transmission Specifications and Channel Interfaces (Cont'd)

15.3 Special Access Channel Interface and Network Channel Codes

15.3.1 Glossary of Channel Interface Codes and Options

Code	Option	Definition
DY -		duplex signaling interface at customer's end user's point of termination
EA -	E	Type I E&M Lead Signaling. Customer at POT or customer's end user at POT originates on E Lead.
EA -	M	Type I E&M Lead Signaling. Customer at POT or customer's end user at POT originates on M Lead.
EB -	E	Type II E&M Lead Signaling. Customer at POT or customer's end user at POT originates on E Lead.
EB -	M	Type II E&M Lead Signaling. Customer at POT or customer's end user at POT originates on M Lead.
EC -		Type III E&M signaling at customer POT
EX -	A	tandem channel unit signaling for loop start or ground start and customer supplies open end (dial tone, etc.) functions.
EX -	B	tandem channel unit signaling for loop start or ground start and customer supplies closed end (dial pulsing, etc.) functions.
GO -		ground start loop signaling - open end function by customer or customer's end user
GS -		ground start loop signaling - closed end function by customer or customer's end user
LA -		end user loop start loop signaling - Type A OPS registered port open end
LB -		end user loop start loop signaling - Type B OPS registered port open end

15. Interface Groups, Transmission Specifications and Channel Interfaces (Cont'd)

15.3 Special Access Channel Interface and Network Channel Codes

15.3.1 Glossary of Channel Interface Codes and Options

Code	Option	Definition
LC -		end user loop start loop signaling - Type C OPS registered port open end
LO -		loop start loop signaling - open end function by customer or customer's end user
LR -		20 Hz automatic ringdown interface at customer with Utility provided PLAR
LS -		loop start loop signaling - closed end function by customer or customer's end user
NO -		no signaling interface, transmission only
PG -		program transmission - no dc signaling
-	1	nominal frequency from 50 to 15000 Hz
-	3	nominal frequency from 200 to 3500 Hz
-	5	nominal frequency from 100 to 5000 Hz
-	8	nominal frequency from 50 to 8000 Hz
PR		protective relaying*
RV -	0	reverse battery signaling, one way operation, originate by customer
-	T	reverse battery signaling, one way operation, terminate function by customer or customer's end user
SF -		single frequency signaling with VF band at either customer POT or customer's end user POT
TF -		telephotograph interface

* Available only for the transmission of audio tone protective relaying signals used in the protection of electric power systems during fault conditions.

(This page filed under Transmittal No. 1)

15. Interface Groups, Transmission Specifications and Channel Interfaces (Cont'd)

15.3 Special Access Channel Interface and Network Channel Codes

15.3.1 Glossary of Channel Interface Codes and Options

Code	Option	Definition
TV -		television interface
-	1	combined (diplexed) video and one audio signal
-	2	combined (diplexed) video and two audio signals
-	5	video plus one (or two) audio 5 kHz signal(s) or one (or two) two wire
-	15	video plus one (or two) audio 15 kHz signal(s)

15.3.2 Impedance

The nominal reference impedance with which the channel will be terminated for the purpose of evaluating transmission performance:

Value (ohms)	Code(s)
110	0
150	1
600	2
900	3+
135	5
75	6
124	7
Variable	8
100	9

\+ For those interface codes with a 4–wire transmission path at the customer designated POT, rather than a standard 900 ohm impedance, the code (3) denotes a customer provided transmission equipment termination. Such terminations were provided to customers in accordance with the F.C.C. Docket No. 20099 Settlement Agreement.

(This page filed under Transmittal No. 1)

15. Interface Groups, Transmission Specifications and Channel Interfaces (Cont'd)

15.3 Special Access Channel Interface and Network Channel Codes

15.3.3 Digital Hierarchy Channel Interface Codes (4DS)

Customers selecting the multiplexed four-wire DSX-1 or higher facility interface option at the customer designated premises will be requested to provide subsequent system and channel assignment data. The various digital bit rates in the digital hierarchy employ the channel interface code 4DS8, 4DS0 or 4DS6 plus the speed options indicated below:

Interface Code and Speed Option	Nominal Bit Rate (Mbps)	Digital Hierarchy Level
4DS8-15	1.544	DS1
4DS8-31	3.152	DS1C
4DS0-63	6.312	DS2
4DS6-44	44.736	DS3
4DS6-27	274.176	DS4

15.3.4 Service Designator/Network Channel Code Conversion Table

The purpose of this table is to show the relationship between the service designator codes (e.g. VGC, MT2, etc.) and the network channel codes that are used for:

Service Designator Code	Network Channel Code
MTC	MQ
MT1	NT
MT2	NU
MT3	NV
TGC	NQ

15. Interface Groups, Transmission Specifications and Channel Interfaces (Cont'd)

15.3 Special Access Channel Interface and Network Channel Codes

15.3.4 Service Designator/Network Channel Code Conversion Table (Cont'd)

Service Designator Code	Network Channel Code
VGC	LQ
VGW	SE
VG1	LB
VG2	LC
VG3	LD
VG4	LE
VG5	LF
VG6	LG
VG7	LH
VG8	LJ
VG9	LK
VG10	LN
VG11	LP
VG12	LR
APC	PQ
AP1	PE
AP2	PF
AP3	PJ
AP4	PK
TVC	TQ
TV1	TV
TV2	TW
DA1	XA

(This page filed under Transmittal No. 1)

15. Interface Groups, Transmission Specifications and Channel Interfaces (Cont'd)

15.3 Special Access Channel Interface and Network Channel Codes (Cont'd)

15.3.4 Service Designator/Network Channel Code Conversion Table (Cont'd)

Service Designator Code	Network Channel Code
DA2	XB
DA3	XG
DA4	XH
HC0	HS
HC1	HC
HC1C	HD
HC2	HE
HC3	HF
HC4	HG

(This page filed under Transmittal No. 1)

15. Interface Groups, Transmission Specifications and Channel Interfaces (Cont'd)

15.3 Special Access Channel Interface and Network Channel Codes (Cont'd)

15.3.5 Compatible Channel Interfaces

(C) Voice Grade

Compatible CIs		Compatible Cis		Compatible CIs	
2AB2	2AC2	2DB2	2DA2	2LR2	2LR2
2AB3	2AC2	2DB3	2DA2	2LR3	2LR2
2CT3	2DY2	2DX3	2LA2	2LS	2GS
	4DS8*	2LB2	2LS		
	4DX2		2LC2		4GS
	4DX3		2L03		4LS
	4DY2		2LS2		
	4EA2-E	2LS3	2LS2	2LA2	
	4EA2-M	2LB2			
	4SF2	2G02	2GS2		2LC2
	4SF3		2GS3		
	6DX2		2LS3	2LA2	
	6DY2	2G03	2GS2		2LB2
	6DY3		2GS3		2LC2
	6EA2-E				
	6EA2-M	2GS	2GS	2N02	2DA2
	6EB2-E	2LS	2N02		
	6EB2-M	4GS			
	6EB3-E	4LS	2N03	2N02	
	8EB2-E		2PR2		
	8EB2-M	2L02	2LS2		
	8EC2		2LS3	2TF3	2TF2
	9DY2				
	9DY3	2L03	2LS2		
	9EA2		2LS3		
	9EA3				

* See 15.3.3 preceding for explanation

(This page filed under Transmittal No. 1)

15. Interface Groups, Transmission Specifications and Channel Interfaces (Cont'd)

15.3 Special Access Channel Interface and Network Channel Codes (Cont'd)

15.3.5 Compatible Channel Interfaces (Cont'd)

(C) Voice Grade (Cont'd)

Compatible CIs		Compatible CIs		Compatible CIs	
4AB2	2AC2	4DS8-*	2AC2	4DS8*	4DG2
	4AB2		2DA2		4LR2
	4AC2		2DY2		4LS2
	4SF2		2G02		4N02
			2G03		4PR2
4AB3	2AC2		2GS2		4RV2-T
	4AC2		2GS3		4SF2
	4SF2		2LA2		4SF3
			2LB2		4TF2
4AC2	2AC2		2LC2		6DA2
	4AC2		2L02		6DY2
			2L03		6DY3
4DA2	4DA2		2LR2		6EA2-E
			2LS2		6EA2-M
4DB2	2DA2		2LS3		6EB2-E
	2N02		2N02		6EB2-M
	2PR2		2PR2		6GS-2
	4DA2		2RV2-T		6LS2
	4DB2		2TF2		8EB2-E
	4N02		4AC2		8EB2-M
	4PR2		4DA2		9DY2
	6DA2		4DE2		9DY3
			4DX2		9EA2
4DD3	2DE2		4DX3		9EA3
	4DE2		4DY2		
			4EA2-E		
			4EA2-M		

* See 15.3.3 for explanation.

(This page filed under Transmittal No. 1)

15. Interface Groups, Transmission Specifications and Channel Interfaces (Cont'd)

15.3 Special Access Channel Interface and Network Channel Codes (Cont'd)

15.3.5 Compatible Channel Interfaces (Cont'd)

(C) Voice Grade (Cont'd)

Compatible CIs		Compatible CIs		Compatible CIs	
4DX2	2DY2	4DX2	8EB2-E	4DX3	8EB2-M
	2LA2		8EB2-M		
	2LB2		9DY2		9DY2
	2LC2		9DY3		9DY3
	2L03		9EA2		9EA2
	2LS2		9EA3		9EA3
	2LS3				
	2LV2-T	4DX3	2DY2		
	2RX2		2LA2	4DY2	2DY2
	4DY2		2LB2		4DY2
	4DA2-E		2LC2		
	4EA2-M		2L03		
	4LS2		2LS2		
	4RV2-T		2LS3		
	4SF2		2RV2-T		
	4SF3		4DX2		
	6DY2		4DX3		
	6DY3		4DY2		
	6EA2-E		4EA2-E		
	6EA2-M		4EA2-M		
	6EB2-E		4LS2		
	6EB2-M		4RV2-T		
	6LS2		4SF2		
			4SF3		
			6DY2		
			6DY3		
			6EA2-E		
			6EA2-M		
			6EB2-E		
			6EB2-M		
			6LS2		
			8EB2-E		

15. Interface Groups, Transmission Specifications and Channel Interfaces (Cont'd)

15.3 Special Access Channel Interface and Network Channel Codes (Cont'd)

15.3.5 Compatible Channel Interfaces (Cont'd)

(C) Voice Grade (Cont'd)

Compatible CIs		Compatible CIs		Compatible CIs	
4EA2-E	2DY2	4EA3-E	2DY2	4G02	2G02
	4DY2		4DY2		2G03
	4EA2-E		4EA2-E		2GS2
	4EA2-M		4EA2-M		2GS3
	4SF2		4SF2		4GS2
	6DY2		6DY2		4SF2
	6DY3		6DY3		6GS2
	6EB2-E		6EA2-E		
	6EB2-M		6EA2-M	4G03	2G02
	8EB2-E		6EB2-E		2GS2
	8EB2-M		6EB2-M		2GS3
	9DY2		8EB2-E		4GS2
	9DY3		8EB2-M		4SF2
			9DY2		6GS2
4EA2-M	2DY2		9DY3		
	4DY2		9EA2		
	4EA2-M		9EA3	4GS	2GS
	4SF2				2LS
	6DY2				4GS
	6DY3				4LS
	6EB2-E				
	6EB2-M				
	8EB2-E				
	8EB2-M				
	9DY2				
	9DY3				

(This page filed under Transmittal No. 1)

15. Interface Groups, Transmission Specifications and Channel Interfaces (Cont'd)

15.3 Special Access Channel Interface and Network Channel Codes (Cont'd)

15.3.5 Compatible Channel Interfaces (Cont'd)

(C) Voice Grade (Cont'd)

Compatible CIs		Compatible CIs		Compatible CIs	
4L02	2LS2	4LS3	2LA2	4SF2	2L03
	2LS3		2LB2		2LR2
	4LS2		2LC2		2LS2
	4SF2		2L02		2LS3
	6LS2		2L03		2RV2-T
			4SF2		4AC2
4L03	2LS2				4DY2
	2LS3	4N02	2DA2		4LS2
	4LS2		2DE2		2RV2-T
	4SF2		2N02		4SF2
	6LS2		4DA2		6DY2
			4DE2		6DY3
4LR2	2LR2		4N02		6GS2
	4LR2		6DA2		9DY2
	4SF2				9DY3
		4RV2-0	2RV2-T		
4LR3	2LR2		4RV2-T	4SF3	2DY2
	4LR2		4SF2		2G03
	4SF2				2GS2
		4SF2	2AC2		2GS3
4LS	2GS		2DY2		2LA2
	2LS		2GS2		2LB2
	2GS		2GS3		2LC2
	2LS		2LA2		2L03
			2LB2		2LR2
			2LC2		
4LS2	2LA2				
	2LB2				
	2LC2				
	2L02				
	2L03				

15. Interface Groups, Transmission Specifications and Channel Interfaces (Cont'd)

15.3 Special Access Channel Interface and Network Channel Codes (Cont'd)

15.3.5 Compatible Channel Interfaces (Cont'd)

(C) Voice Grade (Cont'd)

Compatible CIs		Compatible CIs		Compatible CIs	
4SF3	2LS2	6DA	4DA2	6DY3	2DY2
	2LS3		6DA2		4DY2
	2RV2-T				6DY2
	4DY2	6DX2	2DY2		6DY3
	4EA2-E		4DY2		
	4EA2-M		4EA2-E	6EA2-E	2AC2
	4GS2				
	4LR2		4EA2-M		2DY2
	4LS2		4SF2		2LA2
	4RV2-T		6DY2		2LB2
	4SF2		6DY3		2LC2
	4SF3		6EA2-E		2L03
	6DY2		6EA2-M		2LS2
	6DY3		6EB2-E		2LS3
	6EB2-E		6EB2-M		2RV2-T
	6EB2-M		8EB2-E		4AC2
	6GS2		8EB2-M		4DY2
	6LS2		9DY2		4EA2-E
	9DY2		9DY3		4EA2-M
	9DY3		9EA2		4LS2
	9EA2		9EA3		4RV2-T
	9EA3				4SF2
		6DY2	2DY2		4SF3
4TF2	2TF2		4DY2		6DY2
	4TF2		6DY2		6DY3
					6EA2-E
					6EA2-M

(This page filed under Transmittal No. 1)

15. Interface Groups, Transmission Specifications and Channel Interfaces (Cont'd)

15.3 Special Access Channel Interface and Network Channel Codes (Cont'd)

15.3.5 Compatible Channel Interfaces (Cont'd)

(C) Voice Grade (Cont'd)

Compatible CIs		Compatible CIs		Compatible CIs	
6EA2-E	6EB2-E	6EA2-M	6DY2	6EB3-2	2DY2
	6EB2-M		6DY3		4DY2
	6LS2		6EA2-M		4EA2-E
	8EB2-E		6EB2-E		4EA2-M
	8EB2-M		6EB2-M		4SF2
	9DY2		6LS2		6DY2
	9DY3		8EB2-E		6DY3
			8EB2-M		6EA2-E
6EA2-M	2AC2		9DY2		6EA2-M
	2DY2		9DY3		8EB2-E
	2LA2				8EB2-M
	2LB2	6EB2-E	2DY2		9DY2
	2LC2		4DY2		9DY3
	2L03		4SF2		9EA2
	2LS2		6DY2		9EA3
	2LS3		6DY3		
	2RV2-T		6EB2-E	6EX2-A	2GS2
	4AC2		6EB2-M		2GS3
	4DY2		9DY2		2LS2
	4EA2-E		9DY3		2LS3
	4EA2-M				4GS2
	4LS2	6EB2-M	2DY2		4LS2
	4RV2-T		4DY2		4SF2
	4SF2		4SF2		6GS2
	4SF3		6DY2		6LS2
			6DY3		
			6EB2-M		
			9DY2		
			9DY3		

(This page filed under Transmittal No. 1)

15. Interface Groups, Transmission Specifications and Channel Interfaces (Cont'd)

15.3 Special Access Channel Interface and Network Channel Codes (Cont'd)

15.3.5 Compatible Channel Interfaces (Cont'd)

(C) Voice Grade (Cont'd)

Compatible CIs		Compatible CIs		Compatible CIs	
6EX2-B	2G03	8EB2-E	2AC2	8EB2-M	2AC2
	2LA2		2DY2		2DY2
	2LB2		2LA2		2LA2
	2LC2		2LB2		2LB2
	2L02		2LC2		2LC2
	2L03		2L03		2L03
	2LR2		2LS2		2LS2
	4LR2		2LS3		2LS3
	4SF2		2RV2-T		2RV2-T
			4AC2		4AC2
6G02	2G02		4DY2		4DY2
	2GS2		4LS2		4LS2
	2GS3		4RV2-T		4RV2-T
	4GS2		4SF2		4SF2
	4SF2		4SF3		4SF3
	6GS2		6DY2		6DY2
			6DY3		6DY3
6L02	2LS2		6EB2-E		6EB2-E
	2LS3		6EB2-M		6EB2-M
	4LS2		6LS2		6LS2
	4SF2		8EB2-E		8EB2-M
	6LS2		8EB2-M		9DY2
			9DY2		9DY3
6LS2	2LA2		9DY3		
	2LB2				
	2LC2				
	2L02				
	2L03				
	4SF2				

15. Interface Groups, Transmission Specifications and Channel Interfaces (Cont'd)

15.3 Special Access Channel Interface and Network Channel Codes (Cont'd)

15.3.5 Compatible Channel Interfaces (Cont'd)

(C) Voice Grade (Cont'd)

Compatible CIs		Compatible CIs		Compatible CIs	
8EC2	2DY2	9DY2	2DY2	9EA3	2DY2
	4DY2		4DY2		4DY2
	4EA2-E		6DY2		4EA2-E
	4EA2-M		6DY3		4EA2-M
	4SF2		9DY2		6DY2
	6DY2				6DY3
	6DY3	9DY3	2DY2		6EA2-E
	6EA2-E		4DY2		6EA2-M
	6EA2-M		6DY2		6EB2-E
	6EB2-E		6DY3		6EB2-M
	6EB2-M		9DY2		8EB2-E
	8EB2-E		9DY3		8EB2-M
	8EB2-M				9DY2
	9DY2	9EA2	2DY2		9DY3
	9DY3		4DY2		9EA3
	9EA2		4EA2-E		
	9EA3		4EA2-M		
			6DY2		
			6DY3		
			6EA2-E		
			6EA2-M		
			6EB2-E		
			6EB2-M		
			8EB2-E		
			8EB2-M		
			9DY2		
			9DY3		
			9EA2		
			9EA3		

(This page filed under Transmittal No. 1)

15. Interface Groups, Transmission Specifications and Channel Interfaces (Cont'd)

15.3 Special Access Channel Interface and Network Channel Codes (Cont'd)

15.3.5 Compatible Channel Interfaces (Cont'd)

(D) Program Audio (Cont'd)

Compatible CIs		Compatible CIs	
2PG2-1	2PG1-1 2PG2-1	4DS8-15E	2PG1-3 2PG2-3
2PG2-3	2PG1-3 2PG2-3	4DS8-15F	2PG1-5 2PG2-5
2PG2-5	2PG1-5 2PG2-5	4DS8-15G	2PG1-8 2PG2-8
2PG2-8	2PG1-8 2PG2-8	4DS8-15H	2PG1-1 2PG2-1

(This page filed under Transmittal No. 1)

15. Interface Groups, Transmission Specifications and Channel Interfaces (Cont'd)

15.3 Special Access Channel Interface and Network Channel Codes (Cont'd)

15.3.5 Compatible Channel Interfaces (Cont'd)

(E) Video

	Compatible CIs		Compatible CIs		Compatible CIs
2TV6-1	4TV6-15 4TV7-15	4TV6-5	4TV6-5 4TV7-5	6TV6-5	6TV6-5 6TV7-5
2TV6-2	6TV6-15 6TV7-15	4TV6-15	4TV6-15 4TV7-15	6TV6-15	6TV6-15 6TV7-15
2TV7-1	4TV6-15 4TV7-15	4TV7-5	4TV6-5 4TV7-5	6TV7-5	6TV6-5 6TV7-5
2TV7-2	6TV6-15 6TV7-15	4TV7-15	4TV6-15 4TV7-15	6TV7-15	6TV6-15 6TV7-15

(This page filed under Transmittal No. 1)

15. Interface Groups, Transmission Specifications and Channel Interfaces (Cont'd)

15.3 Special Access Channel Interface and Network Channel Codes (Cont'd)

15.3.5 Compatible Channel Interfaces (Cont'd)

(F) Digital Data

Compatible CIs		Compatible CIs		Compatible CIs	
				4DU8-56	4DU5-56
4DS8-15	4DS8-15+	4DU5-24	4DU5-24	6DU5-24	6DU5-24
	4DU5-24	4DU5-48	6DU5-48	6DU5-48	6DU5-48
	4DU5-48			6DU5-56	6DU5-56
	4DU5-56	4DU5-96	4DU5-96	6DU5-96	6DU5-96
	4DU5-96				
	6DU5-24				
	6DU5-48				
	6DU5-96				

\+ Available only as a cross connect of two individual channels of 1.544–Mbps facilities at a Telephone Company hub.

(This page filed under Transmittal No. 1)

15. Interface Groups, Transmission Specifications and Channel Interfaces (Cont'd)

15.3 Special Access Channel Interface and Network Channel Codes (Cont'd)

15.3.5 Compatible Channel Interfaces (Cont'd)

(G) High Capacity

Compatible Cis		Compatible CIs	
4DS0-63	4DS0-63 4DU8-A,B or C 6DU8-A,B or C	4DS8-15J	4DU8-A 6DU8-A
4DS6-27	4DS6-27 4DU8-A,B or C 6DU8-A,B or C	4DS8-15K	4DU8-B 4DU8-C 6DU8-B 6DU8-C
4DS6-44 4DU8-A,B or C 6DU8-A,B or C	4DS6-44	4DS8-31	4DS8-31 4DU8-A,B or C 6DU8-A,B or C
4DS8-15	4DS8-15+ 4DU8-B 6DU8-8	4DU8-A,B or C	4DU8-A,B or C

\+ Available only as a cross connect of two individual channels of 1.544–Mbps facilities at a Telephone Company hub.

ACCESS SERVICE

	Page No.	
16. Reserved for Future Use	16-1	(N)

(This page filed under Transmittal No. 1)

ACCESS SERVICE

	Page No.	
17. Operating Territory of the Telephone Company	17-2	(N)

(This page filed under Transmittal No. 1)

17. Operating Territory of the Telephone Company

The operating territory of the Telephone Company is comprised of the following locations, defined by the names of rate centers, for the state of Nevada.

RATE CENTER	LATA
Acoma	720
Adobe Hill	720
Alamo	720
Amargosa	721
Angel Peak	721
Argenta	720
Atlas Precious Metals	720
Austin	720
Baker	720
Barclay	720
Battle Mountain	720
Battle Mountain Low Frequency Range Station	720
Battle Mountain Vortac Site	720
Bear Mountain	720
Beatty	721
Beatty Airport	721
Black Mountain	720
Blair Junction	720
Blue Diamond	721
Boulder City	721
Boyer Ranch	720
Cactus Flat	720
Caliente	720
Candelaria	720
Carico Valley	720
Carlin	720
Carrara	721
Carson City	720
Carson Plains	720
Carson Sink	720
Charleston	720
Churchill Butte	720
Clover Creek	720
Coaldale Nos.	720
Cobre	720
Coeur D'Alene Mines	720
Cold Springs	720
Columbus	720
Copper Canyon	720
Corn Creek	721
Cosgrave	720
Cottonwood Creek	721
Crescent Valley Toll Region	720
Crystal Bay	720
Currant Toll Region	720
Denio Toll Region	720
Desert Valley Toll Region	720
Diamond Valley Toll Region	720
Dicalite	720
Dixie Valley	720
Dolly Varden	720

(This page filed under Transmittal No. 1)

17. Operating Territory of the Telephone Company (Cont'd)

RATE CENTER	LATA	RATE CENTER	LATA
Eagle Ridge	720	Jean	721
Eldorado	721		
Elko	720	Kasock Mountain	720
Ely	720	Kimberly	720
Empire	720		
Eureka	720	Lages Station	720
		Lake Mead	721
Fallon	720	Lake Valley	720
Fergusons Station	720	Lamoille	720
Fernley	720	Las Vegas	721
Fish Creek	720	Lathrop Wells	721
Fish Lake Valley	720	Laughlin	721
FMC - Paradise Peak	720	Lee-Jiggs	720
Frenchmans Station	720	Lida Junction	720
		Logandale	721
Gabbs	720	Lovelock	720
Gardnerville	720	Lucky Day Mine	720
		Lund	720
Geiger	720	Mack Creek Nos.	720
Glenbrook	720	Maggie Creek	720
Glendale	721	Manhattan	720
Gold Creek	720		
Goldfield	720		
Gold Mountain	720		
Grayson Ranch	720	Mc Clellan Peak	720
Greely Crossing	720	Mc Clusky Peak	720
Hawthorne	720		
Henderson	721	Mc Cullough Range	720
Hot Creek Valley	721	Mc Dermitt	720
Hualapai	720	Mc Gill	720
		Mesquite	660
		Middle Gate	720
Imlay	720	Millers Corner	720
Independence Range	720	Mina	720
Indian Springs	721	Mina Aftac Seismic Station	720
Jackpot	652		

(This page filed under Transmittal No. 1)

17. Operating Territory of the Telephone Company (Cont'd)

RATE CENTER	LATA	RATE CENTER	LATA
Montello	721		
Montezuma	720		
Montgomery Pass	720	Pinto Creek	720
Moorman Ranch	720	Pioche	720
Mountain City	652	Pioche Transfer East	720
Mount Charleston	721	Pioche Transfer North	720
Mount Davidson	720	Pond Peak	720
Mount Lewis	720	Primeaux Station	720
Mount Moses	720	Pyramid Lake Toll Region	720
Mount Potosi	720	Rabbit Springs	720
Mount Tobin	720	Ragan Creek	720
Nelson	721	Railroad Valley	720
Nevada Test Site	721	Rainer	721
NTS Toll Region	721	Red Rock	720
Nixon	720	Reese Valley	720
North Fork	720	Reno	720
Oasis	720	Rhyolite	721
Orovada	720	Rib Hill	720
Owyhee	652	Riggs	720
Pahrump	721	Rodeo Creek	720
Palisade	721	Round Mountain	720
Panaca	720	Rowland	720
Paridise Valley	720	Ruby Valley	720
		Rutabaga	720
		Rye Patch	720
		Sand Springs	720
		Sandy Valley	721
		Sarcobatus Flat	720

(This page filed under Transmittal No. 1)

17. Operating Territory of the Telephone Company (Cont'd)

Sawmill Canyon	720	Sweetwater	720
Schurz	720	T Lazy S Ranch	720
Searchlight	721	Tenneco	720
Silver Peak	720	Tonopah	720
Silver Springs	720	Topaz Lake	720
Smith Valley	720	Toulon	720
Soda Springs	720	Trinity	720
		Tuscarora	720
		Twin Springs	720
Spotted Range	721	Upper Muddy	721
Spring Valley Toll Region	720	Virginia City	720
Squaw Mountain	720	Vista Mountain	720
Stateline (Douglas Co.)	720	Warm Springs Station	720
Summit Springs	720	Wells	720
		Wendover	660
		Winnemucca	720
Sutcliff	720	Yerington	720
			720

(This page filed under Transmittal No. 1)

ACCESS SERVICE

		Page No.	
18.	Expanded Interconnection Service	18-2	
18.1	General	18-2	
18.1.1	Service Description	18-2	
18.1.2	General Regulations	18-2	
18.2	Physical Expanded Interconnection Service	18-5	
18.3	Virtual Expanded Interconnection Service	18-12	
18.3.1	Basic Description	18-12	
18.3.2	Virtual Collocation for Interconnection to the Telephone Company	18-13	
18.3.3	Provisioning	18-18	
18.3.4	Collocator Responsibilities	18-19	
18.3.5		18-20	
18.3.6	Installation of Virtual Collocation Equipment	18-21	
18.3.7	Equipment Provisioning	18-22	
18.3.8	Repair of Equipment	18-22	
18.3.9	Maintenance of Equipment	18-23	
18.3.10	Alarm Collection	18-23	
18.3.11	Termination of Virtual Collocation	18-24	
18.3.12	Revisions	18-25	
18.3.13	Application Interval for Virtual Collocation	18-26	
18.3.14	Provisioning Interval for Virtual Collocation	18-27	
18.3.15	Rate Regulations	18-28	
18.4	Microwave Expanded Interconnection Service	18-35	
18.5	Ordering	18-36	
18.6	Obligations of the Telephone Company	18-44	
18.7	Obligations of the Customer	18-46	
18.8	Rate Regulations	18-48	
18.8.1	Description and Application of Rates and Charges	18-49	
18.8.2	Rates and Charges	18-52	(N)

(This page filed under Transmittal No. 1)

18. Expanded Interconnection Service

18.1 General

Expanded Interconnection Service (EIS) is available to customers who are placing central office equipment necessary to terminate basic transmission facilities, including optical terminating equipment and multiplexers, pursuant to Federal Communications Commission Report and Order and Notice of Proposed Rulemaking in CC Docket 91-141, released October 19, 1992 and the Second Report and Order and Third Notice of Proposed Rulemaking, released September 2, 1993.

18.1.1 Service Description

Expanded Interconnection Service provides a customer with space and associated requirements such as power and environmental conditioning within a Telephone Company serving wire center to locate certain fiber optic or microwave facilities and equipment, and a connection to certain Telephone Company provided Special Access High Capacity or Switched Access Services. EIS channel terminations will be DS1 and DS3 interconnections only. Additional Special Access service speeds may be sought via bona fide request. Switched Access Services will be provided via the EISCT for Switched Access.

18.1.2 General Regulations

The regulations described herein are supplemented by and in addition to the terms and conditions specified in the EIS Application, other sections of this tariff and other tariffs of the Telephone Company.

(A) Provisions

(1) EIS will be provided subject to the regulations, rates and charges contained in this tariff.

18. Expanded Interconnection Service (Cont'd)

18.1 General (Cont'd)

18.1.2 General Regulations (Cont'd)

(A) Provisions (Cont'd)

(2) The Telephone Company's obligation to provide EIS is contingent upon the Telephone Company's receipt of a separate signed Agreement and prepayment of the nonrecurring charges specified in Section 18.8.1.

(3) Subject to the availability of space and facilities in each Central Office, EIS will be available on a first-come first-served basis to collocators who provide their own fiber optic link or microwave to Telephone Company central offices designated as interconnection sites.

(4) EIS will be provided subject to the availability of space and facilities in each central office as designated in the National Exchange Carriers Association (NECA) Tariff F.C.C. No. 4. Expanded Interconnection Service will be made available upon bona fide request in additional offices, pursuant to the Commission's October 19, 1992 and September 2, 1993 Order in CC Docket 91-141. Within 45 days of receipt of a bona fide request for EIS Service in a Telephone Company Central Office not currently tariffed, the Telephone Company will tariff the requested central office, to become effective on 45 days notice.

18. Expanded Interconnection Service (Cont'd)

18.1 General (Cont'd)

18.1.2 General Regulations (Cont'd)

(A) Provisions (Cont'd)

(5) Shared use occurs when Special Access Service and Switched Access Service are provided over the same EIS Connection to Special Access. Rules for Shared Use for Special Access are described in Section 7.2.7, preceding.

The customer must place an order for each individual Switched Access Service utilizing the shared use EISCT and specify the channel assignment for each service, as appropriate.

Rates and Charges as described herein and 18.8.2 following will apply when each individual channel of the Shared Use EISCT is used to connect to Special Access Service. Rates and Charges as set forth herein and 18.8.2 will apply when each individual channel of the Shared Use EISCT is used to provide Switched Access Service. As each individual Switched Access service channel is activated, the EIS Connection to Special Access rates will be reduced accordingly, e.g., 1/24th for DS1 service and 1/672nd for DS3 service.

(6) The Telephone Company reserves the right to reclaim floor space, in use and/or pending use, as well as cable space or conduit space, from an EIS customer for any violations of those IS provisions outlined in 18.5 or 18.7 following. In the case of violations to those provisions outlined in 18.5 or 18.7, the customer will be notified and given an opportunity to cure the violation before service is terminated.

(7) Customers in existing condominium arrangements that seek to purchase EIS will not be required to route fiber optic facilities out of the building and back into the building. Such customers will be required to rent additional floor space and furnish it with appropriate electronic transmission equipment and fiber optic cable. Such customers will be required to compensate the Telephone Company for the cost of installing fiber optic cable from the entry point to the Interconnection Chamber.

Nevada Bell’s filing of this tariff page does not constitute a waiver of the Company’s right to appeal any issue arising from the FCC’s Second Report and Order in CC Docket No. 93-162, FCC 97-208.

(This page filed under Transmittal No. 1)

18. Expanded Interconnection Service (Cont'd)

18.1 General (Cont'd)

18.1.2 General Regulations (Cont'd)

(A) Provisions (Cont'd)

(8) The Interconnector may not assign or transfer the use of EIS; except where there is no interruption of use or relocation of the EIS; assignment or transfer may be made of the service to an affiliate or upon transfer of control, provided that the affiliate or party now assuming control has assumed of the collocator all outstanding indebtedness for and obligations associated with the EIS.

In all cases of assignment or transfer, the written acknowledgment shall be made within 15 days from the receipt of notification. All regulations and conditions contained in this tariff shall apply to such assignee or transferee.

(9) The Telephone Company will accept Letters of Authorization that authorize interconnector's customers to order and be billed for EIS Channel Termination.

18.2 Physical Expanded Interconnection Service

(A) Interconnection Chamber and Occupancy Provisions

An EIS customer may establish an Interconnection Chamber at each Telephone Company Central Office to which the customer constructs fiber optic interconnection cable(s). The Interconnection Chamber may be established subject to the following provisions:

(1) An Interconnection Chamber will be made available to each Interconnector in a minimum of 100 square foot increments, per central office. Additional space will be made available, where feasible, in a minimum of 100 square foot increments.

Nevada Bell's filing of this tariff page does not constitute a waiver of the Company's right to appeal any issue arising from the FCC's Second Report and Order in CC Docket No. 93-162, FCC 97-208.

(This page filed under Transmittal No. 1)

18. Expanded Interconnection Service (Cont'd)

18.2 Physical Expanded Interconnection Service (Cont'd)

(A) Interconnection Chamber and Occupancy Provisions (Cont'd)

(2) In addition to floor space, the Telephone Company will provide Preferred AC power, heat, air conditioning and other environmental supports to the EIS customer's Interconnection Chamber, in the same manner in which it provides such support times to its own equipment within that Central Office. Preferred DC power is available as an option at the EIS customer's request.

(3) The Telephone Company may enclose the EIS customer's Interconnection Chamber in an area or room in which the customer may locate the customer provided equipment needed to terminate basic transmission facilities, including optical terminating equipment and multiplexers.

(4) Prior to the installation of an EIS arrangement, the Telephone Company will work cooperatively with the interconnector to developplancs associated with the following EIS customer activities:
- entry point into the manhole
- entrance conduit
- routing of cables
- splice locations
- length of fiber (including innerduct)

(This page filed under Transmittal No. 1)

18. Expanded Interconnection Service (Cont'd)

18.2 Physical Expanded Interconnection Service (Cont'd)

(A) Interconnection Chamber and Occupancy Provisions (Cont'd)

(5) The Telephone Company will designate a Point of Termination (POT) within each interconnector's Customer Designated Premises which will be the physical demarcation point between the interconnector's equipment and the Telephone Company's equipment. The Telephone Company will be responsible for all installation, maintenance and related activities associated with its equipment up to the Point of Termination.

(This page filed under Transmittal No. 1)

18. Expanded Interconnection Service (Cont'd)

18.2 General Regulations (Cont'd)

(A) Interconnection Chamber and Occupancy Provisions (Cont'd)

(6) An interconnector must place EIS facilities/equipment in unused allocated Interconnection Chamber floor space within 180 days of receipt of notification by the Telephone Company of the need for the space or be subject to having the lease revoked by the Telephone Company.

(7) The Interconnector's equipment to be installed in the Interconnection Chamber must either be on the Telephone Company's list of approved products, or equipment that complies with the Bellcore Network Equipment Building System (NEBS), Generic Equipment Requirements (Documented in TR-EOP-000063) and Nevada Bell's Central Office Equipment Installation Job Acceptance Handbook and any statutory (local, state and/or federal) requirements in effect at the time or subsequent to equipment installation.

Nevada Bell’s filing of this tariff page does not constitute a waiver of the Company’s right to appeal any issue arising from the FCC’s Second Report and Order in CC Docket No. 93-162, FCC 97-208.

(This page filed under Transmittal No. 1)

18. Expanded Interconnection Service (Cont'd)

18.2 Physical Expanded Interconnection Service (Cont'd)

(A) Interconnection Chamber and Occupancy Provisions (Cont'd)

(9) The Telephone Company will permit the EIS customer's employees, agents and contractors, to have access to the areas where the EIS customer's Interconnection Chamber is located at all reasonable times, provided that the EIS customer's employees, agents and contractors comply with the policies and practices of the Telephone Company pertaining to fire, safety and security.

The Telephone Company will also permit the EIS customer's employees, agents and contractors to have access to the EIS customer's cable and associated equipment, e.g., repeaters.

Access to nonsecured areas will be provided via escort service, by designated Telephone Company personnel. Labor rates as set in Section 13 preceding, will apply. This will apply for access to riser cable, cableways, and any room or area through which necessary access is available.

(10) EIS customers will not be permitted to resell or sublease their Interconnection Chamber space. EIS customers will not be permitted to interconnect facilities with another interconnector's facilities within the Telephone Company's Central Office.

(11) The EIS customer may use the Interconnection Chamber solely for the purpose of installing, maintaining, and operating the Interconnector's owned or leased equipment to terminate fiber transmission facilities which are used in providing interstate special access or switched transport services that interconnect with the Telephone Company's interstate access services.

18. Expanded Interconnection Service (Cont'd)

18.2 Physical Expanded Interconnection Service (Cont'd)

(A) Interconnection Chamber and Occupancy Provisions (Cont'd)

(12) Additional Space and Efficient Use of Space

(a) The initial space granted to Interconnector for the Interconnection Chamber is subject to requirement of 100 square feet. Additional space may be provided on an as needed basis where feasible if Interconnector's existing space is being "efficiently used" as defined in paragraph C below. Interconnector can request additional space, by ordering it in accordance with procedures set forth previously in this Section.

(b) Upon Interconnector's request, the Telephone Company will make best efforts to provide the additional space contiguous with the Interconnection Chamber. However, the Telephone Company makes no guarantee that additional space is available or that it will be contiguous. Where contiguous space is not reasonably available, customer may request direct cabling between non-contiguous Interconnection Chambers at rates specified in 18.8.2 following Cable and Innerduct Pull and Cable Splice. Interconnector may not reserve any additional space or any additional Cable or Conduit Spaces.

Nevada Bell’s filing of this tariff page does not constitute a waiver of the Company’s right to appeal any issue arising from the FCC’s Second Report and Order in CC Docket No. 93-162, FCC 97-208.

(This page filed under Transmittal No. 1)

18. Expanded Interconnection Service (Cont'd)

18.2 Physical Expanded Interconnection Service (Cont'd)

(A) Interconnection Chamber and Occupancy Provisions (Cont'd)

(12) Additional Space and Efficient Use of Space (Cont'd)

(c) For purposes of this arrangement, "efficiently used" shall mean that substantially all of the floor space is taken up by operating transmission equipment, placed no greater than 20% above the minimum distances permitted by NEBS. The determination as to whether or not this criterion is met is solely within the reasonable judgment of Telephone Company.

(d) After additional space is granted, the Interconnector must continue to "efficiently use" all previously occupied Interconnection Chamber space.

(13) In the event of catastrophic loss, resulting in damages to the central office and the customer's Interconnection Chamber, the Telephone Company will work cooperatively with the customer to notify them of the Company's plans to rebuild and/or repair physical collocation space as soon as is practicable.

(14) If at any time it becomes necessary for the Telephone Company to relocate the customer's Interconnection Chamber, the Company will make all reasonable efforts to minimize disruption of the customer's services. Reasons for relocation could include, but are not limited to unexpected growth, technological or regulatory changes, or other developments that are inherently unforeseeable. If it becomes necessary for the Company to relocate the customer to either a central office at a new location or to a new location within the current central office for reasons other than an immediate emergency, the Company will provide the customer with at least 180 days advance written notice.

Nevada Bell's filing of this tariff page does not constitute a waiver of the Company's right to appeal any issue arising from the FCC's Second Report and Order in CC Docket No. 93-162, FCC 97-208.

(This page filed under Transmittal No. 1)

18. Expanded Interconnection Service (Cont'd)

18.3 Virtual Collocation

18.3.1 Basic Description

This Section of the Access Service Tariff provides for Virtual Collocation for the purpose of interconnecting to the Telephone Company for the transmission and routing of telephone exchange service and exchange access pursuant to 47 U.S.C. §251 (c)(2).

The Telephone Company will offer, at the collocator's request, virtual collocation in central offices where physical collocation space is available or where physical collocation space is not available.

Virtual collocation will be provided wherein the Telephone Company maintains and repairs the virtually collocated equipment consistent with the terms and conditions and rates as provided for in Sections 18.3 and 18.8.2 of this tariff.

Virtual Collocation in the Central Office is available for interconnection with the Telephone Company for the transmission and routing of telephone exchange service and exchange.

The Telephone Company will exercise physical control over any equipment deployed for the purposes of Virtual Collocation.

A description of the rate categories applicable to Virtual Collocation for the purpose of interconnecting to the Telephone Company within the Telephone Company's Central Offices is contained in 18.3.15. (Rate Regulations).

18. Expanded Interconnection Service (Cont'd)

18.3 Virtual Collocation (Cont'd)

18.3.2 Virtual Collocation for Interconnection to the Telephone Company

Virtual Collocation provides for interconnection between the Telephone Company and the facilities of a virtual Collocator and is available for the transmission and routing of telephone exchange service and exchange access in the Telephone Company Central Offices.

Virtual Collocation is available at the Telephone Company wire centers as specified in the National Exchange Carrier Association, Inc., Tariff F.C.C. No. 4.

Virtually collocated equipment is available as follows:

(A) A Collocator shall purchase from the vendor the equipment to be virtually collocated subject to the provisions as set forth in 18.3.2(B) below and the equipment conforming to industry safety standards as described in the Telephone Company’s Technical Publication.

18. Expanded Interconnection Service (Cont'd)

18.3 Virtual Collocation (Cont'd)

18.3.2 Virtual Collocation for Interconnection to the Telephone Company (Cont'd)

(B) The Collocator may locate all equipment used or useful for interconnection to the Telephone Company under 47.U.S.C. 251 (C) (2), regardless of whether such equipment includes a switching functionality, provides enhanced services capabilities, or offers other functionalities. The Telephone Company will permit the collocation of equipment such as DSLAMs, routers, ATM multiplexers, and remote switching modules in the Telephone Company Central offices. The Telephone Company may not place any limitations on the ability of collocators to use all the features, functions, and capabilities of collocated equipment, including but not limited to, switching and routing features and functions. The collocator will certify in writing to the Telephone Company that the equipment is used or useful for interconnection. In the event that the Telephone Company believes that the collocated equipment will not be or is not being used for interconnection, the Collocator will be given ten (10) business days to comply with the requirements or remove the equipment from the collocation space. In the event that the parties do not resolve the dispute, the Telephone Company may file a complaint at the Commission seeking a formal determination that the equipment cannot be collocated in a the Telephone Company Central office. While the dispute is pending, the Telephone Company will not prevent or otherwise delay installation of the disputed equipment in the Collocation space.

18. Expanded Interconnection Service (Cont'd)

18.3 Virtual Collocation (Cont'd)

18.3.2 Virtual Collocation for Interconnection to the Telephone Company (Cont'd)

(B) (Cont'd)

Regarding safety, Collocator equipment or operating practices representing a significant demonstrable technical or physical threat to the Telephone Company's personnel, network or facilities, including the Eligible Structure, or those of others are strictly prohibited. Regarding safety and notwithstanding any other provision hereof, the characteristics and methods of operation of any equipment or facilities placed in the virtual collocation space shall not create hazards for or cause damage to those facilities, the virtual collocation space, or the Central Office in which the virtual collocation space is located; impair the privacy of any communications carried in, from, or through the Central Office in which the virtual collocation space is located; or create hazards or cause physical harm to any individual or the public. In the event that the Telephone Company believes that the collocated equipment does not meet the minimum safety standards above, the Collocator will be given ten (10) business days to comply with the requirements or remove the equipment from the collocation space. In the event that the parties do not resolve the dispute, the Telephone Company may file a complaint at the Commission seeking a formal determination that the equipment cannot be collocated in a the Telephone Company Central Office. While the dispute is pending, the Telephone Company will not prevent or otherwise delay installation of the disputed equipment in the Collocation space. Any of the foregoing would be in violation of this tariff.

18. Expanded Interconnection Service (Cont'd)

18.3 Virtual Collocation (Cont'd)

18.3.2 Virtual Collocation for Interconnection to the Telephone Company (Cont'd)

(B) (Cont'd)

The Telephone Company requires that all equipment to be collocated in the Telephone Company's Central Offices meet Level 1 safety requirements as set forth in the Telephone Company TP 76200MP, but the Telephone Company may not impose safety requirements on the collocators that are more stringent than the safety requirements it imposes on its own equipment. The Telephone Company may not deny collocation of collocator's equipment because the equipment fails to meet the Telephone Company TP76200MP reliability standards. In the event that the Telephone Company believes that the collocated equipment will not be or is not being used for interconnection or determines that the collocator's equipment does not meet the Telephone Company TP76200MP Level 1 Safety requirements, the collocator will be given ten (10) business days to comply with the requirements or remove the equipment from the collocation space. If the parties do not resolve the dispute, the Telephone Company or collocator may file a complaint at the Commission seeking a formal resolution of the dispute. If it is determined that the collocator's equipment is not the Telephone Company TP76200MP Level 1 Safety compliant, the Collocator will be responsible for removal of the equipment and all resulting damages.

18. Expanded Interconnection Service (Cont'd)

18.3.2 Virtual Collocation for Interconnection to the Telephone Company (Cont'd)

(C) A Collocator may arrange for a mutually agreed upon approved vendor/contractor to engineer and install the virtually collocated equipment the Collocator purchases and the Collocator may pay the vendor/contractor directly. The installation contractor and their activity will be under the direction and control of Collocator who will ensure that the installation contractor meets all standards and requirements for installation of equipment, as required under this Tariff. If the Telephone Company chooses to have its personnel present when the collocator equipment is installed, then the Telephone Company's presence will be at its own expense. However, if the Telephone Company demonstrates that the collocator contractor has or would have violated any standard or requirement for installation of equipment, as required under this tariff, collocator is responsible for the quantifiable expense incurred by the Telephone Company.

18. Expanded Interconnection Service (Cont'd)

18.3 Virtual Collocation (Cont'd)

18.3.3 Provisioning

The Telephone Company will designate the location or locations within its wire centers for the placement of all equipment and facilities associated with virtual collocation. Virtual collocation does not involve the reservation of segregated central office space for the use of collocators.

The Telephone Company will provide Virtual Collocation for comparable equipment as it provides to itself in the central office.

18. Expanded Interconnection Service (Cont'd)

18.3 Virtual Collocation (Cont'd)

18.3.4 Collocator Responsibilities

The Collocator will provide, under this section of the tariff, at its expense, all facilities and equipment required to facilitate interconnection. The customer will, at its expense, provide the following:

- All plug-ins and/or circuit packs (working, spare, and replacements),
- All unique tools and test equipment,
- Any ancillary equipment and cabling used for remote monitoring and control,
- Any technical publications and updates associated with all Collocator-owned and provided equipment,
- Any Product Change Notice (PCN) modifications, upgrades, and/or changes to their equipment,
- All training,
- All hard-wired equipment,
- A storage cabinet or designated shelf for storage of Collocator’s spare circuit packs, unique tools, test equipment, etc. used by the Telephone Company to maintain and repair virtually collocated equipment.

The Collocator will provide, at its expense, replacements for any recalled, obsolete, defective or damaged facilities, equipment, plug-ins, circuit packs, unique tools, test equipment, or any other item or material provided by the Collocator for placement in/on the Telephone Company property. Suitable replacements are to be immediately provided to the Telephone Company to restore equipment. The Collocator will provide at least the minimum number of usable equipment spares specified by the manufacturer.

18. Expanded Interconnection Service (Cont'd)

18.3 Virtual Collocation (Cont'd)

18.3.5 Collocator Responsibilities (Cont'd)

The Telephone Company will work cooperatively with the Collocator to develop implementation plans including timelines associated with:

- Placement of Collocator’s fiber into the central office vault,

- Location and completion of all splicing,

- Completion of installation of equipment and facilities and insuring that the installation vendor meets required safety standards as contained in TP 76200MP and TP 76300MP,

- Removal of above facilities and equipment,

- To the extent known, the Collocator can provide forecasted information to the Telephone Company on anticipated additional Virtual Collocation requirements,

- To the extent known, the Collocator is encouraged to provide the Telephone Company with a listing of the equipment types that they plan to virtually collocate in the Telephone Company central office. This cooperative effort will insure that the Telephone Company personnel are properly trained on Collocator equipment.

18. Expanded Interconnection Service (Cont'd)

18.3 Virtual Collocation (Cont'd)

18.3.6 Installation of Virtual Collocation Equipment

The Telephone Company does not assume any responsibility for the design, engineering, testing, or performance of the end-to-end connection of the Collocator's equipment, arrangement, or facilities.

The Telephone Company will be responsible for using the same engineering practices as it does for its own similar equipment in determining the placement of equipment and engineering routes for all connecting cabling between collocation equipment.

The Collocator will have the authority to select an approved installation vendors/contractors. All installations of equipment will be in accordance with TP 76300MP the Collocator-provided installation design and must comply with manufacturer's specifications and applicable published national standards approved by the FCC, and other governmental authorities that have jurisdiction.

The Collocator and the Telephone Company must jointly accept the installation of the equipment and facilities prior to the installation of any services using the equipment. As part of this acceptance, the Telephone Company will cooperatively test with the Collocator.

The Collocator will be allowed to visit the eligible structure with a Telephone Company escort once during the installation of virtually collocated equipment, once at turn-up completion of such equipment, and then one general visit per calendar year. The visits must be arranged 10 business days in advance. Charges for the escort will apply. A maximum of two Collocator's representatives may participate in any one site visit.

18. Expanded Interconnection Service (Cont'd)

18.3 Virtual Collocation (Cont'd)

18.3.7 Equipment Provisioning

The Collocator will deliver to the Telephone Company central office a reasonable number, as recommended by the manufacturer, of all appropriate plug-ins, circuit packs and cards and any other equipment, plus all necessary circuit design and provisioning information on an agreed-upon date which is no later than five (5) business days prior to the scheduled turn-up of the Collocator's equipment.

18.3.8 Repair of Equipment

Except in emergency situations, the Collocator-owned fiber optic facilities and central office terminating equipment will be repaired only upon the request of the Collocator. In an emergency, the Telephone Company may perform necessary repairs without prior notification. The labor rates specified in Section 18.8.4(A)(10) that apply to the Telephone Company central offices are applicable for all repairs performed by the Telephone Company on the Collocator's facilities and equipment.

When initiating repair requests on Collocator owned equipment, the Collocator must provide the Telephone Company with the following:

- Notification that the purpose of the call is to establish a virtual collocation trouble ticket,
- Eligible structure CLLI code,
- Location of virtually collocated equipment (bay, frame, shelf, circuit pack, location and type),
- A detailed description of the trouble,
- The name and telephone number of the Collocator's employee who will cooperatively test with the Telephone Company at no charge to the Telephone Company, and
- The type of trouble.

Upon notification by the Collocator and availability of spare parts as provided by the Collocator, the Telephone Company will be responsible for repairing the Virtually Collocated equipment at the same standards that it repairs its own equipment.

18. Expanded Interconnection Service (Cont'd)

18.3 Virtual Collocation (Cont'd)

18.3.9 Maintenance of Equipment

Collocator may request the Telephone Company to perform routine-maintenance and scheduled events, at mutually agreed upon times, which will be billed on a time and material basis as set forth in Section 18.8.2(A)(10). When requesting maintenance on Collocator owned equipment, Collocator shall provide the Telephone Company with location and identification of the equipment, a detailed description of the maintenance requested, and the estimated time required to perform the routine maintenance.

For routine maintenance and product upgrades covered by the manufacturer’s warranty, Collocator will contact the Telephone Company to arrange access for the manufacturer’s warranty, the Telephone Company shall perform repairs as described herein.

Upon notification by the Collocator and availability of spare parts as provided by the Collocator, the Telephone Company will be responsible for repairing and maintaining the virtually collocated equipment as directed by the Collocator.

18.3.10 Alarm Collection

The Collocator is responsible for the alarm monitoring of virtually collocated equipment and all expenses associated.

Since the maintenance of the Collocator’s equipment is at the direction and control of the Collocator, the Telephone Company will not be responsible for responding to alarms and will only conduct maintenance and repair activities at the direction of the Collocator.

18. Expanded Interconnection Service (Cont'd)

18.3 Virtual Collocation (Cont'd)

18.3.11 Termination of Virtual Collocation

Upon termination of the Virtual Collocation arrangement, the Collocator will work cooperatively with the Telephone Company to remove the Collocator's equipment and facilities from the Telephone Company property subject to the condition that the removal of such equipment can be accomplished without damaging or endangering other equipment located in the central office. The Telephone Company is not responsible for and will not guarantee the condition of such equipment. The Collocator is responsible for arranging for and paying for the removal of virtually collocated equipment including all costs associated with equipment removal, packing and shipping. Arrangements for and the removal of the Collocator virtually collocated equipment must be made within 30 business days after termination of the virtual collocation arrangement, unless a different time period is mutually agreed upon. The Telephone Company shall be responsible for exercising reasonable caution when removing virtually collocated equipment. The Telephone Company will only be responsible for damage done to such equipment caused by gross negligence on the part of the Telephone Company or its contractors during the removal process. However, Collocators will indemnify and hold the Telephone Company harmless for any damage done to virtually collocated equipment if the Telephone Company permits the Collocator to hire a the Telephone Company approved contractor to remove virtually collocated equipment. Any equipment not removed in this time frame may be removed by the Telephone Company and stored in a Telephone Company location, at the expense of the Collocator.

Upon termination of the Virtual Collocation, the Collocator must remove the fiber entrance cable used for the Virtual Collocation. If the entrance cable is not scheduled for removal within seven (7) days, the Telephone Company may arrange for the removal, and the Collocator will be responsible for any charges incurred to remove the cable. The Telephone Company and the Collocator will cooperatively manage the removal process. The Collocator is only responsible for physically removing entrance cables housed in conduits or inner-ducts and will only be required to do so when the Telephone Company instructs the Collocator that such removal can be accomplished without damaging or endangering other cables contained in a common duct or other equipment residing in the central office.

18. Expanded Interconnection Service (Cont'd)

18.3 Virtual Collocation (Cont'd)

18.3.12 Revisions

All revisions to an initial request for a virtual collocation arrangement submitted by the Collocator must be in writing via a new application form.

There are two types of revisions, major and minor. A major revision includes:

- adding telecommunications equipment that requires additional electrical power,
- accelerating the project schedule, or
- adding additional Collocator bays or equipment that impact the existing/proposed floor-space area provided to the Collocator in their quote package.

If a revision is major, a new interval for the virtual collocation arrangement will be established which shall not exceed two months. Additional application fees shall apply if the revision is major.

A minor revision includes:

- adding bays of equipment that do not significantly impact the existing/proposed electrical systems,
- adding light fixtures and outlets which do not exceed the capacity of the existing/proposed electrical system, or
- adjustments to the heat release projection which do not cause a change in the existing/proposed mechanical system.

Minor revisions will not require that a new interval be established. No additional application fees shall be applicable if the revision is minor.

18. Expanded Interconnection Service (Cont'd)

18.3 Virtual Collocation (Cont'd)

18.3.13 Application Interval for Virtual Collocation

The Telephone Company will provide virtual collocation arrangements in Central Offices on a “first come, first served” basis. To apply for a Dedicated Space in a particular central office, the Collocator will provide a completed virtual collocation application form found in the Interconnector’s Collocation Services Handbook, Appendix A for Virtual Collocation and will pay the associated initial application fee, project coordination fee, engineering design charge, and 50% of the nonrecurring charge. The Collocator may submit a security bond in lieu of check for the 50% of the nonrecurring charge. Upon receipt of the Collocator’s completed application and required payments as defined above, the Telephone Company will begin determining if space is available to fulfill the request. The Telephone Company will notify the Collocator as to whether its request for Dedicated Space has been granted or denied due to the lack of space within ten (10) days of receipt of the completed application.

In responding to an application request if space is available, the Telephone Company shall advise the Collocator that their request for nonrecurring and recurring tariff rates, and the provisioning interval.

Should multiple applications be submitted by a Collocator within a ten(10) day period, the following interval will apply:

Number of Applications By One Collocator	Response Interval
1 – 10	10 Days

Should the Collocator submit 11 or more applications within ten (10) days, the response interval will be increased by ten (10) days for every ten (10) additional applications or fraction thereof.

(This page filed under Transmittal No. 1)

18. Expanded Interconnection Service (Cont'd)

18.3 Virtual Collocation (Cont'd)

18.3.14 Provisioning Interval for Virtual Collocation (Cont'd)

Dedicated space for cageless virtual collocation is reserved upon notification to the Collocator that space is available.

Should the Collocator submit 11 or more applications within ten (10) calendar days, the provisioning interval will be increased by ten (10) calendar days for every 10 additional applications.

Where space suitable for central office equipment (Active Central Office Space) is available, the Telephone Company will deliver virtual collocation within 110 calendar days from the completion of the application process.

Any material revision to a completed application will be treated as a new application following revision guidelines set forth in Section 18.3.12 following.

18. Expanded Interconnection Service (Cont'd)

18.3 Virtual Collocation (Cont'd)

18.3.15 Rate Regulations

This section contains specific regulations governing the rates and charges that apply to Virtual Collocation for the purpose of interconnecting to the Telephone Company.

(A) Rate Elements for Central Offices

Consistent with provisions in Section 18.3.1, the following provides a list of the specific rate elements for virtual collocation for interconnection with the Telephone Company for the transmission and routing of telephone exchange service and exchange access, to be used in conjunction with virtual collocation in the Telephone Company Central Offices. Charges applicable to virtual collocation other than those listed below are also listed in Section 18 of the Access Service Tariff (Expanded Interconnection Service).

(1) Planning

(i) Application Fee

The application fee recovers the Telephone Company costs incurred to estimate the quotation of charges for the Collocator's request for a virtual collocation arrangement. The application fee also provides for the Telephone Company personnel to survey each requested location for availability of space for the placement of entrance cables as well as to determine floor space to physically place Collocator-designated equipment expressed as a non-recurring charge. The application fee is applied on an initial and subsequent basis. The initial charge will apply to the Collocator's request for a virtual collocation arrangement or the addition of cable. The subsequent charge will apply to any additional interconnection arrangements, as defined in Section 18.3.15(A)(7) connected to existing virtual collocated equipment. Charges for this sub-element are specified in Section 18.8.2(A)(1)(i).

18. Expanded Interconnection Service (Cont'd)

18.3 Virtual Collocation (Cont'd)

18.3.15 Rate Regulations (Cont'd)

(A) Rate Elements for Central Offices (Cont'd)

(1) Planning (Cont'd)

(ii) Project Management Fee

Upon acceptance of the Telephone Company estimate by the Collocator, this sub-element provides for project management costs incurred by the Telephone Company expressed as a nonrecurring charge. These include the Telephone Company engineering which are the detail engineering changes for the Telephone Company engineers to prepare the Central Office for Virtual Collocation. The subsequent charge will apply to any additional interconnection arrangements, as defined in Sections 18.3.15(A)(7) connected to existing virtual collocated equipment. Charges for this sub-element are specified in 18.8.2(A)(1)(ii).

18. Expanded Interconnection Service (Cont'd)

18.3 Virtual Collocation (Cont'd)

18.3.15 Rate Regulations (Cont'd)

(A) Rate Elements for Central Offices (Cont'd)

(2) Floor Space

This sub-element provides for the "occupancy" cost per bay framework associated with using the floor space in the Telephone Company central offices expressed as a monthly rate. Charges for this sub-element are specified in 18.8.2(A)(2). In those cases where an individual relay rack and its associated floor space are shared by the Telephone Company and the Collocators or among Collocators, the floor space and relay racks will be apportioned on a quarter rack basis.

(3) Relay Rack

This sub-element provides the "occupancy" cost per rack associated with using relay rack space in the Telephone Company's central offices expressed as a monthly rate. Charges for this sub-element are specified in Section 18.8.2(A)(3).

(4) Entrance Fiber

This rate element is described in Section 18.8.1(E). The rates and charges for this element are in Section 18.8.2.

18. Expanded Interconnection Service (Cont'd)

18.3 Virtual Collocation (Cont'd)

18.3.15 Rate Regulations (Cont'd)

(A) Rate Elements for Central Offices (Cont'd)

(5) Power Arrangement

This sub-element is the cable, cable rack and a standard relay rack mounted fuse panel including support and fabrication material necessary to support the virtually collocated equipment expressed as a monthly rate. The standard relay rack mounted fuse panel consists of a panel equivalent to a Telect model 009-0014-1001. This panel is configured at negative 48 volts, is dual feed rated at 50 AMPS per feed, and has 10 GMT fuses per load. If required, more than one power panel may be provisioned on a single relay rack. In the event that a Collocator requires a power arrangement that exceeds 50 AMPS from a single source, the Telephone Company will cooperatively work with the Collocator using comparable rate elements as the basis for such arrangements. Cable sizing is based on list 2 design loads. Charges for this sub-element are specified in Section 18.8.2(A)(5).

(6) Power Consumption

(i) D.C. Power Per AMP
The DC power charge consists of use of the DC power system, with AC input and AC backup for up to a 50 AMP (redundant) feeder power circuit expressed as a monthly rate. Charges for this sub-element are specified in Section 18.8.2(A)(6)(i).

(ii) D.C. Transmission Energy Charge
This sub-element provides for the monthly rate for AC Power Usage to provide redundant D.C. power to the virtually collocated equipment. Charges for this sub-element are specified in Section 18.8.2(A)(6)(ii).

(This page filed under Transmittal No. 1)

18. Expanded Interconnection Service (Cont'd)

18.3 Virtual Collocation (Cont'd)

18.3.15 Rate Regulations (Cont'd)

(A) Rate Elements for Central Offices (Cont'd)

(6) Power Consumption (Cont'd)

(iii) Ground Cable Arrangement
The Ground Cable Arrangement is the cabling arrangement designed to provide grounding for equipment expressed as a combination of a non-recurring charge and a monthly rate. Separate Ground Cable Arrangements are required for Integrated and Isolated Ground Planes. Charges for this sub-element are specified in Section 18.8.2(A)(6)(iii).

(7) Training

The Telephone Company is responsible for determining when training is necessary and how many of the Telephone Company employees require training to provide 24 hour a day, seven day a week coverage for the installation, maintenance and repair of Collocator's designated equipment not currently used in a wire center selected by the Collocator for virtual collocation. The Telephone Company will be limited to request training for four (4) Telephone Company personnel per location, unless a different number is mutually agreed upon by the Telephone Company and Collocator.

The Collocator may have the Telephone Company arrange for the required training of the Telephone Company personnel. The nonrecurring charges applicable for training are listed in Section 18.8.2 (Rates and Charges).

18. Expanded Interconnection Service (Cont'd)

18.3 Virtual Collocation (Cont'd)

18.3.15 Rate Regulations (Cont'd)

(A) Rate Elements for Central Offices (Cont'd)

(7) Training (Cont'd)

If the Collocator does not have the Telephone Company coordinate the required training, the Collocator may assume the responsibility for providing the training. It is then the responsibility of the Collocator to:

(i) arrange and pay to the supplier all costs for training sessions, including course material, and

(ii) arrange and pay to each individual supplier all costs associated with lodging and other than local transportation, such as airfare, required for the Telephone Company employee training.

The Telephone Company will work cooperatively with the Collocator to schedule the Telephone Company personnel training time required for the installation, maintenance and repair of the Collocator's designated equipment. The Collocator will be assessed two hours of the technician additional labor charge as specified in 18.8 (Rates and Charges) for the Telephone Company personnel time required to coordinate training activities with the Collocator. The Collocator will be responsible for reimbursement of applicable Telephone Company contractual compensation obligations for time spent as a result of the necessary training. All other charges, if applicable, specified in 18.8.2(A)(7) (Training) will be assessed to the Collocator.

18. Expanded Interconnection Service (Cont'd)

18.3 Virtual Collocation (Cont'd)

18.3.15 Rate Regulations (Cont'd)

(A) Rate Elements for Central Offices (Cont'd)

(8) Maintenance and Repair Labor Rates

(i) Maintenance of Equipment

This rate element is a labor rate charged by the Telephone Company to the Collocator for ongoing maintenance of the Collocator's equipment. Any maintenance requirements will be initiated by the Collocator. Labor rates are based upon a 1/2 hour basis and are dependent upon day of week and time of day. For purposes of this Tariff, normal week day is defined as 8:00 a.m. through 5:00 p.m., Monday through Friday, excluding holidays. Nonrecurring charges for this sub-element are specified in Section 18.8.2(A)(8).

(ii) Repair of Equipment

This rate element is a labor rate charged by the Telephone Company to the Collocator for repair of the Collocator's equipment. All repair will be at the direction of the Collocator.

Labor rates are based upon a charge for Local Operations Center (LOC) personnel to take the trouble report, create a trouble ticket, and dispatch a technician. Labor rates for actual repair of the trouble are based upon a 1/2 hour basis and are dependent upon day of week and time of day. For purposes of this Tariff, normal week day is defined as 8:00 a.m. through 5:00 p.m., Monday through Friday excluding holidays. Nonrecurring charges for this sub-element are specified in Section 18.8.2(A)(8).

18. Expanded Interconnection Service (Cont'd)

18.4 Microwave Expanded Interconnection Service

Microwave Expanded Interconnection Service provides a customer with space and associated requirements such as power and environmental conditioning within a Telephone Company Central Office to locate certain microwave facilities and equipment. Customer provided microwave service must be connected to Telephone Company provided interstate Special or Switched Access services.

Microwave rules, regulations and rates will be developed and filed upon bona fide requests from customers to provide Microwave Expanded Interconnection Service.

18. Expanded Interconnection Service (Cont'd)

18.5 Ordering

This section sets forth the regulations for ordering Expanded Interconnection Service.

An Expanded Interconnection Service (EIS) Application will be utilized to request the space and associated items required for EIS. Access Order or ASR will be utilized to provide the customer with the EIS Channel Termination.

(A) Application and Ordering Process

(1) To begin the interconnection ordering process, the customer must first contact the Telephone Company point of contact either by mail or phone to request an EIS Application.

(2) The Telephone Company will provide an EIS Application to the potential EIS customer. The EIS Application will require the customer to provide all engineering, floor space, environmental and other requirements necessary for the function of the service.

(3) The Telephone Company will require 50% of the nonrecurring charge for the Interconnection Chamber to be paid in advance to constitute a bona fide request.

(4) The order in which requests are processed will be dependent upon the date and time the Telephone Company receives the completed EIS Application and the prepayment, if required.

Nevada Bell’s filing of this tariff page does not constitute a waiver of the Company’s right to appeal any issue arising from the FCC’s Second Report and Order in CC Docket No. 93-162, FCC 97-208.

(This page filed under Transmittal No. 1)

18. Expanded Interconnection Service (Cont'd)

18.5 Ordering (Cont'd)

(A) Application and Ordering Process (Cont'd)

(5) Upon receipt of the prepayment and completed EIS Application, the Telephone Company will begin its assessment of feasibility and preparation of a customer specific quotation. The Telephone Company will notify the customer if their request can be met and provide a specific quotation and anticipated date for EIS service availability, in writing, within 30 days following receipt of a completed EIS Application and prepayment. The Telephone Company will prepare the Interconnection Chamber for occupancy within 180 days of the customer confirmation of the arrangements and rate quotation.

(6) If the customer withdraws his request or the Telephone Company is unable to meet his needs, the prepayment, less costs incurred by the Telephone Company, will be refunded.

(7) Customers initiating a request for EIS must have the capability of terminating their transmission facilities at the Telephone Company central office within a reasonable period of time, not to exceed 180 days from the date the request is initiated.

(8) The Telephone Company will make the necessary modifications to the central office to accommodate the customer's request. The Telephone Company will work cooperatively with the customer to ensure that service is installed in accordance with the service requested.

(9) The Telephone Company will advise the customer of any delay in completion of the preparation of the central office space and reschedule a new installation date for the earliest possible date.

(This page filed under Transmittal No. 1)

18. Expanded Interconnection Service (Cont'd)

18.5 Ordering (Cont'd)

(A) Application and Ordering Process (Cont'd)

(10) To begin the Service Order Process, the customer will initiate an Access Service Request (ASR) to schedule the EIS Channel Termination service installation. The time required to provision the EIS Channel Termination will be established in accordance with service date interval guidelines. Access Order modifications as delineated in Section 5.2.2 will apply. Cancellation charges as delineated in Section 5.2.3 will apply.

18. Expanded Interconnection Service (Cont'd)

18.5 Ordering (Cont'd)

(B) Insurance

Any and all insurance and/or bonds that may be required under the laws, ordinances, and regulations of any governmental authority is and shall be the sole responsibility of Interconnector.

(1) Without in any way limiting Interconnector's indemnification obligations hereunder, Interconnector shall maintain the following insurance on an occurrence form unless otherwise stated:

Commercial General Liability (bodily Injury and Property Damage) Insurance including the following supplementary coverages:

(a) Contractual liability to cover liability assumed under this tariff;

(b) Personal Injury Liability with the "employee" and "contractual" exclusions deleted;

(c) Product and Completed Operations Liability Insurance;

18. Expanded Interconnection Service (Cont'd)

18.5 Ordering (Cont'd)

(B) Insurance (Cont'd)

(d) Broad Form Property Damage Liability Insurance;

(e) Fire Legal Liability Insurance.

(f) Business Automobile Liability Insurance if any of Interconnector's or Interconnector's employees owned, leased, hired or borrowed automobiles are used on the Premises, including parking areas. Coverage shall be in force for all owned, non-owned and hired automobiles used by Interconnector.

(g) The limit of liability for the insurance required above shall not be less than five million dollars ($5,000,000) combined single limit per occurrence. Interconnector shall maintain a general aggregate of two-and-one-half times per occurrence limit applying.

(h) Employer's Liability Insurance with limits not less than $1,000,000.

(2) The insurance specified above shall:

(a) Name the Telephone Company, its directors and officers, affiliates and employees as additional insureds in matters covered by this tariff at Interconnector's sole expense;

(b) Provide that such insurance is primary coverage with respect to all insureds;

18. Expanded Interconnection Service (Cont'd)

18.5 Ordering (Cont'd)

(B) Insurance (Cont'd)

(c) Contain a Standard Cross Liability Endorsement which provides that the liability insurance applies separately to each insured and that the policies cover claims or suits by one insured against the other;

(d) Contain a mutual waiver of subrogation for property damage, and contain a waiver of workers' compensation subrogation claims against the Telephone Company.

(e) Include a requirement that the insurer provide the Telephone Company with thirty (30) days' written notice to the Telephone Company prior to the effective date of any cancellation or material change of the policy or policies of insurance;

18. Expanded Interconnection Service (Cont'd)

18.5 Ordering (Cont'd)

(B) Insurance (Cont'd)

(f) Be issued by insurance companies that hold a current rating of not less than "A", according to Best's Key Rating Guide; and

(g) Be issued by insurance companies that are either (a) admitted (licensed) to transact business in the State of Nevada or (b) non-admitted insurance companies. Such non-admitted companies shall be currently designated "no objection to use" by the Insurance Division, Nevada State Department of Commerce. Any contractor proposing to use a non-admitted insurance company shall, upon the Telephone Company's request, have its insurance broker agent furnish a statement confirming that they have made inquiry verifying that the company is currently not listed as objectionable to the regulatory authority having jurisdiction.

(h) If requested by the Telephone Company, Interconnector shall provide the Telephone Company with a Certificate of Insurance executed by a duly authorized representative of the insurer evidencing the coverages, limits, and provisions specified above.

Nevada Bell’s filing of this tariff page does not constitute a waiver of the Company’s right to appeal any issue arising from the FCC’s Second Report and Order in CC Docket No. 93-162, FCC 97-208.

(This page filed under Transmittal No. 1)

18. Expanded Interconnection Service (Cont'd)

18.5 Ordering (Cont'd)

(B) Insurance (Cont'd)

(i) At any time during the term of this Agreement, the Telephone Company may require Interconnector to obtain and maintain in force insurance with coverages or limits in addition to the foregoing with charges as mutually agreed.

18. Expanded Interconnection Service (Cont'd)

18.6 Obligations of the Telephone Company

The Telephone Company is solely responsible for determining whether physical interconnection is feasible in its central offices. The Telephone Company will designate floor space within each identified central office which will serve as the EIS customer's Interconnection Chamber. The interconnection space may be enclosed in a cage or room as warranted by the Telephone Company in order to comply with safety, building and/or security requirements.

The Telephone Company will be responsible for providing, installing, maintaining, and repairing the following:

- the connection cable and associated equipment which may be required between the Interconnection Chamber and the designated point(s) of termination

The Telephone Company will be responsible for installing, maintaining, and repairing the following:

- fiber optic cable(s) from entry point to Interconnection Chamber

The Telephone Company retains the right to maintain channel assignment control of the point(s) of termination.

The Telephone Company shall provide access to the Interconnection Chamber on an as-needed basis 24 hours a day, seven days a week.

The Telephone Company will provide at least two separate points of entry to the central office where there are two entry points for the Telephone Company cable facilities, with the exception of situations where one entry of a two entry office is filled to capacity.

ACCESS SERVICE

18. Expanded Interconnection Service (Cont'd)

18.6 Obligations of the Telephone Company (Cont'd)

The Telephone company is responsible for the overall integrity of its Central Offices. This requires conducting periodic central office inspections to check for compliance with fire and safety standards. Customers have a right to be present and will be notified of inspections to their physical collocation space in writing at least two weeks prior to non-emergency inspections. If an inspection is conducted by an outside agency (e.g., fire safety, insurance), the Company will notify the customer as soon as practicable. If notice in writing is not practicable, the Company will notify the customer with prompt non-written notice so that the interconnector may be present at the inspection. In the event that an emergency inspection is required, the Company will notify the interconnector as soon as practicable of the nature of the emergency, and of the inspection being done in response to the emergency.

Nevada Bell’s filing of this tariff page does not constitute a waiver of the Company’s right to appeal any issue arising from the FCC’s Second Report and Order in CC Docket No. 93-162, FCC 97-208.

(This page filed under Transmittal No. 1)

18. Expanded Interconnection Service (Cont'd)

18.7 Obligations of the Customer

The EIS customer is responsible for coordinating with the Telephone Company to ensure that services are installed in accordance with the service request.

The EIS customer will be responsible for providing, installing, maintaining, and repairing the following:

- transmission equipment located in the central office Interconnection Chamber

The EIS customer will be responsible for providing the following:

- fiber optic cable(s) (plus innerduct) from entry point to Interconnection Chamber

The EIS customer is responsible for providing a contact number that is readily accessible 24 hours a day, seven days a week.

The EIS customer will supply the Telephone Company with a list of its employees, contractors, and vendors who require access. The interconnector will notify the Telephone Company, within 24 hours of its determination, of any employees, contractors and vendors who no longer have a need for access to its location in any wire center.

The EIS customer will be responsible for notifying the Telephone Company of any significant outages within the customer's Interconnection Chamber which could impact or degrade the Telephone Company's switches and services, and provide estimated clearing time for restoral.

The EIS customer is responsible for testing, if necessary with the Telephone Company to identify and clear a trouble when the trouble has been sectionalized (isolated) to a EIS provided service.

The EIS customer is responsible for providing trouble report status when requested.

18. Expanded Interconnection Service (Cont'd)

18.7 Obligations of the Customer (Cont'd)

The EIS customer will be responsible for obtaining and maintaining appropriate insurance coverage, including fire, theft, and liability as set forth in 18.5(B)

The EIS customer will obtain and pay for all necessary licenses and permits required in connection with its use of the Interconnection Chamber (IC) and any improvements constructed thereon by the Interconnector. Any use of the Interconnection Chamber which requires the Interconnector to modify or upgrade its IC pursuant to fire codes or regulation, or the Americans with Disabilities Act shall be at the sole cost and expense of the EIS customer.

The EIS customer will provide access to its floor space at all times to allow the Telephone Company to react to emergencies, to maintain the building operating systems (when applicable), and to ensure compliance with OSHA, Telephone Company, and other rules, regulations, and standards related to fire, safety, health, and environmental safeguards.

Interconnector's personnel are required to exhibit distinct identification credentials to gain access to Interconnection Chamber or the Premises. Personnel without proper identification will be refused access.

18. Expanded Interconnection Service (Cont'd)

18.8 Rate Regulations

This Section contains the specific regulations governing the rates and charges that apply for Expanded Interconnection Service.

(A) General

An interconnecting customer who fails to pay any of the charges associated with EIS is subject to the provisions set forth in the written Agreement.

Credit Allowances for Service Interruptions will be those as set forth in Section 2.4.4 preceding.

(B) The following apply to the EIS Channel Termination:

The occupant of the Interconnection Chamber will be billed for the EIS Channel Termination.

Service rearrangements are changes to existing (installed) services which may be administrative only in nature or involve a physical change to the service as set forth in 7.2.2. preceding.

Changes to Pending Orders are covered in Section 5.2.2 preceding.

Changes in types of service will be treated as a discontinuance of the existing service and an installation of the new service.

(C) The following apply to the Interconnection Chamber:

Requests for relocation of the point of termination from one Interconnection Chamber to a different Interconnection Chamber will be handled on an individual case basis.

Requests for expansion of customer existing floor space within a specific office will be treated as a new application.

18. Expanded Interconnection Service (Cont'd)

18.8 Rate Regulations (Cont'd)

18.8.1 Description and Application of Rates and Charges

Expanded Interconnection Service customers will be subject to both nonrecurring and monthly recurring charges for the provision of service between the Telephone Company and the Interconnector. These rates and charges are set forth in 18.8.2 following.

The EIS customer must provide discontinuance notification of the EIS service, which would include the Interconnection Chamber, at least 60 days prior to the actual discontinuance. Monthly rates will apply for a period of 60 days from the date the Telephone Company receives discontinuance notification or until the requested discontinuance date, whichever period is longer.

If the interconnector vacates the collocation space in the Telephone Company's central office before the end of the useful life of the equipment, the Company will bill the interconnector a one time charge not to exceed the remaining undepreciated value of the collocation space and termination equipment. If, however, a second collocator subsequently occupies the vacated space, the Company will refund the initial customer a portion of the undepreciated investment.

The EIS Channel Termination will be subject to the rates and charges as set forth in 18.8.2 following. Installations, changes, rearrangements and discontinuance of only the EIS channel termination will be pursuant to regulations stated in Section 7.2.2.

Telephone Company services purchased by the EIS customer for interconnection with EIS service are subject to appropriate nonrecurring charges, monthly rates and other applicable rates and charges as set forth in Section 7., preceding.

Nevada Bell's filing of this tariff page does not constitute a waiver of the Company's right to appeal any issue arising from the FCC's Second Report and Order in CC Docket No. 93-162, FCC 97-208.

(This page filed under Transmittal No. 1)

18. Expanded Interconnection Service (Cont'd)

18.8 Rate Regulations (Cont'd)

18.8.1 Description and Application of Rates and Charges

(A) Prepayment Fee - Per Request, Per Wire Center

A specified nonrecurring amount, equal to 50% of the nonrecurring charge for the Interconnection Chamber, paid in advance of the initial preparation of a customer specific quote for an EIS service request. This fee, along with a completed EIS Application, will constitute a bona fide request.

(B) Interconnection Chamber - Wire Cage, Per 100 Square Feet

A minimum 100 square foot area enclosed by chain link fencing within a Telephone Company central office to be used for the sole purpose of containing an interconnector's equipment.

(C) Power

Electrical Outlets and required grounding bar furnished for each wire cage placed within a Telephone Company Central Office. Preferred AC, will be automatically included and Preferred DC will be optional based on the interconnector's request.

(D) Floor Space, Per 100 Square Feet

A minimum of 100 square foot area designated by the Telephone Company within a central office to be used for the sole purpose of installing, maintaining and operating the interconnector's equipment.

Nevada Bell's filing of this tariff page does not constitute a waiver of the Company's right to appeal any issue arising from the FCC's Second Report and Order in CC Docket No. 93-162, FCC 97-208.

(This page filed under Transmittal No. 1)

18. Expanded Interconnection Service (Cont'd)

18.8 Rate Regulations (Cont'd)

18.8.1 Description and Application of Rates and Charges (Cont'd)

(E) Cable & Innerduct Pull and Cable Splice, Per Hour

Each hour (or fraction thereof) spent by the Telephone Company personnel in pulling and/or splicing the interconnector's cable facilities into the central office and through the cable support structure.

(F) Conduit, Per Foot

Each foot of any reinforced passage or opening in, on under/over or through the ground between the feeder route conduit system and the cable vault location.

(G) EIS Channel Termination

The Expanded Interconnection Service Channel Termination connects the Interconnector's transmission equipment at the Point of Termination in the Interconnector's Customer Designated Premises (Interconnection Chamber) in the Telephone Company's Central Office with the Telephone Company's Switched Transport or Special Access High Capacity DS1 or DS3 service ordered by the Interconnector. EIS Channel Terminations for DS1 and DS3 connections will be electrical. The Interconnector may designate the channel facility assignments.

(H) Security Escort Service

In locations where card access is not available or in nonsecured areas, Telephone Company personnel may be required to accompany the Interconnector's personnel to the interconnector's' partitioned space or other nonsecured areas within a serving wire center.

Nevada Bell's filing of this tariff page does not constitute a waiver of the Company's right to appeal any issue arising from the FCC's Second Report and Order in CC Docket No. 93-162, FCC 97-208.

(This page filed under Transmittal No. 1)

18. Expanded Interconnection Service (Cont'd)

18.8 Rate Regulations (Cont'd)

18.8.2 Rates and Charges

The following rates and charges apply for Expanded Interconnection Service.

USOC	Monthly Rate	Nonrecurring Charge
Interconnection Chamber per 100 SQ FT.		
RENONV02	None	$ 9,714.47
RENONV13	None	4,857.23
RENONV14	None	16,290.50
CRCYNV01	None	4,857.23
SPRKNV11	None	14,032.32
Floor Space per 100 SQ FT.		
RENONV02	$ 693.64	None
RENONV13	791.90	None
RENONV14	527.33	None
CRCYNV01	674.53	None
SPRKNV11	363.13	None
Power		
preferred DC. Per 10 AMP -48 volt circuit	$200.91	0.00

Nevada Bell’s filing of this tariff page does not constitute a waiver of the Company’s right to appeal any issue arising from the FCC’s Second Report and Order in CC Docket No. 93-162, FCC 97-208.

(This page filed under Transmittal No. 1)

ACCESS SERVICE

18. Expanded Interconnection Service (Cont'd)

18.8 Rate Regulations (Cont'd)

18.8.2 Rates and Charges (Cont'd)

	USOC	Monthly Rate	Nonrecurring Charge	
Cable and Innerduct Pull & Cable Splice, per hour				
Engineer			$ 80.00	
Technician			80.00	
Conduit				
per Foot		$1.11	0.00	
EIS Channel Termination (EISCT) Special Access				
DS1	CCDS1	9.06	231.46	
DS3	CCDS3	35.62	202.36	
OC3/3c	CCCJX	470.00	400.00	
OC12/12c	CCCKX	940.00	400.00	
OC48/OC48c	CXCZX	1,880.00	400.00	
OC-192	C2CAX	3,760.00	400.00	
1 Gigabit Ethernet	OCLGX	1,500.00	400.00	(N)
EIS Channel Termination (EISCT) Switched Transport				
DS1	XCSW1	9.06	231.46	
DS3	XCSW3	35.62	202.36	
Security Escort Service, per hour				
Engineer			$ 80.00	
Technician			80.00	

(This page filed under Transmittal No. 56)

18. Expanded Interconnection Service (Cont'd)

18.8 Rate Regulations (Cont'd)

18.8.2 Rates and Charges (Cont'd)

Virtual Collocation

(A) Central Offices

	USOC	Monthly Rate	Nonrecurring Charge
(1) Planning			
(i) Application Fee			
- Initial		$00.00	$463.44
- Subsequent		$00.00	$346.33
(ii) Project Management Fee			
- Initial		$00.00	$3,523.84
- Subsequent		$00.00	$1,502.71
(2) Floor Space (Per Bay Framework)		$33.71	$00.00
(3) Relay Rack (Per Rack)		$32.06	$00.00
(4) Entrance Fiber		(See Page 18-53 in Section 18.8.2)	

(This page filed under Transmittal No. 1)

18. Expanded Interconnection Service (Cont'd)

18.8 Rate Regulations (Cont'd)

18.8.2 Rates and Charges (Cont'd)

Virtual Collocation (Cont'd)

(A) Central Offices (Cont'd)

	Monthly Rates	Nonrecurring Charges
(5) Power Arrangement	$90.49	$3,357.46
(6) Power Consumption		
(i) DC Power Per AMP	$14.69	$0.00
(ii) DC Transmission Energy Charge (Per AMP)	$2.69	$0.00
(iii) Ground Cable Arrangement (Per Foot)	$0.0068	$0.00

(This page filed under Transmittal No. 1)

18. Expanded Interconnection Service (Cont'd)

18.8 Rate Regulations (Cont'd)

18.8.2 Rates and Charges (Cont'd)

Virtual Collocation (Cont'd)

(A) Central Offices (Cont'd)

	Monthly Rates	Nonrecurring Charges
(7) Training		
(i) Training Course and Materials (Per Day Per Employee)	$ 0.00	$440.00
(ii) Lodging (Per Day Per Employee)	$ 0.00	117.80
(iii) Intercity Transportation (Per Employee)	$ 0.00	$679.35
(iv) Local Transportation (Per Odometer Mile Per Employee)	$ 0.00	$.50
(v) Per Diem (Per Employee)	$ 0.00	$44.00
(vi) Airport Parking (Per Day, Per Employee)	$ 0.00	$7.00
(8) Maintenance and Repair Rates		
(i) LOC Trouble Ticket, Each 1/4 hour	$ 0.00	$22.71
(ii) Regular Hours-Manned Office		
- Each 1/2 hour	$ 0.00	$45.42
- Each Additional 1/2 hour	$ 0.00	$45.42
(iii) After Hours Callout		
- 4 Hour Minimum	$ 0.00	$363.36
- Each Additional 1/2 hour	$ 0.00	$45.42
(iv) Non-Staffed Office Any Time		
- 4 Hour Minimum	$ 0.00	$363.36
- Each Additional 1/2 hour	$ 0.00	$45.42

(This page filed under Transmittal No. 1)

ACCESS SERVICE

		Page No.	
19.	Service Provider Number Portability (SPNP) Service	19-2	(N)
19.1	SPNP General Description	19-2	
19.2	SPNP Service Applications	19-3	
19.3	Service Provisioning	19-7	
19.3.1	Manner of Provisioning	19-7	
19.3.2	Limitations	19-8	
19.3.3	Network Management	19-10	
19.4	Rate Regulations	19-11	
19.4.1	Rate Elements	19-11	
19.5	Rates and Charges	19-13	(N)

(This page filed under Transmittal No. 1)

19. Service Provider Number Portability (SPNP) Service

19.1 SPNP General Description

Service Provider Number Portability (SPNP) Service provides, where facilities permit, the ability: (1) of a local exchange telephone service customer to maintain the same Directory Number (DN) when changing from one telecommunications service provider to another while remaining at the same location; and (2) of all telephone company customers (end users, line side access and resale customers) to complete local calls to numbers that have been ported.

SPNP Service is an Advanced Intelligent Network (AIN) capability which utilizes the common channel signaling network to query a database to secure network routing instructions before completion of a call. For NXXs that have been designated as number portable, the database contains information about end user's choice of Local Service Provider(LSP) along with the appropriate Location Routing Number (LRN) for that LSP's service switch that will be used to direct calls to the correct network switching facility for completion to end user customers that have ported their number. Where more than one network is involved in completing the call, the network just before the terminating network (i.e., the N-1 Network) is responsible for querying a Service Provider Number Portability (SPNP) database to secure the routing information is used in routing the call. Where the carrier of the N-1 network fails to query on SPNP database, and forwards a call to a switch in the Telephone Company's network to a NXX designated as a number portable code in the Local Exchange Routing Guide and/or the NECA Tariff F.C.C. No. 4 and the NXX has at least one number ported, the Telephone Company will bill that N-1 carrier a SPNP Query – Default Charge as specified in 19.4(B).

19. Service Provider Number Portability (SPNP) Service (Cont'd)

19.2 SPNP Service Application

There are three distinct applications of the SPNP network capability available through the Telephone Company's network:

(A) SPNP Query Service

(1) Prearranged
(2) Default

(B) SPNP Query Service - Database

(C) Basic SPNP Service

Following are detailed descriptions of each of the available service applications.

19. Service Provider Number Portability (SPNP) Service (Cont'd)

19.2 SPNP Service Application (Cont'd)

(A) SPNP Query Service

(1) Prearranged

Customers terminating calls from the N-1 Network to numbers in the Telephone Company's network with NXX codes that have been designated as number portable and the NXX has at least one number ported are responsible for making a query to a database containing information necessary to route calls to number portable NXX codes. This capability is provided under this tariff as an optional access service.

Customers responsible for making the database query may arrange in advance to have the Telephone Company's end office or access tandem switch suspend call processing, formulate and launch a query via the common channel signaling network to a database containing information necessary to route calls to number portable NXX codes. When the necessary routing information has been returned from the SPNP database to the switch originating the query, call processing is resumed and the call is routed to the correct network switching element for completion to the called party.

19. Service Provider Number Portability (SPNP) Service (Cont'd)

19.2 SPNP Service Application (Cont'd)

(A) SPNP Query Service (Cont'd)

(2) Default

Customers that have not prearranged with the Telephone Company to query a database containing information necessary to route calls to number portable NXX codes, may terminate such traffic to the Telephone Company's network non-queried. When this occurs, the Telephone Company's network must query its SPNP database to obtain information necessary to complete such calls. A SPNP Query-Default rate will apply.

Such non-queried traffic may be routed to the Telephone Company's end office or access tandem switch. This will force the Telephone Company's end office or access tandem switch to suspend call processing, formulate and launch a query via the common channel signaling network to a database to obtain information necessary to route calls to number portable NXX codes. When the necessary routing information has been returned from the SPNP database to the switch originating the query, call processing is resumed and the call is routed to the correct network switching element for completion to the called party.

N-1 Carriers who terminate traffic into the Telephone Company's network and have not prearranged with the Telephone Company to perform SPNP queries will also be assessed the Billing Charge, as set forth in 19.4(B).

19. Service Provider Number Portability (SPNP) Service (Cont'd)

19.2 SPNP Service Application (Cont'd)

(B) SPNP Query Service - Database

Customers terminating calls from the N-1 Network to numbers in the Telephone Company's network with NXX codes that have been designated as number portable and the NXX has at least one number ported may be responsible for making a query to a database containing information necessary to route calls to number portable NXX codes. Customers may query the Telephone Company's SPNP database by interconnecting with the Telephone Company's common channel signaling network as provided in Section 6.1.2(A)(5)(d), Common Channel Signaling Access Capability (CCSAC). This is an optional access service.

Customers responsible for making the database query may arrange in advance to query, via the common channel signaling network, the Telephone Company's SPNP database which contains information necessary to route calls to number portable NXX codes. When the necessary routing information has been returned from the SPNP database to the switch originating the query, call processing is resumed by the originating carrier, local service provider, etc., and the call is routed to the correct network switching element for completion to the called party.

(C) Basic SPNP Service

The Telephone Company queries the database, as required, on behalf of its local exchange, line side access service customers, and resale customers to enable completion of calls to numbers with NXX codes that have been designated as number portable. This service is "automatically" provided as part of the dialing process employed in the Telephone Company's local exchange and access network.

On calls placed to numbers with NXX codes that have been designated as number portable, an originating LRN capable switch, using advance intelligent network capabilities will suspend call processing and formulate and launch a query via the common channel signaling network to a database containing information necessary to route calls to number portable NXX codes. When the necessary routing information has been returned from the database to the switch originating the query, call processing is resumed and the call is routed to the correct network switching element for completion to the called party.

19. Service Provider Number Portability (SPNP) Service (Cont'd)

19.3 Service Provisioning

SPNP Service is initially being deployed in the Reno, NV Rate Center and will be deployed in all Telephone Company switches by December 31, 1999.

SPNP Service procedures will be applied uniformly to all users of the Telephone Company's SPNP Service. The Telephone Company's SPNP database will receive and respond to all queries, including the Telephone Company's queries, as defined in the following Technical Reference Publication, listed in Reference to other Publications with addresses:

(A) Bellcore GR-2936, Local Number Portability Capability Specification

19.3.1 Manner of Provisioning

SPNP Service will be provisioned using the LRN solution. LRN associates an NPA-NXX number with each central office switch that serves ported lines. This number will be known as the LRN for that switch. The LRN will be used as a network routing number for calls to ported numbers served by that switch. The LRN will share an existing NPA-NXX assigned to the specific office it represents. All switching equipment types used by the Telephone Company for SPNP Service will utilize LRN functionality using Advanced Intelligent Network capability (AIN).

With SPNP Service, a subscriber served by one switch (the "donor" switch) may move service to a different switch (the "recipient" switch) while retaining the same DN. The LSP of the recipient switch will send information to the Regional Service Management System/Number Portability Administration Center (RSMS/NPAC), the third-party administrator/database, for the porting subscriber. This information will include the porting DN, the LRN of the recipient switch, the Destination Point Codes for CLASS and LIDB Transaction Capability Application Part (TCAP) messages. This information is downloaded to all SPNP databases based on contracts between the third-party administration and the SPNP Service Providers.

19. Service Provider Number Portability (SPNP) Service (Cont'd)

19.3 Service Provisioning (Cont'd)

19.3.2 Limitations

SPNP Service is to be used only on a call-by-call basis for routing calls to number portable NXX codes and cannot be used for purposes other than those functions described in Section 19.2 SPNP Service Applications unless expressly authorized in writing by the customer and the Telephone Company.

Information residing in the Telephone Company's SPNP database is protected from unauthorized access and may not be stored in a customer's database or elsewhere for any reason.

The LRN method of number portability is limited to circuit switched calls and excludes High Volume Call-in network NXXs until industry standards are defined.

Customers with directory numbers that are used for both circuit switched (e.g., voice and/or data) and packet data can port their directory numbers, however, they must disconnect the packet service and reconnect with their new service provider. SPNP Service does not apply to Service Codes (e.g., 411) or Service Access Codes (e.g., 500, 700, 800, and 900).

Groups of lines (e.g., multi-line hunt groups, centrexy groups) cannot port separately. If only one directory number in the group ports, it will be removed from the group. However, the entire group of directory numbers may port. The functionality associated with the ported number is determined by the new service provider.

When access traffic is directly routed to an end office, only those numbers in valid NXX codes served by that office, including numbers ported into that office, may be accessed. When routed through an access tandem, only those numbers in valid NXX codes served by end offices subtending the access tandem, including numbers ported into those offices, may be accessed. However, when a call has been routed to an access tandem to a number in a valid NXX code served by an end office subtending the access tandem but the NXX code is shown in the LERG as number portable where the N-1 network has not performed a SPNP query, one of the following may occur:

19. Service Provider Number Portability (SPNP) Service (Cont'd)

19.3 Service Provisioning (Cont'd)

19.3.2 Limitations (Cont'd)

- the call will be routed to the appropriate end office for completion when the call is to a number in a valid NXX code served by an end office subtending the access tandem and a query of the SPNP database indicates the number has not been ported;

- the call will be routed to the appropriate end office based on the LRN for completion when the call is to a number in a valid NXX code served by an end office subtending the access tandem and a query of the SPNP database indicates the number has been ported and the LRN returned by the database is in a valid NXX code served by an end office subtending the access tandem; or

- the call will be routed to the other access tandem and then to the appropriate end office based on the LRN for completion when the call is to a number in a valid NXX code served by an end office subtending the access tandem and a query of the SPNP database indicates that the number has been ported and the LRN returned by the database is in a valid NXX code that is served by an end office subtending another access tandem.

When a call is to a number in a valid NXX code shown in the LERG as number portable and the N-1 network performs the SPNP query, the N-1 network is responsible for routing the call to the correct access tandem based on the LRN returned by the SPNP database.

19. Service Provider Number Portability (SPNP) Service (Cont'd)

19.3 Service Provisioning (Cont'd)

19.3.3 Network Management

The Telephone Company will administer its network to ensure the provision of acceptable service levels to all telecommunications users of the Telephone Company's network services.

The Telephone Company maintains the right to apply automated or manual protective controls which would generally be applied as a result of occurrences such as failure or overload of Telephone Company facilities, customer facilities, or other networks, natural disasters, mass calling or national security demands.

Choke Networks, also known as High Volume Call-In (HVCI) Networks are also utilized by the Telephone Company to ensure its networks reliability. HVCI service is represented by a unique NXX, not assigned to a specific switch in the Local Exchange Routing Guide, that has a presence in several switches within the designated local calling area for which terminating calls are routed over dedicated trunk groups to a single tandem switch. This is done for the purpose of controlling the impact on the local network from potentially high volumes of terminating calls that might be directed to DNs within such NXXs at a customer's request.

Using the Telephone Company's target architecture, the final completion group to a customer subscribing to a choke network service is associated with a Pseudo number to prevent any calling party from circumventing the function of the choke network. Choke network customers may designate any local network provider to provide the final completion group without changing the DN associated with their choke network service. However, numbers within special NXXs designated for this purpose are not number portable and are not included in the SPNP database.

19. Service Provider Number Portability (SPNP) Service (Cont'd)

19.4 Rate Regulations

The rates and charges associated with SPNP Services, which are "query" based, will be billed on a monthly basis, based on recorded usage. Query charges will be applied by the Telephone Company based upon the recordings of customer queries to the database. If such recordings are not available, the Telephone Company will develop monthly charges based on an average number of queries per month.

Specific rates and charges are set forth in 19.5, Rates and Charges.

19.4.1 Rate Elements

The following provides a list of the various SPNP Service rate elements and how the rate elements are defined. The query rate element applies for each query received at the Telephone Company's database regardless of whether the DN is actually ported.

(A) SPNP Query - Prearranged

The SPNP Query - Prearranged Charge rate element provides for the routing information necessary to complete calls to directory numbers within NXX Code designated as number portable including transport of the query to and from the database. These queries apply to Service Providers with arrangements made in advance with the Telephone Company.

(1) A recurring usage query rate will be applied on a per unit basis, i.e., per query. Usage charges are accumulated over a monthly period.

(2) A nonrecurring rate will apply on a per order basis.

(B) SPNP Query – Default

The SPNP Query - Default Charge rate element provides for the identification of routing information necessary to complete calls to directory numbers within NXX Code designated as number portable including transport of the query to and from the database. These queries will apply to all Service Providers with no established arrangements made in advance with the Telephone Company. In addition, a billing charge will apply as specified in 19.5(G) (Rates and Charges).

(1) recurring usage rate will be applied on a per unit basis, i.e., per query. Usage charges will be accumulated over a monthly period.

(2) A nonrecurring rate will apply per account the first time an N-1 Carrier terminates into the Telephone Company's network for delivery to a number in an NXX designated in the LERG as number portable and at least one number in the NXX has ported and the N-1 Carrier has not prearranged with the Telephone Company to perform SPNP queries.

(This page filed under Transmittal No. 1)

19. Service Provider Number Portability (SPNP) Service (Cont'd)

19.4 Rate Regulations (Cont'd)

19.4.1 Rate Elements (Cont'd)

(C) SPNP Query - Database

The SPNP Query - Database rate element provides for the identification of the routing information associated with the directory number being queried including transport from the STP to the SPNP data base.

(1) A recurring usage rate will be applied on a per unit basis, i.e., per query. When the actual number of database queries cannot be determined, the Telephone Company will bill a monthly recurring charge.
(2) A nonrecurring rate will apply on a first and additional basis based on the number of STP mated pairs requested.

(D) Basic SPNP Service

The Basic SPNP Service is billed on a monthly basis to the Telephone Company's local customers, lineside access customers, and customers of a local service provider that resells services of the Telephone Company for the associated local or lineside access services (resale customers). This charge applies to all existing customers beginning April 1, 2000, as defined below and will apply to any potential customer when the customer obtains service.

The Basic SPNP Service rate element applies to and provides the capability necessary for the Telephone Company's local and general exchange and lineside access services (e.g., FGA) customers to: (1) maintain the same DN when changing from one Telecommunications Service Provider to another while remaining at the same location, and (2) to complete calls to any DN that has been ported.

This capability is automatically provided as part of the local dialing process employed in the Telephone Company's exchange network.

This charge applies per line capable of originating local exchange calls with the following exceptions:

- PBX trunks will be assessed the equivalent of 9 monthly rates; and
- ISDN PRI will be assessed the equivalent of 5 monthly rates.

19. Service Provider Number Portability (SPNP) Service (Cont'd)

19.5 Rates and Charges

		Monthly Recurring Charge	Monthly Rate Per Query
(A)	SPNP Query - Prearranged		
	- END OFFICE		$ 0.001075(I)
	- Tandem		0.001075(I)
(B)	SPNP Query - Default		
	- End Office		$ 0.001075(I)
	- Tandem		0.001075(I)
(C)	SPNP Query - Database	$1280.00(I)	$ 0.00034

		Monthly Rate Per Line
(D)	Basic SPNP Service*	$ 0.41

		Nonrecurring
(E)	SPNP Query – Prearranged, per order	$ 48.40
(F)	SPNP Query - Database, per STP Mated Pairs	
	- First	$ 501.16
	- Additional	$ 230.94
(G)	Billing Charge, per customer account	$ 225.85

* Billed over a 60 month period beginning April 1, 2000.

Rates contained in this transmittal are subject to subsequent adjustment, effective retrospectively, in the event the Commission or a court subsequently authorizes Nevada to correct its rates pursuant to pending motions, or petitions for reconsideration or waiver, or in the event of any other adjustment to an order of the Commission or a court.

(This page filed under Transmittal No. 3)

		Page No.	
20.	Broadband Circuit Service*	20-2	(C)
20.1	General Description	20-2	
20.2	Rate Regulations	20-5	
20.3	Rates and Charges	20-34	
20.3.1	OC-3	20-34	
20.3.2	OC-12	20-41	

* Effective, January 11, 2002, BCS will no longer be available to customers. Grandfathered BCS Customers will maintain their existing service arrangement until their contract expires unless they choose to convert to another service. No changes to existing BCS service arrangements will be permitted, nor will any renewals be allowed. (N) (N)

(This page filed under Transmittal No. 7)

ACCESS SERVICE

20. Broadband Circuit Service* (C)

20.1 General Description

Broadband Circuit Service (BCS) is a special access service which transports SONET optical rate capacities between two end points. BCS can be provided between two customer designated premises when provisioned for OC-3 (155.520 Mbps), OC-3c (155.520 Mbps concatenated), OC-12 (622.080 Mbps), and OC-12c (622.080 Mbps concatenated). BCS is only available where facilities and equipment exist.

When provisioned for non-concatenated OC-3 (155.520 Mbps) and OC-12 (622.080 Mbps), BCS is provided under three topologies. These include: A) between two customer designated premises; B) between a customer designated premises and a Telephone Company Hub Central Office; and C) a Service-to-Service Through Connect Arrangement between a Telephone Company Hub Central Office and another compatible Telephone Company provided special access service, such as another BCS circuit with the same speed and interface type. These deployment scenarios are shown below.

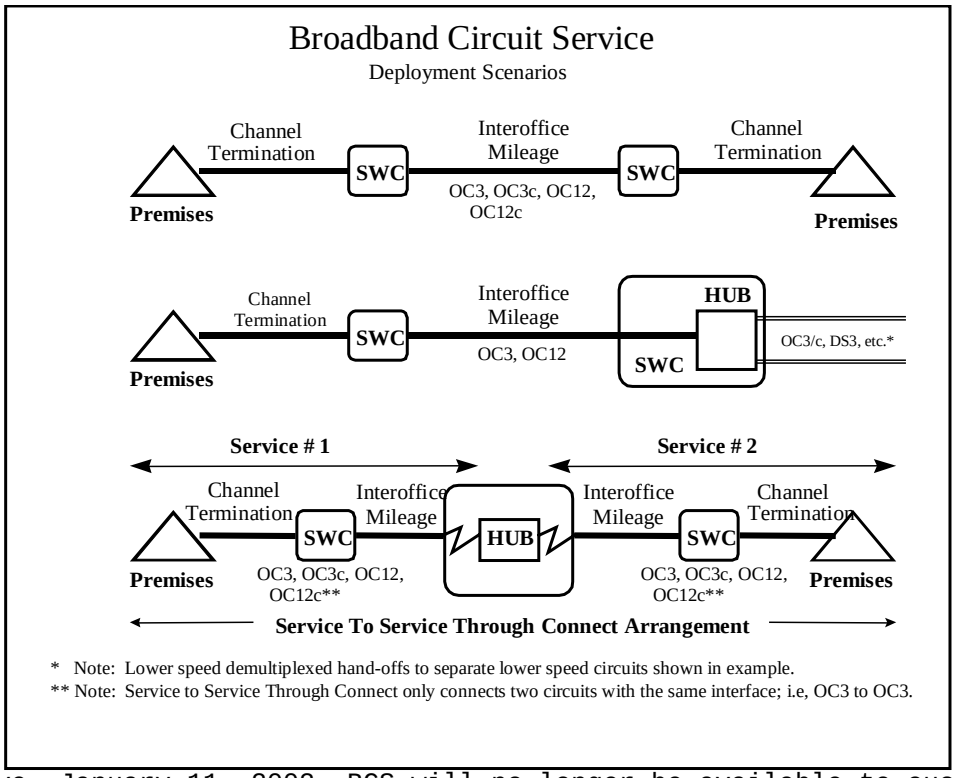

* Effective, January 11, 2002, BCS will no longer be available to customers. Grandfathered BCS Customers will maintain their existing service arrangement until their contract expires unless they choose to convert to another service. No changes to existing BCS service arrangements will be permitted, nor will any renewals be allowed. (N)

(This page filed under Transmittal No. 7)

20. Broadband Circuit Service* (Cont'd) (C)

20.1 General Description (Cont'd)

BCS circuits are configured based on customer requirements provided to the Telephone Company at the time of ordering. BCS does not extend the SONET Data Communications Channel overhead across the Network Interface to the customer's equipment. BCS may be configured in the following ways:

A. OC-3:

1. Three STS-1 (Synchronous Transport Signal) channels which each contain:

- One asynchronous DS3 that is STS-1 Mapped (BCS Default Configuration);
- Up to 28 asynchronous DS1s that are VT-Mapped; or
- An STS-1 channel without constraint to payload mapping when the STS-1 channel does not terminate via the Central Office Multiplexing optional feature to DS1 or DS3 services within the Telephone Company's network as in Section 20.2(D)(3) following.

2. A single concatenated STS-3c channel.

B. OC-12:

1. Twelve STS-1 channels which each contain:

- One asynchronous DS3 that is STS-1 Mapped (BCS Default Configuration);
- Up to 28 asynchronous DS1s that are VT-Mapped; or
- An STS-1 channel without constraint to payload mapping when the STS-1 channel does not terminate via the Central Office Multiplexing optional feature to DS1 or DS3 services within the Telephone Company's network as in Section 20.2(D)(3) following.

2. Four concatenated STS-3c channels;

3. From one to three STS-3c channels mixed with from three to nine STS-1 channels subject to the utilization of the total OC-12 capacity;

4. A single concatenated STS-12c channel.

* Effective, January 11, 2002, BCS will no longer be available to customers. Grandfathered BCS Customers will maintain their existing service arrangement until their contract expires unless they choose to convert to another service. No changes to existing BCS service arrangements will be permitted, nor will any renewals be allowed. (N) (N)

(This page filed under Transmittal No. 7)

20. Broadband Circuit Service* (Cont'd) (C)

20.1 General Description (Cont'd)

The customer is responsible for providing, at the time of ordering, the required STS signal configuration to be contained in each OC-3 and OC-12 BCS circuit. This information is required for routing and connection purposes in the network. (Note: BCS will be configured for asynchronous DS3 that is STS-1 Mapped if the customer does not provide the STS signal configuration at the time the service is ordered.)

If the customer elects to modify the STS-1 configuration of an existing premises-to-premises, non-concatenated OC-12 BCS that involves lower speed concatenated signals (i.e., STS-3c), an OC-12 STS-1 Channel Reconfiguration Charge will apply per customer initiated change as set forth in Section 20.2(L)(3) and 20.3.2(F) following.

* Effective, January 11, 2002, BCS will no longer be available to customers. Grandfathered BCS Customers will maintain their existing service arrangement until their contract expires unless they choose to convert to another service. No changes to existing BCS service arrangements will be permitted, nor will any renewals be allowed. (N) (N)

20. Broadband Circuit Service* (Cont'd) (C)

20.2 Rate Regulations

This section contains the specific regulations governing the rates and charges which may apply to BCS. The rates and charges in effect at the time the BCS is installed and accepted by the customer are the rates and charges which will be billed to the customer requesting the service. The rates and charges in effect at the time may not be the same as those rates and charges in effect at the time the customer requests the service.

If the Telephone Company initiates rate changes resulting in a decrease of rates for an existing service with a 3 or 5 year billing period, those rate changes will be passed along to the customer. Rate changes resulting in an increase of rates for an existing service with a 3 or 5 year billing period will not exceed the original rate for that selected billing period. Rate changes may occur as a result of F.C.C. action.

The four basic rate categories for BCS are Channel Termination, Interoffice Mileage, Service-to-Service Through Connect Arrangement, and Optional Features.

A. Channel Termination (CT)

The CT provides for the communications path between a customer designated premises and the serving wire center. CTs are only offered without terminal equipment at the customer's designated premises.

Without terminal equipment is defined as a CT without the Telephone Company's Add-Drop Multiplexer (ADM) located on the customer's premises. A BCS CT is terminated at a demarc that hands-off either two or four fiber optic strands to the customer depending on the optional features ordered. The customer is required to provide an ADM that is compatible with the Telephone Company's ADM in the serving wire center as is described in Technical Publication GR-253-CORE. BCS does not extend the SONET Data Communications Channel overhead across the Network Interface to the customer's equipment. The figure following illustrates a deployment scenario where customers might order a basic CT without Equipment Protection (EP) or Loop Redundancy (LR) optional features.

* Effective, January 11, 2002, BCS will no longer be available to customers. Grandfathered BCS Customers will maintain their existing service arrangement until their contract expires unless they choose to convert to another service. No changes to existing BCS service arrangements will be permitted, nor will any renewals be allowed. (N) (N)

20. Broadband Circuit Service* (Cont'd) (C)

20.2 Rate Regulations (Cont'd)

A. Channel Termination (CT) (Cont'd)

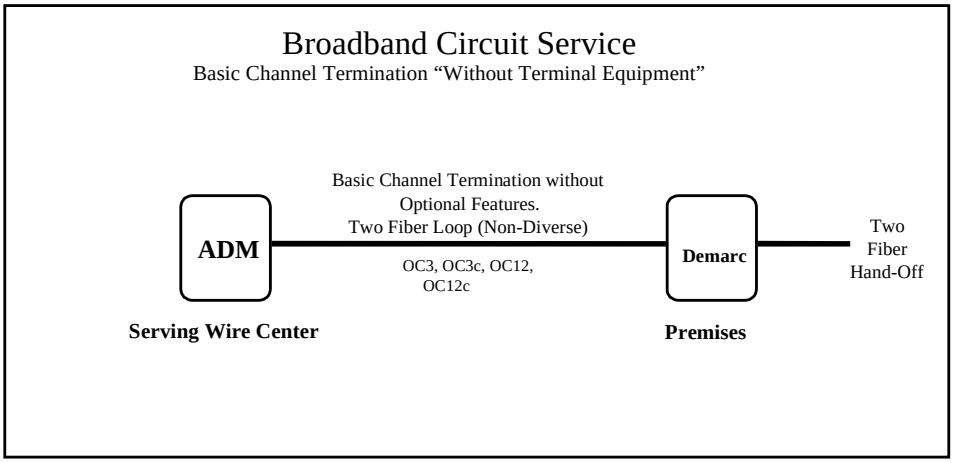

B. Interoffice Mileage (IM)

IM provides for the transmission facilities between the serving wire centers associated with two customer designated premises, between a serving wire center and a Telephone Company Hub Central Office, or between two Telephone Company Hub Central Offices. The figure below illustrates two deployment scenarios that involve IM.

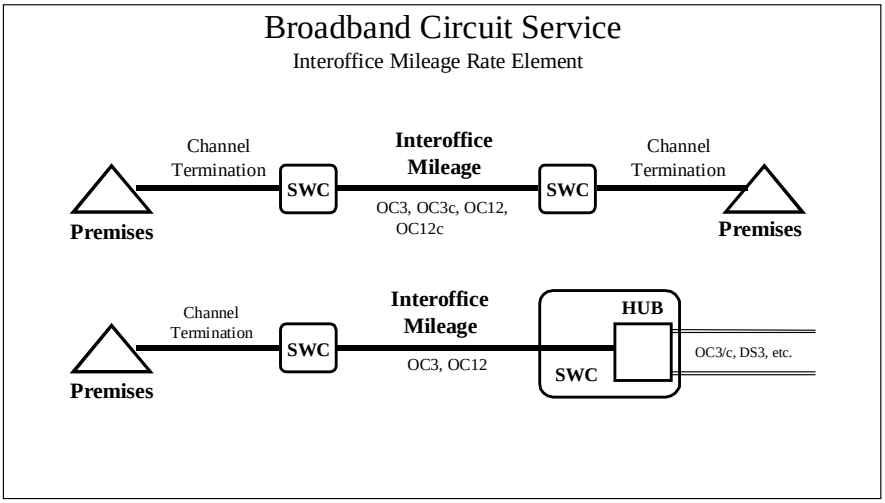

* Effective, January 11, 2002, BCS will no longer be available to customers. Grandfathered BCS Customers will maintain their existing service arrangement until their contract expires unless they choose to convert to another service. No changes to existing BCS service arrangements will be permitted, nor will any renewals be allowed. (N) (N)

(This page filed under Transmittal No. 7)

20. Broadband Circuit Service (BCS)* (Cont'd) (C)

20.2 Rate Regulations (Cont'd)

C. Service-to-Service Through Connect Arrangement

A Service-to-Service Through Connect Arrangement provides for an interconnection of two BCS circuits with the same speed and interface, or a like-speed and interface BCS circuit associated with another compatible Telephone Company provided special access service as provided by the tariff. The figure below illustrates the Service-to-Service Through Connect Arrangement.

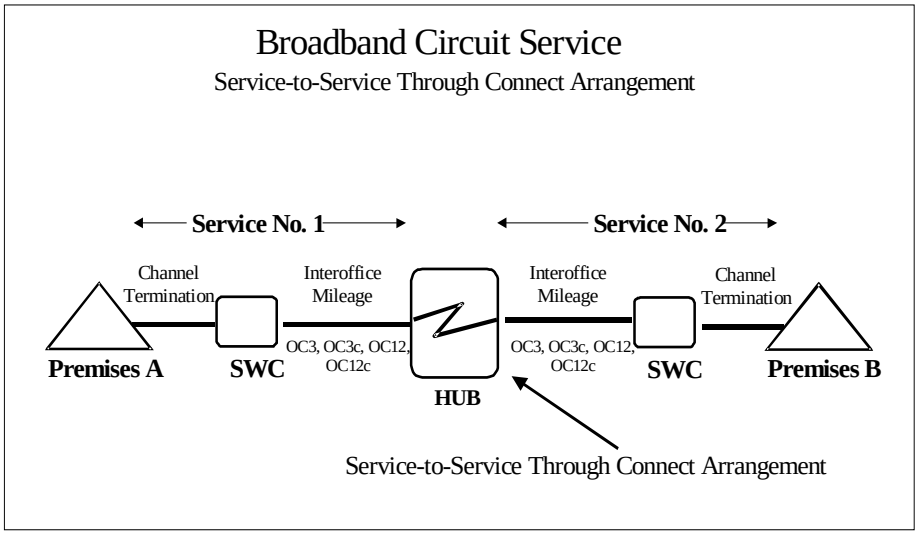

* Effective, January 11, 2002, BCS will no longer be available to customers. Grandfathered BCS Customers will maintain their existing service arrangement until their contract expires unless they choose to convert to another service. No changes to existing BCS service arrangements will be permitted, nor will any renewals be allowed. (N) (N)

20. Broadband Circuit Service (BCS)* (Cont'd) (C)

20.2 Rate Regulations (Cont'd)

D. Optional Features

1. Equipment Protection

Equipment Protection (EP) is a CT optional feature that provides for automatic restoration of BCS in the event of an equipment card failure within the Telephone Company's ADM located in the serving wire center. EP is provided via four fibers (working and protect side) in conjunction with the CT. EP does not provide for automatic loop redundancy nor any protection within the customer's ADM on their premises. EP relies upon a customer provided ADM for protection switching functions that are compatible with the Telephone Company's ADM in the serving wire center. EP is not available as a stand-alone feature with Loop Redundancy, since EP is inherent to that feature.

Customers will order EP when they require a non-diverse four fiber loop and a four fiber hand-off to enable EP on their compatible ADM customer premises equipment as described in Technical Publication GR-253-CORE. The figure below illustrates when a CT is ordered with EP.

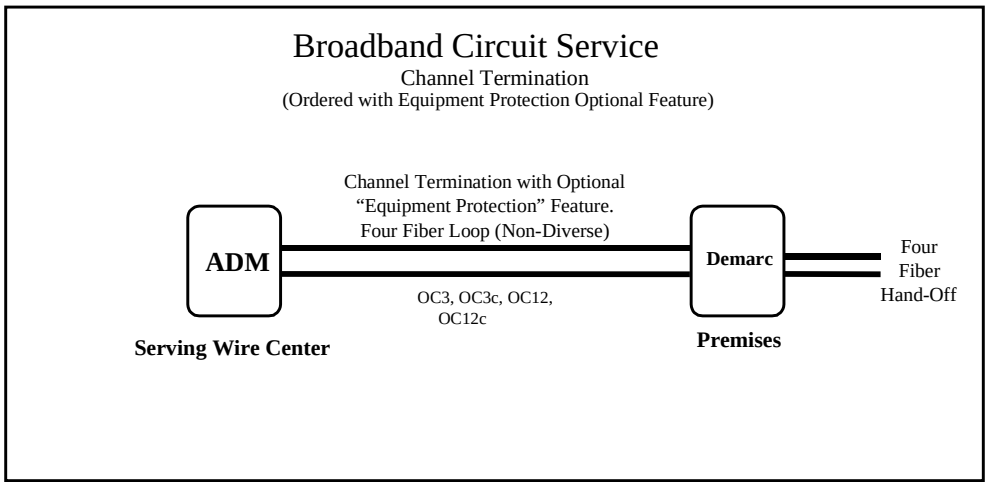

* Effective, January 11, 2002, BCS will no longer be available to customers. Grandfathered BCS Customers will maintain their existing service arrangement until their contract expires unless they choose to convert to another service. No changes to existing BCS service arrangements will be permitted, nor will any renewals be allowed. (N) (N)

20. Broadband Circuit Service (BCS)* (Cont'd) (C)

20.2 Rate Regulations (Cont'd)

D. Optional Features (Cont'd)

2. Loop Redundancy

Loop Redundancy (LR) is a CT optional feature that provides for automatic restoration of BCS in the event of either a BCS local loop failure or an equipment line card failure. LR features two physically diverse fiber routes between the first man-hole near the customer's premises and their serving wire center, and is provisioned with a four fiber hand-off to the customer. Dual-entrance facilities into the customer's premises are not included with LR. LR relies upon a customer provided ADM for protection switching functions that are compatible with the Telephone Company's ADM in the serving wire center. To provide equipment line card protection, LR includes the EP optional feature as specified in 19.2(D)(1) preceding. LR is only available where compatible equipment and facilities exist.

A customer would order LR when they require a diverse four fiber loop and a four fiber hand-off to enable LR (and EP) capability on their Customer Premises Equipment ADM. The figure below illustrates when a CT is ordered with LR.

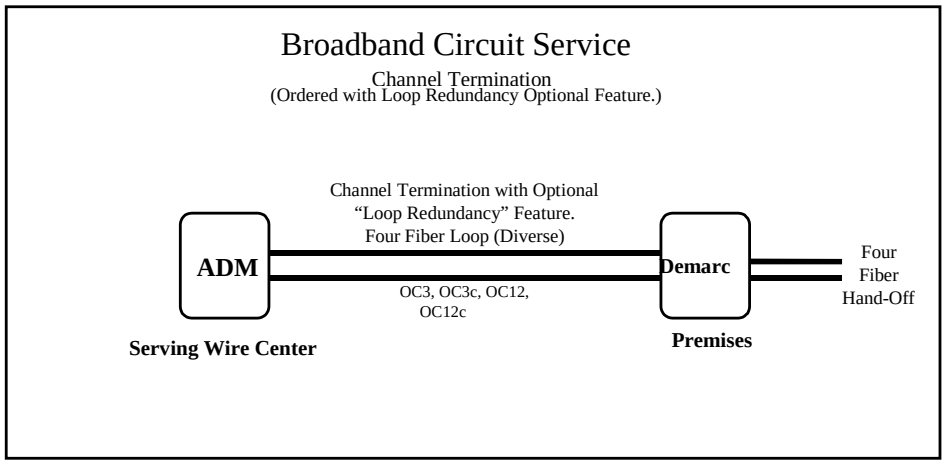

* Effective, January 11, 2002, BCS will no longer be available to customers. Grandfathered BCS Customers will maintain their existing service arrangement until their contract expires unless they choose to convert to another service. No changes to existing BCS service arrangements will be permitted, nor will any renewals be allowed. (N) (N)

20. Broadband Circuit Service* (Cont'd) (C)

20.2 Rate Regulations (Cont'd)

D. Optional Features (Cont'd)

3. Central Office Multiplexing

Central Office Multiplexing (CO-MUX) provides an arrangement in a Telephone Company Hub Central Office that demultiplexes a non-concatenated BCS (e.g., OC-3, OC-12) into a mix of lower speed signals. The mix of demultiplexed signals cannot exceed the maximum bandwidth of the higher speed BCS circuit terminated on CO-MUX. Availability of CO-MUX equipment is dependent upon the overall bandwidth of the high-speed circuit being terminated on the multiplexer (e.g., OC-12 BCS) and the desired lower demultiplexed speeds. If asynchronous DS-1 ports are required on an OC-12 BCS circuit, then the OC-3 CO-MUX feature and associated DS-1 ports must be ordered in addition to the OC-12 CO-MUX feature. CO-MUX can only be ordered in conjunction with a BCS circuit. The customer must provide configuration information for the entire multiplexing option at the time the order for the service is placed.

CO-MUX consists of two types of monthly charges; 1) a System Arrangement charge (use of the Central Office Multiplexer), and 2) a Port charge (by available interface and speed.) The figure below illustrates when a CT is ordered with CO-MUX.

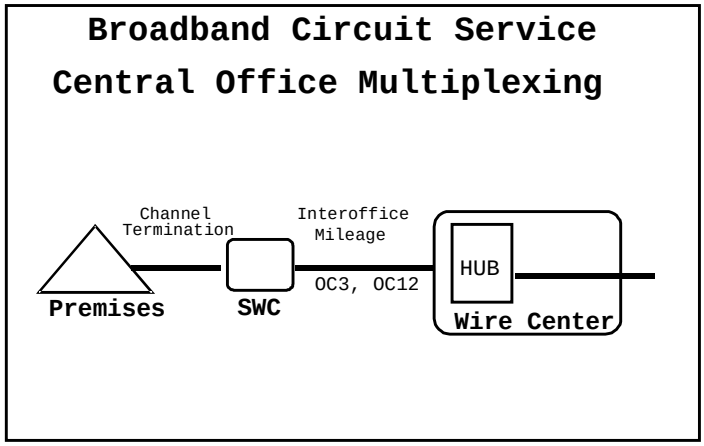

* Effective, January 11, 2002, BCS will no longer be available to customers. Grandfathered BCS Customers will maintain their existing service arrangement until their contract expires unless they choose to convert to another service. No changes to existing BCS service arrangements will be permitted, nor will any renewals be allowed. (N) (N)

(This page filed under Transmittal No. 7)

20. Broadband Circuit Service* (Cont'd) (C)

20.2 Rate Regulations (Cont'd)

D. Optional Features (Cont'd)

3. Central Office Multiplexing (Cont'd)

a. Central Office Multiplexing System Arrangements

1. OC-3 Central Office Multiplexing (OC-3 CO-MUX)

An OC-3 CO-MUX System Arrangement supports the maximum capacity of BCS OC-3 bandwidth with up to: 1) three asynchronous DS-3 signals; or 2) up to three groups of 28 asynchronous DS-1 signals VT mapped to up to three STS-1 channels. A monthly charge applies to each OC-3 System Arrangement ordered. Lower-speed ports are ordered individually, as follows in 20.3.1(C)(3)(b), depending on the BCS bandwidth available.

2. OC-12 Central Office Multiplexing (OC-12 CO-MUX)[1]

An OC-12 CO-MUX System Arrangement supports the maximum capacity of BCS OC-12 bandwidth with up to: 1) twelve asynchronous DS-3 signals; or 2) up to four OC-3 channels; or 3) up to four OC-3c channels[2]. A monthly charge applies to each OC-12 System Arrangement ordered. Lower-speed ports are ordered individually, as follows in 20.3.2(C)(3)(b), depending on the BCS bandwidth available.

(1) If asynchronous DS-1 signals are to be multiplexed from an OC-12 BCS circuit, an OC-3 CO-MUX System Arrangement with associated DS-1 ports must be ordered in addition to the OC-12 CO-MUX System Arrangement with associated OC-3 port.

(2) If OC-3c circuits are ordered under the OC-12 Central Office Multiplexing Feature, the customer must originate the OC-3c at their premises. The Telephone Company cannot convert individual STS-1 signals to OC-3c channels. In addition, the customer must specify the drop port transport rates for each equivalent STS-1 transported in the BCS circuit. (For example, the customer must specify 12 STS-1s for an OC-12 BCS terminating at the Telephone Company Hub Central Office.)

* Effective, January 11, 2002, BCS will no longer be available to customers. Grandfathered BCS Customers will maintain their existing service arrangement until their contract expires unless they choose to convert to another service. No changes to existing BCS service arrangements will be permitted, nor will any renewals be allowed. (N) (N)

20. Broadband Circuit Service* (Cont'd) (C)

20.2 Rate Regulations (Cont'd)

D. Optional Features (Cont'd)

3. Central Office Multiplexing (Cont'd)

b. Central Office Multiplexing Ports

1. OC-3 BCS Central Office Multiplexing Ports

a. DS-1 Port

Converts an OC-3 signal to a maximum of 84 asynchronous DS-1 signals.

b. DS-3 Port

Converts an OC-3 signal to a maximum of three asynchronous DS-3 signals.

* Effective, January 11, 2002, BCS will no longer be available to customers. Grandfathered BCS Customers will maintain their existing service arrangement until their contract expires unless they choose to convert to another service. No changes to existing BCS service arrangements will be permitted, nor will any renewals be allowed. (N) (N)

(This page filed under Transmittal No. 7)

20. Broadband Circuit Service* (Cont'd) (C)

20.2 Rate Regulations (Cont'd)

D. Optional Features (Cont'd)

3. Central Office Multiplexing (Cont'd)

b. Central Office Multiplexing Ports (Cont'd)

2. OC-12 BCS Central Office Multiplexing Ports[1]

a. DS-3 Port

Converts an OC-12 signal to a maximum of twelve asynchronous DS-3 signals.

b. OC-3 Port

Converts an OC-12 signal to a maximum of four OC-3 channels.

c. OC-3c Port[2]

Converts an OC-12 signal to a maximum of four OC-3c channels.

(1) If asynchronous DS-1 signals are to be multiplexed from an OC-12 BCS circuit, an OC-3 CO-MUX System Arrangement with associated DS-1 ports must be ordered in addition to the OC-12 CO-MUX System Arrangement with associated OC-3 port.

(2) If OC-3c circuits are ordered under the OC-12 Central Office Multiplexing Feature, the customer must originate the OC-3c at their premises. The Telephone Company cannot convert individual STS-1 signals to OC-3c channels. In addition, the customer must specify the drop port transport rates for each equivalent STS-1 transported in the BCS circuit. (For example, the customer must specify 12 STS-1s for an OC-12 BCS terminating at the Telephone Company Hub Central Office.)

* Effective, January 11, 2002, BCS will no longer be available to customers. Grandfathered BCS Customers will maintain their existing service arrangement until their contract expires unless they choose to convert to another service. No changes to existing BCS service arrangements will be permitted, nor will any renewals be allowed. (N) (N)

20. Broadband Circuit Service* (Cont'd) (C)

20.2 Rate Regulations (Cont'd)

D. Optional Features (Cont'd)

3. Central Office Multiplexing (Cont'd)

b. Central Office Multiplexing Ports (Cont'd)

Where compatible facilities and equipment exist, CO-MUX Ports can interconnect with other compatible Telephone Company provided special access services as supported by the tariff.

E. Monthly Rates

Monthly Rates apply to Channel Termination, Interoffice Mileage and Optional Features.

F. Nonrecurring Charges

Non-recurring charges apply to Channel Termination, Central Office Multiplexing, Equipment Protection, Loop Redundancy, Moves, Service-to-Service Through Connect Arrangements and STS-1 Reconfigurations. Nonrecurring BCS installation charges will not apply to existing similar services, filed under Section 12, Specialized Service or Arrangement, that are converted to BCS.

G. Minimum Billing Periods

The Minimum Billing Period for BCS is one year. In the event BCS is terminated prior to completion of the minimum billing period, termination liabilities as described in 20.2(J) will apply.

* Effective, January 11, 2002, BCS will no longer be available to customers. Grandfathered BCS Customers will maintain their existing service arrangement until their contract expires unless they choose to convert to another service. No changes to existing BCS service arrangements will be permitted, nor will any renewals be allowed. (N)

20. Broadband Circuit Service* (Cont'd) (C)

20.2 Rate Regulations (Cont'd)

H. Term Pricing Plans (TPP)

1. General Description

Term Pricing Plans (TPP) are available on Channel Termination, Interoffice Mileage and Central Office Multiplexing monthly rate elements. The TPP stabilizes rates for BCS for the specified period of time. The following TPPs are available:

- Three Year TPP, or
- Five Year TPP.

2. Modifications

When additional like-speed BCS circuits are purchased, the customer may include the additional circuits in an existing TPP if:

- The customer renegotiates their TPP for a period of time equal or greater than the time remaining on the existing TPP;
- The circuits are the same speed; and
- The circuits are located between the same customer designated premises.

3. Renewals

At the end of a TPP period, the customer must select one of the following options within one month prior to the expiration date:

a. Renew the service for a three or five year TPP as provided in this tariff;
b. Elect to disconnect the service upon expiration of the billing period; or
c. Continue the service on a month-to-month basis at the current one year billing period tariff rates.

All services under an existing TPP that are not renewed within the period stated above will revert to Option 3c above and be billed at the current one year (month-to-month) tariff rates.

* Effective, January 11, 2002, BCS will no longer be available to customers. Grandfathered BCS Customers will maintain their existing service arrangement until their contract expires unless they choose to convert to another service. No changes to existing BCS service arrangements will be permitted, nor will any renewals be allowed. (N) (N)

(This page filed under Transmittal No. 7)

20. Broadband Circuit Service* (Cont'd) (C)

20.2 Rate Regulations (Cont'd)

H. Term Pricing Plans (TPP) (Cont'd)

4. Conversions

If there is at least one month remaining on an existing 3 year TPP, the customer may convert the service to a higher term TPP without termination liability and, at the time of the access order to convert, retain the service for the period remaining on the higher term TPP. No retroactive TPP discounts will apply prior to the order date.

For example; a customer with an existing 3 Year TPP with 11 months remaining elects to convert to a 5 Year TPP. At the time of the order, the customer will begin paying the 5 year TPP rate for the remaining period of 2 years and 11 months (35 months) on the new TPP.

I. Volume Option

The Volume Option offers rate reductions on two or more BCS circuits purchased under a three or five year TPP. The Volume Option is provided on like-speed BCS circuits ordered under the following conditions:

1. The two or more like-speed BCS circuits are on the same service order whether concatenated or non-concatenated;

2. The two or more BCS circuits are purchased under a three or five year TPP;

3. The two or more BCS circuits are ordered between the same customers designated premises; and

* Effective, January 11, 2002, BCS will no longer be available to customers. Grandfathered BCS Customers will maintain their existing service arrangement until their contract expires unless they choose to convert to another service. No changes to existing BCS service arrangements will be permitted, nor will any renewals be allowed. (N) (N)

20. Broadband Circuit Service* (Cont'd) (C)

20.2 Rate Regulations (Cont'd)

I. Volume Option (Cont'd)

4. If the one or more additional like-speed BCS circuits are ordered under the following conditions:

a. The additional circuit(s) accompany at least one or more existing non-discounted like-speed BCS circuit(s) with the same customer premises (end-points) and total at least two BCS circuits,

b. The additional circuit(s) is placed under a TPP billing period that equals or exceeds the highest remaining billing period for one of the existing BCS circuits. (e.g., If one BCS circuit is non-discounted, then a minimum three year TPP must be purchased to qualify for a Volume Option. If an existing BCS circuit has two years and 11 months left on a three year TPP, and another BCS circuit is ordered, then a minimum of a three year TPP is required for the two circuits to qualify for a Volume Option discount); and

c. Termination liabilities will apply for early disconnection of circuits.

In the event the BCS circuits are not "like-speed" (or otherwise vary in speed such as OC-3 compared to OC-12), or vary in circuit termination end-points, a separate Volume Option would be required for the circuits.

* Effective, January 11, 2002, BCS will no longer be available to customers. Grandfathered BCS Customers will maintain their existing service arrangement until their contract expires unless they choose to convert to another service. No changes to existing BCS service arrangements will be permitted, nor will any renewals be allowed. (N)

ACCESS SERVICE

20. Broadband Circuit Service* (Cont'd) (C)

20.2 Rate Regulations (Cont'd)

J. Termination Liability

Termination Liability will apply in the event BCS is terminated prior to the expiration of the billing period. The termination liability will utilize the following termination percentage:

Billing Period	Termination Percentage
1 year	45%
3 year	35%
5 year	25%

The termination liability is calculated as follows:

$$\left[\begin{array}{c}\text{Monthly}\\ \text{Rate}\end{array} \times \begin{array}{c}\text{Months Remaining}\\ \text{in Billing Period}\end{array}\right] \times \left[\begin{array}{c}\text{Termination}\\ \text{Percentage}\end{array}\right]$$

Example: A customer with a $10,000 monthly rate terminates service with 10 months remaining in a 3 year billing period. The termination liability would be calculated as:

($10,000 x 10 mo) x (0.35) = $35,000 Termination Liability.

Under the following conditions, a termination liability will not apply:

1. The customer modifies service as set forth under Moves, (Section 20.2(K) following) as long as the customer maintains the same or greater number of BCS circuits;

2. The customer modifies service as described under Modification of Service, (Section 20.2(L) following); or

3. The customer replaces another special access service with BCS subject to the following criteria:

   a. Both BCS end points must be the same as the existing special access service end points that it replaces;
   b. The Minimum Billing Period for BCS must be greater than or equal to the remaining special access service Billing Period; and
   c.

The total Minimum Billing Period revenue for BCS must be greater than or equal to the remaining Billing Period revenue for the special access service.

* Effective, January 11, 2002, BCS will no longer be available to customers. Grandfathered BCS Customers will maintain their existing service arrangement until their contract expires unless they choose to convert to another service. No changes to existing BCS service arrangements will be permitted, nor will any renewals be allowed. (N)

(This page filed under Transmittal No. 7)

ACCESS SERVICE

20. Broadband Circuit Service* (Cont'd) (C)

20.2 Rate Regulations (Cont'd)

K. Moves

Moves involve a change in the physical location of one of the following:

- Service facility;
- Point of Termination at the customer's premises; or
- Customer's premises.

Move charges are dependent upon the type of move requested by the customer.

1. Service Facility Move (SFM)

A Service Facility Move is a customer-initiated move of one end of a Telephone Company Central Office distribution link (e.g., jumper cable, DSX patch cable, etc.) from one facility to another existing facility of the same or higher transmission speed. All activity associated with the SFM must occur within a single Telephone Company Hub Central Office. Rates for SFMs are one-time, nonrecurring charges.

In order to be considered a SFM, all associated order activity (disconnects and new connects) must occur simultaneously and the facility to which service is being moved must exist and have sufficient capacity to accept the moved service. A SFM may result in the change of one end point (e.g. customer premises location) of the circuit involved provided the following conditions are met:

* Effective, January 11, 2002, BCS will no longer be available to customers. Grandfathered BCS Customers will maintain their existing service arrangement until their contract expires unless they choose to convert to another service. No changes to existing BCS service arrangements will be permitted, nor will any renewals be allowed. (N) (N)

(This page filed under Transmittal No. 7)

20. Broadband Circuit Service* (Cont'd) (C)

20.2 Rate Regulations (Cont'd)

K. Moves (Cont'd)

1. Service Facility Move (SFM) (Cont'd)

a. The change of customer premises can only occur on the end of the circuit which has the Connecting Facility Arrangement (CFA); and

b. The customer premises locations involved in the change belongs to the same customer,

OR

c. The customer premises locations involved in the change belongs to two different customers, but the customer requesting the SFM has previously coordinated the activity such that all activity (disconnects and new connects) will occur simultaneously. If this coordination has not been accomplished beforehand, then the Telephone Company will proceed with the disconnect/new connect orders as non-related and new installation charges will apply for services being relocated.

BCS SFMs may be performed at the following like-speed and interface service levels:

- OC-3 to OC-3 level;
- OC-3c to OC-3c level;
- OC-12 to OC-12 level; or
- OC-12c to OC-12c level.

* Effective, January 11, 2002, BCS will no longer be available to customers. Grandfathered BCS Customers will maintain their existing service arrangement until their contract expires unless they choose to convert to another service. No changes to existing BCS service arrangements will be permitted, nor will any renewals be allowed. (N)

ACCESS SERVICE

20. Broadband Circuit Service* (Cont'd) (C)

20.2 Rate Regulations (Cont'd)

K. Moves (Cont'd)

1. Service Facility Move (SFM) (Cont'd)

The following are examples of when BCS SFM Charges would apply:

a. Rearranging an existing BCS circuit from one port to another port in the same Telephone Company Hub Central Office multiplexer;

b. Rearranging an existing BCS circuit from one multiplexer to another multiplexer in the same serving wire center; or

c. Rearranging an existing BCS Channel Termination (CT) to a port of an existing multiplexed higher speed service in the same serving wire center. For example: an OC-3 BCS CT is terminated on low-speed port of a Telephone Company Hub Central Office multiplexer; whereby the Hub is billed to the higher speed service, such as an OC-12 BCS. In this instance, there is an SFM charge for moving the CT from another multiplexer within the Central Office to this one. No SFM charge will apply to subtending services of the service incurring the SFM as long as there is no change to the subtending services.

2. Moves of Point of Termination

A move of a Point of Termination of an existing service to a new location within the same customer premises may be provided, at the customer's request, on a time sensitive basis. Rates and charges as set forth in Section 13, preceding, will apply. No change in billing period is required.

* Effective, January 11, 2002, BCS will no longer be available to customers. Grandfathered BCS Customers will maintain their existing service arrangement until their contract expires unless they choose to convert to another service. No changes to existing BCS service arrangements will be permitted, nor will any renewals be allowed. (N)

(This page filed under Transmittal No. 7)

20. Broadband Circuit Service* (Cont'd) (C)

20.1 Rate Regulations (Cont'd)

K. Moves (Cont'd)

3. Moving Customer Premises

A move of existing service may be provided at the customer's request. The customer will be billed 5% of the normal BCS termination charge. Following the payment of applicable termination charges, customer will be responsible for any non-recurring charges associated with the reconnection of the service (e.g., BCS CT Installation Charge).

In the event a change involves a physical move of the point of termination at the customer's premises or a move of the customer's premises, a "Move" charge will apply. If the move of the customer's premises is as a result of an SFM, stated earlier, and the facility to the new premises is existing, then termination charges will not apply. No non-recurring charges will apply for that end of the channel or circuit except the applicable SFM charge.

One end of a BCS circuit (e.g., the customer premises) may be moved without termination liability provided the following circumstances exist:

a. Customer maintains the same level and commitment of service (e.g., quantity of like-speed and interface BCS circuits and billing period length.)
b. All equipment and transport facilities exist at the new location.

Charges for this one-ended move shall be on a time sensitive charge basis. The rates and charges that are set forth in Section 13, preceding will apply.

The following diagrams illustrate typical service arrangements before and after an SFM has occurred.

* Effective, January 11, 2002, BCS will no longer be available to customers. Grandfathered BCS Customers will maintain their existing service arrangement until their contract expires unless they choose to convert to another service. No changes to existing BCS service arrangements will be permitted, nor will any renewals be allowed. (N)

20. Broadband Circuit Service* (Cont'd) (C)

20.1 Rate Regulations (Cont'd)

K. Moves (Cont'd)

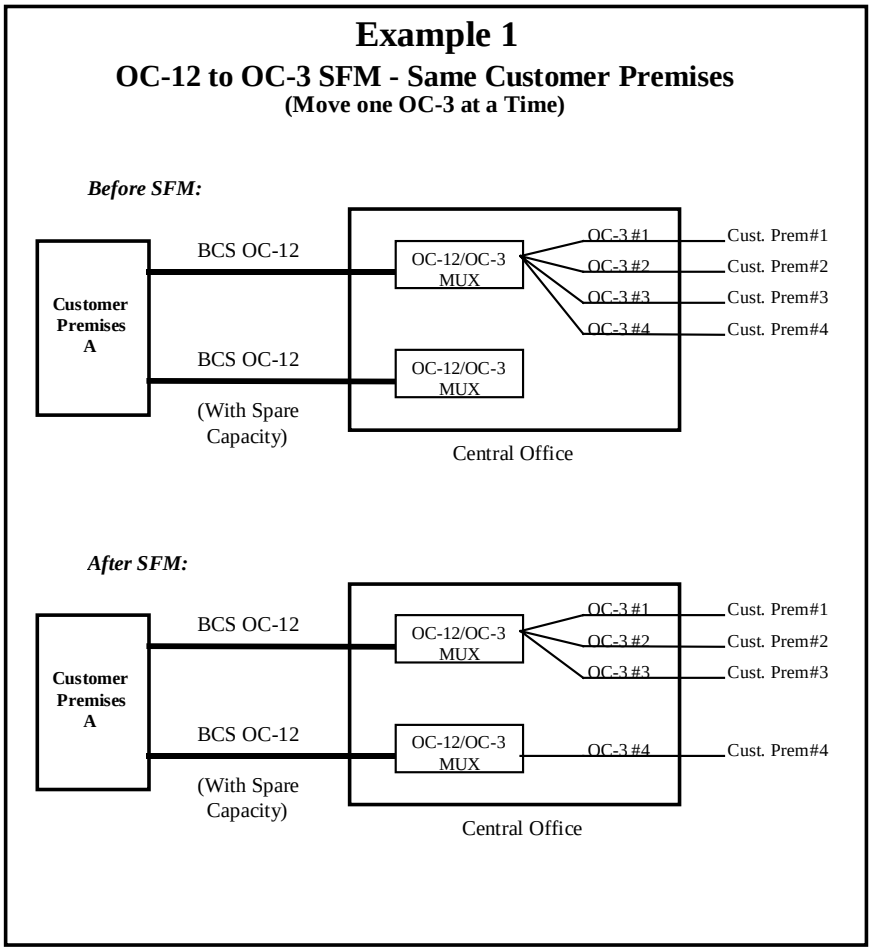

* Effective, January 11, 2002, BCS will no longer be available to customers. Grandfathered BCS Customers will maintain their existing service arrangement until their contract expires unless they choose to convert to another service. No changes to existing BCS service arrangements will be permitted, nor will any renewals be allowed. (N) | (N)

20. Broadband Circuit Service* (Cont'd) (C)

20.2 Rate Regulations (Cont'd)

K. Moves (Cont'd)

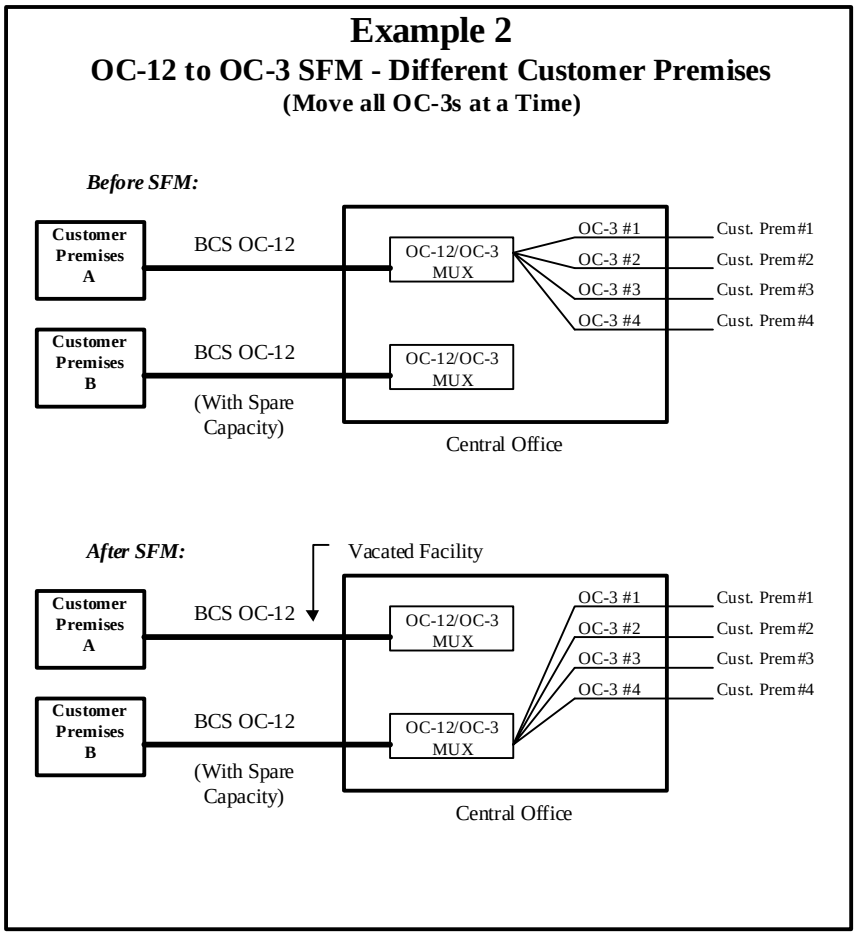

* Effective, January 11, 2002, BCS will no longer be available to customers. Grandfathered BCS Customers will maintain their existing service arrangement until their contract expires unless they choose to convert to another service. No changes to existing BCS service arrangements will be permitted, nor will any renewals be allowed. (N) | (N)

20. Broadband Circuit Service* (Cont'd) (C)

20.2 Rate Regulations (Cont'd)

K. Moves (Cont'd)

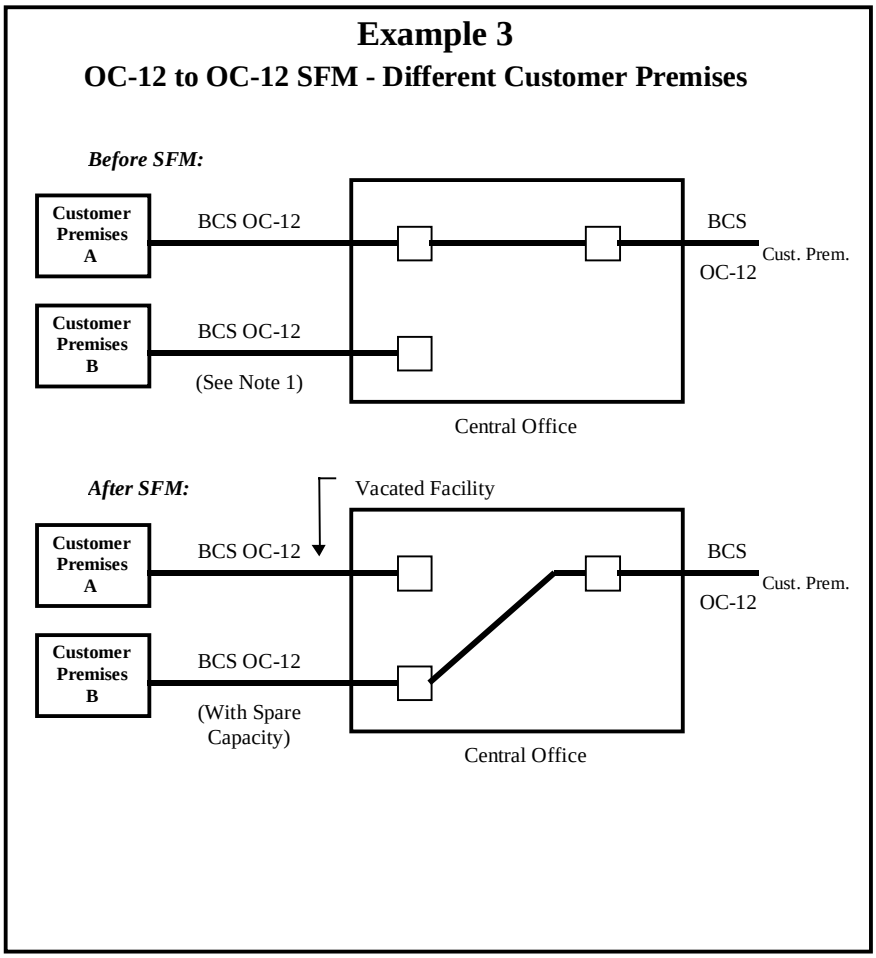

* Effective, January 11, 2002, BCS will no longer be available to customers. Grandfathered BCS Customers will maintain their existing service arrangement until their contract expires unless they choose to convert to another service. No changes to existing BCS service arrangements will be permitted, nor will any renewals be allowed. (N)

ACCESS SERVICE

20. Broadband Circuit Service* (Cont'd) (C)

20.2 Rate Regulations (Cont'd)

L. Modification of Service

The customer may request to modify BCS (i.e., establish a new billing period, add rate elements to existing service, a change in existing multiplexing port configuration, or change an existing STS-1 configuration) provided the service end points remain the same, and there are existing facilities and equipment in place to provision the requested modification.

Modification of Service are changes to existing services which do not result in either a change in the physical point of termination at the customer's premises, or the customer's end-user premises. Under Modification of Service, all BCS rate element terms and conditions apply, including the applicable recurring and nonrecurring charges as set forth under the minimum billing period or Term Pricing Plan as the existing BCS service being modified.

1. Establishing New Billing Period: When a new billing period is requested, the following conditions must be met:

   a. A new billing period is established which includes a new minimum service period (i.e., one year minimum);

   b. The expiration of the new billing period must extend to or beyond the expiration of the existing billing period;

   c. The total revenue, based on recurring rates, over the revised billing period must be equal to or greater than the remaining revenue from the existing billing period;

   d. The service end points must remain the same.

2. Port Modification Charge: On non-concatenated OC3 or OC12 BCS circuits configured between a customer designated premises and a Telephone Company Hub Central Office, a port modification charge (recurring and nonrecurring) would apply under the following conditions:

   a. A customer modifies an existing multiplexing port configuration that requires the disconnection of one existing port and the installation of a replacement port at the same speed, (e.g., a request to replace an OC-3c port with an OC-3 port on an OC-12 BCS).

* Effective, January 11, 2002, BCS will no longer be available to customers. Grandfathered BCS Customers will maintain their existing service arrangement until their contract expires unless they choose to convert to another service. No changes to existing BCS service arrangements will be permitted, nor will any renewals be allowed. (N)

20. Broadband Circuit Service (Cont'd) (C)

20.2 Rate Regulations (Cont'd)

L. Modification of Service (Cont'd)

2. Port Modification Charge (Cont'd)

b. A customer modifies an existing multiplexing port configuration that requires the disconnection of one or more existing ports and the installation of one or more different ports that do not exceed the aggregate bandwidth of the disconnected port, (e.g., a request to replace three DS3 ports with an OC-3 port on an OC-12 BCS).

c. A customer orders an additional port for an existing multiplexing configuration, which does not result in the disconnection of existing multiplexing ports.

3. STS-1 Channel Reconfiguration Charge: On non-concatenated OC12 BCS circuits configured as:

- Premises-to-Premises,

  Or

- Premises-to-Hub that interconnect with another like-speed OC12 BCS circuit using a Service-to-Service Through Connect Arrangement,

A customer may change the Synchronous Transport Signal-1 (STS-1) configuration on their existing non-concatenated BCS circuit to permit the transmission of lower speed concatenated signals through the Telephone Company network (i.e., STS-3c). This charge does not apply to OC3, OC3c or OC12c BCS circuits configured as premises-to-premises or (if applicable) premise-to-hub when the Central Office Multiplexing feature is involved. The STS-1 Reconfiguration Charge does not apply as well to OC12 circuits configured as premise-to-hub with the Central Office Multiplexing feature.

This charge is a non-recurring charge, to be applied on a per circuit, per service order change basis. When reconfiguring the STS-1s of an OC12 circuit, there will be a service disruption of that circuit when the channels are reconfigured. Any available service level guarantees will not be applied during this outage. If the customer wishes to revert back to their original STS-1 configuration, a separate STS-1 Channel Reconfiguration Charge will apply. The following are examples where the STS-1 Channel Reconfiguration Charge applies:

* Effective, January 11, 2002, BCS will no longer be available to customers. Grandfathered BCS Customers will maintain their existing service arrangement until their contract expires unless they choose to convert to another service. No changes to existing BCS service arrangements will be permitted, nor will any renewals be allowed. (N) | (N)

20. Broadband Circuit Service* (Cont'd) (C)

20.2 Rate Regulations (Cont'd)

L. Modification of Service (Cont'd)

3. STS-1 Channel Reconfiguration Charge (Cont'd)

Example 1: A premise-to-premise OC12 BCS is ordered where the customer requests a configuration as twelve individual STS-1s with no request to concatenate STS-1s within that bandwidth (or group them together as contiguous STS-1s.) Six months later, the customer requests their existing OC12 BCS to utilize three STS-1 channels for transmission of concatenated STS-3c leaving nine STS-1 channels and one STS-3c channel. This customer-initiated change requires a separate order, which specifies the Connecting Facility Assignment (CFA), in which STS-1s are to be made contiguous within the OC12 BCS. This concatenated bandwidth will be identified with a circuit identification and a design layout report will be issued to the customer verifying the time slots used. To process this request, an STS-1 Channel Reconfiguration Charge will apply per circuit.

Example 2: If Example 1 above is reversed, whereby the customer requests their existing premise-to-premise, non-concatenated OC12 BCS to be configured as twelve STS-1 channels instead of one STS-3c and nine STS-1 channels, an STS-1 Channel Reconfiguration Charge will also apply per circuit.

Example 3: A premise-to-hub OC12 BCS circuit is ordered to be interconnected via a Service-to-Service Through Connect Arrangement to another premise-to-hub OC12 BCS circuit. As in Example 1, the customer requests a configuration as twelve individual STS-1s with no request to concatenate STS-1s within that bandwidth (or group them together as contiguous STS-1s.) Six months later, the customer requests their existing OC12 BCS circuits (both of them) to utilize three STS-1 channels for transmission of concatenated STS-3c leaving nine STS-1 channels and one STS-3c channel. This customer-initiated change requires a separate order, which specifies the Connecting Facility Assignment (CFA), in which STS-1s are to be made contiguous within each of the two OC12 BCS circuits. This concatenated bandwidth will be identified with a circuit identification and a design layout report will be issued to the customer verifying the time slots used. To process this request, an STS-1 Channel Reconfiguration Charge will apply per BCS circuit. In this example there are two BCS circuits, therefore, two charges would apply.

* Effective, January 11, 2002, BCS will no longer be available to customers. Grandfathered BCS Customers will maintain their existing service arrangement until their contract expires unless they choose to convert to another service. No changes to existing BCS service arrangements will be permitted, nor will any renewals be allowed. (N)

(This page filed under Transmittal No. 7)

20. Broadband Circuit Service* (Cont'd) (C)

20.2 Rate Regulations (Cont'd)

L. Modification of Service (Cont'd)

3. STS-1 Channel Reconfiguration Charge (Cont'd)

Example 4: If Example 3 above is reversed, whereby the customer requests their existing premise-to-hub, non-concatenated OC12 BCS to be configured as twelve STS-1 channels instead of one STS-3c and nine STS-1 channels, an STS-1 Channel Reconfiguration Charge will also apply per BCS circuit. The other through-connected BCS circuit would also require the same STS-1 configuration. In this example there are two BCS circuits, therefore, two charges would apply.

M. Shared Use

Shared Use is the provision of Switched Access and BCS over the same transmission path through the use of a common interface. Shared Use will only be available with BCS provided from a customer designated premises to a Telephone Company Hub Central Office. Regulations for shared use facilities are established in Sections 5.2.7, 6.7.12, and 7.2.7 preceding. Ordering provisions for shared use facilities are set forth in Section 5.2.7 (Shared Use) preceding.

Existing BCS facilities can be converted to shared use facilities by activating a portion of available capacity for Switched Access. While the customer may designate any percentage of BCS for Shared Use, credit will only be applied up to 50% of the voice-grade equivalent capacity provided in conjunction with BCS. Any charges associated with BCS Optional Features will be rated as 100% BCS. Services provided over shared use facilities are ordered, provided and rated either as Switched Access (i.e., Entrance Facility, Direct-Trunked Transport, Tandem-Switched Transport and Multiplexing) or as BCS (i.e. Channel Termination, Interoffice Mileage and Central Office Multiplexing) as set forth following:

1. On shared use facilities, the customer for the Switched Access Service may be different from the customer for the BCS. When the Switched Access customer is not the same as the BCS customer, all BCS charges and Switched Transport charges (including Switched Transport features charges) will be billed to the customer who initially ordered the facility. All other Switched Access charges will be separately billed to the customer who ordered the Switched Access Service;

* Effective, January 11, 2002, BCS will no longer be available to customers. Grandfathered BCS Customers will maintain their existing service arrangement until their contract expires unless they choose to convert to another service. No changes to existing BCS service arrangements will be permitted, nor will any renewals be allowed. (N) (N)

20. Broadband Circuit Service* (Cont'd) (C)

20.2 Rate Regulations (Cont'd)

M. Shared Use (Cont'd)

2. When an existing BCS facility is converted to a shared use facility by using an available portion of the capacity for Switched Access Service, the applicable nonrecurring charges (including the Access Order Charge) will be the nonrecurring charges associated with the Switched Access service being ordered;

3. The customer must place an order for each individual Switched Access Service of BCS utilizing the shared use facility and must also specify the channel assignment for each service;

4. All channels within a shared use facility will be rated and billed as set forth in the following:

a. When a DS-3 facility is ordered and provisioned as a Switched Access, all channels, including spares, will be rated and billed as Switched Access. A DS-3 facility is the minimum capacity that shared use can be applied to a BCS circuit.

b. When a DS-3 facility is ordered and provisioned as a Special Access High Capacity Service, all channels, including spares, will be rated and billed as Special Access until such time as DS-3 facility becomes shared use can be applied to a BCS circuit.

c. Once a DS-3 facility, ordered as either Switched or Special Access, becomes shared use, all spare channels on the DS-3 facility will be rated and billed as Switched Access.

d. On a BCS shared use facility, ordered either as Switched Access or BCS Special Access, the designated Switched Access Channels on the BCS facility must total the active and spare channels on each DS-3 facility (must total 28 DS-1 or 672 voice grade equivalents.) The following is an example where Switched Access would be placed on a BCS OC-3 facility:

* Effective, January 11, 2002, BCS will no longer be available to customers. Grandfathered BCS Customers will maintain their existing service arrangement until their contract expires unless they choose to convert to another service. No changes to existing BCS service arrangements will be permitted, nor will any renewals be allowed. (N)

(This page filed under Transmittal No. 7)

20. Broadband Circuit Service* (Cont'd) (C)

20.2 Rate Regulations (Cont'd)

M. Shared Use (Cont'd)

4. (Cont'd)

d. (Cont'd)

Example: A DS-3 channel within a BCS OC-3 facility is to be activated for shared use. The DS-3 channel contains 28 DS-1 channels and will be configured for 20 active and 8 spare channels (or 480 active and 192 spare voice-grade equivalent channels.) The DS-3 facility is considered 100% Switched Access and the shared use BCS OC-3 facility is prorated by one DS-3 channel or 28 DS-1 channels. This example is prorated as follows:

{ 1 DS-3 / 3 DS-3s available per OC-3 BCS }.

Conversion to voice-grade level is calculated as follows: {672 voice grade equivalents per DS-3/2016 voice grade equivalents per OC-3 BCS}.

If 6 of the 20 active DS-1 channels stated above are disconnected and become spare, the DS-3 facility will continue to be considered as 100% Switched Access, and be prorated as stated above.

If multiplexing is associated with the shared use facility, the monthly recurring rate for the Switched Access multiplexer would be prorated in the same manner as the Entrance Facility and Channel Termination. No DS-1 to DS0 multiplexing is available with BCS as this feature is available under existing DS-1 service tariffs.

e. Channels being used in conjunction with CCS/SS7 Interconnection Service are included in the channel counts for Switched Access.

5. Customers requesting Service Facility Moves (SFM) of shared use facilities will be assessed nonrecurring charges as specified in Section 20.2(K)(1) (Service Facility Moves) preceding.

* Effective, January 11, 2002, BCS will no longer be available to customers. Grandfathered BCS Customers will maintain their existing service arrangement until their contract expires unless they choose to convert to another service. No changes to existing BCS service arrangements will be permitted, nor will any renewals be allowed. (N)

(This page filed under Transmittal No. 7)

20. Broadband Circuit Service* (Cont'd) (C)

20.2 Rate Regulations (Cont'd)

N. Jointly Provided Service

Jointly Provided Service is where one end of a BCS circuit is located in one exchange telephone company operating territory and the other end of the service is located in another exchange telephone company operating territory. Jointly Provided Service and associated billing arrangements are described in Section 2.4.8, preceding.

Jointly Provided Service is also referred to as "meet-point-billing arrangements." These arrangements are not currently available with Broadband Circuit Service.

O. Conversions of Existing Similar Services Filed As Specialized Services or Arrangements to the BCS General Tariff Offering

The conversion of services, that are similar in description to BCS, to the general BCS tariff offering applies only to those purchased on an Individual Case Basis and currently filed under Section 12, Specialized Service or Arrangement. Within 60 days following the effective date of this tariff, the customer is required to either convert to the general tariff offering or terminate any existing service as filed under Section 12. If the customer chooses to convert to the general tariff offering, the customer will convert to a billing period that is equal to or greater than the period remaining on their existing service, but not less than the minimum billing period of one year, and be charged the applicable recurring rates for that period as shown in Section 20.3 following. Termination charges and nonrecurring BCS installation charges will not apply if the customer chooses to convert their service, filed under Section 12, to the general tariff offering.

P. Ordering Options and Conditions

BCS is ordered under the Access Order provisions set forth in Section 5 (Ordering for Access Service) preceding. Also included in Section 5 are the other charges which may be associated with ordering BCS(e.g., Service Date Change Charges, Cancellation Charges, etc.)

* Effective, January 11, 2002, BCS will no longer be available to customers. Grandfathered BCS Customers will maintain their existing service arrangement until their contract expires unless they choose to convert to another service. No changes to existing BCS service arrangements will be permitted, nor will any renewals be allowed. (N)

20. Broadband Circuit Service* (Cont'd) (C)

20.2 Rate Regulations (Cont'd)

Q. Collocation Transport

Collocation Transport provides for the transmission facilities between collocation arrangements located in Telephone Company Central Offices.

There are two components of Collocation Transport.

(1) Inter/Intra Office Fixed

Inter/Intra office fixed rate element provides for the electronic equipment required to terminate a channel between two collocation arrangements located either in the same central office (intra) or in two separate central offices (inter).

(2) Inter Office Per Mile

The Per Mile charge provides for the electronic equipment and facilities necessary to provide the interoffice transport between two collocation arrangements.

(R) Interconnection Arrangement with Other Special Access Services

A BCS Circuit can interconnect with another Special Access Service of a higher speed via a cross-connect facility in the following manner:

(1) BCS OC-3/OC-3c with SONET Ring and Access Service (SRAS) OC-12
(2) BCS OC-3/OC-3c with SONET Ring and Access Service (SRAS) OC-48
(3) BCS OC-12/OC-12c with SONET Ring and Access Service (SRAS) OC-48

* Effective, January 11, 2002, BCS will no longer be available to customers. Grandfathered BCS Customers will maintain their existing service arrangement until their contract expires unless they choose to convert to another service. No changes to existing BCS service arrangements will be permitted, nor will any renewals be allowed. (N)

(This page filed under Transmittal No. 7)

ACCESS SERVICE

20. Broadband Circuit Service* (Cont'd)

20.3 Rates and Charges

20.3.1 OC-3

(A) Channel Termination

– per BCS Circuit, per Customer Premises

Volume Option	USOC	Monthly Rate 1 year	Monthly Rate 3 year	Monthly Rate 5 year	Nonrecurring Charges 1 year	Nonrecurring Charges 3 year	Nonrecurring Charges 5 year
	T6XBX/T6XB+	$4,000(R)	$2,930	$1,500(R)	$2,000	$1,000	$0
2 plus	T6XEX/T6XE+	n/a	$2,635	$1,670	n/a	$ 750	$0

* Effective, January 11, 2002, BCS will no longer be available to customers. Grandfathered BCS Customers will maintain their existing service arrangement until their contract expires unless they choose to convert to another service. No changes to existing BCS service arrangements will be permitted, nor will any renewals be allowed.

Rates contained in this transmittal are subject to subsequent adjustment, effective retrospectively, in the event the Commission or a court subsequently authorizes Nevada to correct its rates pursuant to pending motions, or petitions for reconsideration or waiver, or in the event of any other adjustment to an order of the Commission or a court.

(This page filed under Transmittal No. 44)

20. Broadband Circuit Service* (Cont'd)

20.3 Rates and Charges (Cont'd)

20.3.1 OC-3 (Cont'd)

(B) Mileage

– per BCS Circuit

(1) Fixed

	Monthly Rate			Nonrecurring Charges		
USOC	1 year	3 year	5 year	1 year	3 year	5 year
1HYBS/1HYB+	$1,600	$1,400	$1,000(R)	$0	$0	$0

(2) Per Mile

	Monthly Rate			Nonrecurring Charges		
USOC	1 year	3 year	5 year	1 year	3 year	5 year
1HYBS/1HYB+	$193	$154	$110	$0	$0	$0

* Effective, January 11, 2002, BCS will no longer be available to customers. Grandfathered BCS Customers will maintain their existing service arrangement until their contract expires unless they choose to convert to another service. No changes to existing BCS service arrangements will be permitted, nor will any renewals be allowed.

Rates contained in this transmittal are subject to subsequent adjustment, effective retrospectively, in the event the Commission or a court subsequently authorizes Nevada to correct its rates pursuant to pending motions, or petitions for reconsideration or waiver, or in the event of any other adjustment to an order of the Commission or a court.

20. Broadband Circuit Service* (Cont'd)

20.3 Rates and Charges (Cont'd)

20.3.1 OC-3 (Cont'd)

(C) Optional Features

(1) Equipment Protection
Per Channel Termination, per Customer Premises

	Monthly Rate			Nonrecurring Charges		
USOC	1 year	3 year	5 year	1 year	3 year	5 year
APPBX/APPB+	$195	$195	$195	$150(R)	$75(R)	$0

(2) Loop Redundancy
Per Channel Termination, per Customer Premises

	Monthly Rate			Nonrecurring Charges		
USOC	1 year	3 year	5 year	1 year	3 year	5 year
DVDLX/DVDL+	$390	$390	$390	$600	$300	$0

* Effective, January 11, 2002, BCS will no longer be available to customers. Grandfathered BCS Customers will maintain their existing service arrangement until their contract expires unless they choose to convert to another service. No changes to existing BCS service arrangements will be permitted, nor will any renewals be allowed.

Rates contained in this transmittal are subject to subsequent adjustment, effective retrospectively, in the event the Commission or a court subsequently authorizes Nevada to correct its rates pursuant to pending motions, or petitions for reconsideration or waiver, or in the event of any other adjustment to an order of the Commission or a court.

ACCESS SERVICE

20. Broadband Circuit Service* (Cont'd) (C)

20.3 Rates and Charges (Cont'd)

20.3.1 OC-3 (Cont'd)

(C) Optional Features (Cont'd)

(3) Central Office Multiplexing

(a) Central Office Multiplexing System Arrangement

- Per OC-3 System Arrangement

	Monthly Rate			Nonrecurring Charges		
USOC	1 year	3 year	5 year	1 year	3 year	5 year
MXNBX/MXNB+	$1,800	$1,200	$950	$600	$300	$0

* Effective, January 11, 2002, BCS will no longer be available to customers. Grandfathered BCS Customers will maintain their existing service arrangement until their contract expires unless they choose to convert to another service. No changes to existing BCS service arrangements will be permitted, nor will any renewals be allowed. (N) (N)

(This page filed under Transmittal No. 7)

ACCESS SERVICE

20. Broadband Circuit Service* (Cont'd) (C)

20.3 Rates and Charges (Cont'd)

20.3.1 OC-3 (Cont'd)

(C) Optional Features (Cont'd)

(3) Central Office Multiplexing (Cont'd)

(b) Central Office Multiplexing Ports

- Per Port

(1) DS-1 Port

		Monthly Rate			Nonrecurring Charges		
	USOC	1 year	3 year	5 year	1 year	3 year	5 year
Initial Order:	PYVP1/PYVP+	$60	$60	$60	$300	$150	$ 0
Modification:	NRMBA/NRMB+	$60	$60	$60	$300	$150	$150

(2) DS-3 Port

		Monthly Rate			Nonrecurring Charges		
	USOC	1 year	3 year	5 year	1 year	3 year	5 year
Initial Order:	PYVP3/PYVP+	$150	$150	$150	$600	$300	$ 0
Modification:	NRMBB/NRMB+	$150	$150	$150	$600	$300	$300

* Effective, January 11, 2002, BCS will no longer be available to customers. Grandfathered BCS Customers will maintain their existing service arrangement until their contract expires unless they choose to convert to another service. No changes to existing BCS service arrangements will be permitted, nor will any renewals be allowed. (N) (N)

(This page filed under Transmittal No. 7)

20. Broadband Circuit Service* (Cont'd) (C)

20.3 Rates and Charges (Cont'd)

20.3.1 OC-3 (Cont'd)

(D) Service-to-Service Through Connect Arrangement (OC-3)

	Monthly Rate			Nonrecurring Charges		
USOC	1 year	3 year	5 year	1 year	3 year	5 year
THA	$0	$0	$0	$300	$300	$300

(E) Moves (OC-3)

(1) Service Facility Move

	Monthly Rate			Nonrecurring Charges		
USOC	1 year	3 year	5 year	1 year	3 year	5 year
NRMBS	$0	$0	$0	$650	$650	$650

(2) Moves of Point of Termination

See Section 13, preceding for rates and charges.

(3) Moving Customer Premises

See Section 13, preceding for rates and charges.

* Effective, January 11, 2002, BCS will no longer be available to customers. Grandfathered BCS Customers will maintain their existing service arrangement until their contract expires unless they choose to convert to another service. No changes to existing BCS service arrangements will be permitted, nor will any renewals be allowed. (N)

(This page filed under Transmittal No. 7)

ACCESS SERVICE

20. Broadband Circuit Service* (Cont'd) (C)

20.3 Rates and Charges (Cont'd)

20.3.1 OC-3 (Cont'd)

(F) Collocation Transport

USOC	Monthly Rate Fixed	Monthly Rate Per Mile	Nonrecurring Charges
BCS Circuit (1H48S)			
1 Year	$1,600	$193	$3,000
3 Year	$1,400	$154	$1,500
5 Year	$1,150	$110	$ 0

(G) Interconnect Arrangement with Other Special Access Services OC-3 Cross-Connect

USOC	Monthly Rate	Nonrecurring Charges
Cross-Connect (THA)		
1 Year	$0	$300
3 Year	$0	$300
5 Year	$0	$300

* Effective, January 11, 2002, BCS will no longer be available to customers. Grandfathered BCS Customers will maintain their existing service arrangement until their contract expires unless they choose to convert to another service. No changes to existing BCS service arrangements will be permitted, nor will any renewals be allowed. (N) (N)

(This page filed under Transmittal No. 7)

20. Broadband Circuit Service* (Cont'd) (C)

20.3 Rates and Charges

20.3.2 OC-12

(A) Channel Termination

– per BCS Circuit, per Customer Premises

Volume Option	USOC	Monthly Rate 1 year	Monthly Rate 3 year	Monthly Rate 5 year	Nonrecurring Charges 1 year	Nonrecurring Charges 3 year	Nonrecurring Charges 5 year
	T6XBX/T6XB+	$9,900	$8,460	$5,445	$5,000	$2,500	$0
2 plus	T6XEX/T6XE+	n/a	$7,610	$4,320	n/a	$2,500	$0

* Effective, January 11, 2002, BCS will no longer be available to customers. Grandfathered BCS Customers will maintain their existing service arrangement until their contract expires unless they choose to convert to another service. No changes to existing BCS service arrangements will be permitted, nor will any renewals be allowed. (N) | (N)

(This page filed under Transmittal No. 7)

20. Broadband Circuit Service* (Cont'd)) (C)

20.3 Rates and Charges (Cont'd)

20.3.2 OC-12 (Cont'd)

(B) Mileage

– per BCS Circuit

(1) Fixed

USOC	Monthly Rate 1 year	Monthly Rate 3 year	Monthly Rate 5 year	Nonrecurring Charges 1 year	Nonrecurring Charges 3 year	Nonrecurring Charges 5 year
1HYBS/1HYB+	$7,100	$6,500	$5,800	$0	$0	$0

(2) Per Mile

USOC	Monthly Rate 1 year	Monthly Rate 3 year	Monthly Rate 5 year	Nonrecurring Charges 1 year	Nonrecurring Charges 3 year	Nonrecurring Charges 5 year
1HYBS/1HYB+	$330	$275	$200	$0	$0	$0

* Effective, January 11, 2002, BCS will no longer be available to customers. Grandfathered BCS Customers will maintain their existing service arrangement until their contract expires unless they choose to convert to another service. No changes to existing BCS service arrangements will be permitted, nor will any renewals be allowed. (N) (N)

20. Broadband Circuit Service* (Cont'd) (C)

20.3 Rates and Charges (Cont'd)

20.3.2 OC-12 (Cont'd)

(C) Optional Features

(1) Equipment Protection

- Per Channel Termination, per Customer Premises

USOC	Monthly Rate 1 year	Monthly Rate 3 year	Monthly Rate 5 year	Nonrecurring Charges 1 year	Nonrecurring Charges 3 year	Nonrecurring Charges 5 year
APPBX/APPB+	$300	$300	$300	$360	$180	$0

(2) Loop Redundancy
Per Channel Termination, per Customer Premises

USOC	Monthly Rate 1 year	Monthly Rate 3 year	Monthly Rate 5 year	Nonrecurring Charges 1 year	Nonrecurring Charges 3 year	Nonrecurring Charges 5 year
DVDLX/DVDL+	$590	$590	$590	$720	$360	$0

* Effective, January 11, 2002, BCS will no longer be available to customers. Grandfathered BCS Customers will maintain their existing service arrangement until their contract expires unless they choose to convert to another service. No changes to existing BCS service arrangements will be permitted, nor will any renewals be allowed. (N)

20. Broadband Circuit Service* (Cont'd) (C)

20.3 Rates and Charges (Cont'd)

20.3.2 OC-12 (Cont'd)

(C) Optional Features (Cont'd)

(3) Central Office Multiplexing

(a) Central Office Multiplexing System Arrangement

- Per OC-12 System Arrangement

	Monthly Rate			Nonrecurring Charges		
USOC	1 year	3 year	5 year	1 year	3 year	5 year
MXNBX/MXNB+	$3,750	$2,500	$1,900	$1,000	$500	$0

* Effective, January 11, 2002, BCS will no longer be available to customers. Grandfathered BCS Customers will maintain their existing service arrangement until their contract expires unless they choose to convert to another service. No changes to existing BCS service arrangements will be permitted, nor will any renewals be allowed. (N)

(This page filed under Transmittal No. 7)

20. Broadband Circuit Service* (Cont'd) (C)

20.3 Rates and Charges (Cont'd)

20.3.2 OC-12 (Cont'd)

(C) Optional Features (Cont'd)

(3) Central Office Multiplexing (Cont'd)

(b) Central Office Multiplexing Ports

- Per Port

(1) DS3 Port

		Monthly Rate			Nonrecurring Charges		
	USOC	1 year	3 year	5 year	1 year	3 year	5 year
Initial Order:	PYVP3/PYVP+	$150	$150	$150	$600	$300	$ 0
Modification:	NRMBB/NRMB+	$150	$150	$150	$600	$300	$300

(2) OC-3 Port

		Monthly Rate			Nonrecurring Charges		
	USOC	1 year	3 year	5 year	1 year	3 year	5 year
Initial Order:	PYVPC/PYVP+	$180	$180	$180	$600	$300	$ 0
Modification:	NRMBD/NRMB+	$180	$180	$180	$600	$300	$300

(3) OC-3c Port

		Monthly Rate			Nonrecurring Charges		
	USOC	1 year	3 year	5 year	1 year	3 year	5 year
Initial Order:	PYVPO/PYVP+	$180	$180	$180	$600	$300	$ 0
Modification:	NRMBE/NRMB+	$180	$180	$180	$600	$300	$300

* Effective, January 11, 2002, BCS will no longer be available to customers. Grandfathered BCS Customers will maintain their existing service arrangement until their contract expires unless they choose to convert to another service. No changes to existing BCS service arrangements will be permitted, nor will any renewals be allowed. (N) (N)

20. Broadband Circuit Service* (Cont'd) (C)

20.3 Rates and Charges (Cont'd)

20.3.2 OC-12 (Cont'd)

(D) Service-to-Service Through Connect Arrangement (OC-12)

	Monthly Rate			Nonrecurring Charges		
USOC	1 year	3 year	5 year	1 year	3 year	5 year
THA	$0	$0	$0	$300	$300	$300

(E) Moves

(1) Service Facility Move (OC-12)

	Monthly Rate			Nonrecurring Charges		
USOC	1 year	3 year	5 year	1 year	3 year	5 year
NRMBS	$0	$0	$0	$650	$650	$650

(2) Moves of Point of Termination

See Section 13, preceding for rates and charges.

(3) Moving Customer Premises

See Section 13, preceding for rates and charges.

(F) STS-1 Channel Reconfiguration Charge

	Monthly Rate			Nonrecurring Charges		
USOC	1 year	3 year	5 year	1 year	3 year	5 year
NRMBF	$0	$0	$0	$600	$600	$600

* Effective, January 11, 2002, BCS will no longer be available to customers. Grandfathered BCS Customers will maintain their existing service arrangement until their contract expires unless they choose to convert to another service. No changes to existing BCS service arrangements will be permitted, nor will any renewals be allowed. (N) (N)

(This page filed under Transmittal No. 7)

20. Broadband Circuit Service* (Cont'd) (C)

20.3 Rates and Charges (Cont'd)

20.3.2 OC-12 (Cont'd)

(G) Collocation Transport

	USOC	Monthly Rate Fixed	Monthly Rate Per Mile	Nonrecurring Charges
BCS Circuit (1H48S)				
1 Year		$7,100	$330	$5,000
3 Year		$6,500	$275	$2,500
5 Year		$5,800	$200	$ 0

(H) Interconnect Arrangement with Other Special Access Services OC-12 Cross-Connect

	USOC	Monthly Rate	Nonrecurring Charge
Cross-Connect	(THA)		
1 Year		$0	$300
3 Year		$0	$300
5 Year		$0	$300

* Effective, January 11, 2002, BCS will no longer be available to customers. Grandfathered BCS Customers will maintain their existing service arrangement until their contract expires unless they choose to convert to another service. No changes to existing BCS service arrangements will be permitted, nor will any renewals be allowed. (N) (N)

(This page filed under Transmittal No. 7)

ACCESS SERVICE

		Page No.	
21.	Optical Carrier Network (OCN) Point-to-Point Service	21-1	
21.1	General Description	21-2	
21.2	Rate Regulations	21-5	
21.3	Rates and Charges	21-21	
A.	OC-3/OC-3c	21-21	
B.	OC-12/OC-12c	21-24	
C.	OC-48/OC-48c	21-37	
D.	OC-192	21-29.1	(N)
E.	Installation and Rearrangement Charges	21-30	(N)

(This page filed under Transmittal No. 29)

21. Optical Carrier Network (OCN) Point-to-Point Service

21.1 General Description

OCN Point-to-Point service will be designed to provide the customer with a custom point to point linear network. The Optical Point-to-Point service will offer a highly reliable transport service that is designed to connect customer locations and SBC wire centers in a linear (point to point) configuration. Large volumes of information can be transported between two locations in a dedicated, high-bandwidth optical path. Specifically, the OCN Point-to-Point services can handle voice, data, video, imaging, Internet traffic and other advanced broadband applications.

Rates and charges for Optical Carrier Network (OCN) Point-to-Point Service are set forth in Section 21.3 following, with the exception of the services provided by the Telephone Company in the Metropolitan Statistical Areas (MSAs) in which the Telephone Company has received Phase II pricing flexibility pursuant to Subpart H of Part 69 of the Commission's Rules. The rates and charges for the Optical Carrier Network (OCN) Point-to-Point Service in the MSAs that have received Phase II pricing flexibility are set forth in Section 22. (N)

OCN Point-to-Point channels provide high speed synchronous optical fiber-based full duplex data transmission capabilities between two points. These services provide optical data transmission with the following characteristics:

- OC-3/OC-3c provides channels operating at the terminating bit rate of 155.52 Mbps;

- OC-12/OC-12c provides channels operating at the terminating bit rate of 622.08 Mbps;

- OC-48/OC-48c provides channels operating at the terminating bit rate of 2488.32 Mbps;

- OC-192 provides channels operating at the terminating bit rate of 9953.28 Mbps;

OC-3, OC-12, OC-48 and OC-192 channels may be used to connect:

- a customer designated premises to another customer designated premises, without the add/drop multiplexing capability.

- a customer designated premises to a Telephone Company location where add/drop multiplexing and add/drop functions are performed.

Optical Transmission paths for OC-3/OC-3c, OC-12/OC-12c, OC-48/OC-48c and OC-192 differentiated by bit rate and the quality of transmission is as delineated by the Optical Interface definitions in the appropriate technical reference publication(s) for the service ordered.

(This page filed under Transmittal No. 43)

21. Optical Carrier Network (OCN) Point-to-Point Service (Cont'd)

21.1 General Description (Cont'd)

OC-3, OC-12, and OC-48 may be connected by (1) using the appropriate OC-3, OC-12 or OC-48 add/drop multiplexer (mux) along with the add/drop function to a DS1 and/or DS3 at suitably equipped wire centers, or (2), by using the full bandwidth premises to premises.

Where appropriate facilities are not immediately available, negotiated intervals or special construction charges may apply. The customer is responsible via the ordering process to identify what STS signal configuration is to be contained in each OC-3/OC-3c, OC-12/OC-12c, OC-48/OC-48c and OC-192 service connection and each STS-1, STS-3 and/or STS-12 payload content. This information is needed for routing and connection purposes in the network. OCN does not extend the SONET data communication channel overhead across the network interface to the customer's equipment. (N)

OC-3, OC-12, OC-48 and OC-192 based on customer requirements can be configured in any of the following ways: (N)

(A) OC-3

(1) three STS-1 (Synchronous Transport Signals) channels which each contain:

- one DS3 that is STS-1 mapped; or
- up to 28 asynchronous DS1s that are VT-mapped; or
- an STS-1 channel without constraint to payload mapping when the STS-1 channel does not terminate via an add/drop function to DS1 or DS3 services within the network;

(2) a single concatenated STS-3C channel.

(B) OC-12

(1) twelve STS-1 channels which each contain:

- one DS3 that is STS-1 mapped; or
- up to 28 asynchronous DS1s that are VT-mapped; or
- an STS-1 channel without constraint to payload mapping when the STS-1 channel does not terminate via an add/drop function to DS1 or DS3 services within the network;

(This page filed under Transmittal No. 29)

21. Optical Carrier Network (OCN) Point-to-Point Service (Cont'd) (N)

21.1 General Description (Cont'd)

(B) OC12 (Cont'd)

(2) four concatenated STS-3C channels.

(3) from one to three STS-3Cs channels mixed with from three to nine STS-1 channels subject to utilization of the total OC-12 capacity.

(4) a single concatenated STS-12C channel.

(C) OC-48

(1) forty-eight STS-1 channels which each contain:

- one DS3 that is STS-1 mapped; or
- up to 28 asynchronous DS1s that are VT-mapped; or
- an STS-1 channel without constraint to payload mapping when the STS-1 channel does not terminate via an add/drop function to DS1 or DS3 services within the network;

(2) sixteen concatenated STS-3C channels.

(3) from one to fifteen concatenated STS-3C channels, mixed with from three to forty-five STS-1 channels subject to utilization of the total OC-48 capacity.

(4) four concatenated STS-12Cs channels.

(5) from one to three concatenated STS-12C channels, mixed with from twelve to thirty-six STS-1 channels subject to utilization of the total OC-48 capacity.

(6) from one to three concatenated STS-12C channels, mixed with from four to twelve concatenated STS-3C channels, also mixed with from three to thirty-three STS-1 channels subject to utilization of the total OC-48 capacity.

(7) from one to three concatenated STS-12C channels, mixed with from one to eleven concatenated STS-3C channels, also mixed with from three to thirty-three STS-1 channels, subject to utilization of the total OC-48 capacity. (N)

21. Optical Carrier Network (OCN) Point-to-Point Service (Cont'd) (N)

21.1 General Description (Cont'd)

(D) OC-192

(1) One hundred ninety two interleaved STS-1 Channels which each contain:

- One DS3 that is STS-1 mapped; or
- Up to 28 asynchronous DS1s that are VT-mapped; or
- An STS-1 channel without constraint to payload mapping when the STS-1 channel does not terminate via and Add/Drop Function to DS1 or DS3 services within the network;

(2) Sixty four interleaved concatenated STS-3 channels.

(3) From one to sixty three interleaved concatenated STS-3c channels, mixed with from three to one hundred eighty nine STS-1 channels, subject to utilization of the total STS-192 capacity.

(4) Sixteen interleaved concatenated STS-12c channels.

(5) From one to fifteen interleaved concatenated STS-12c channels mixed with from twelve to one hundred eighty STS-1 channels, subject utilization of the total STS-192 capacity.

(6) From one to fifteen interleaved concatenated STS-12c channels, mixed with from four to sixty concatenated STS-3c channels subject to utilization of the total STS-192 capacity.

(7) From one to fifteen interleaved concatenated STS-12c channels, mixed from one to fifty nine concatenated STS-3c channels, also mixed with from three to one hundred seventy seven STS-1 channels, subject to utilization of the total STS-192 capacity.

(8) Four interleaved concatenated STS-48c channels. (N)

21. Optical Carrier Network (OCN) Point-to-Point Service (Cont'd) (N)

21.1 General Description (Cont'd)

(D) OC-192 (Cont'd)

(9) From one to three interleaved concatenated STS-48c channels, mixed with from forty eight to one hundred forty four STS-1 Channels, subject to utilization of the total STS-192 capacity.

(10) From one to three interleaved concatenated STS-48c channels, mixed with from sixteen to forty eight STS-3c channels, subject to utilization of the total STS-192 capacity.

(11) From one to three interleaved concatenated STS-48c channels, mixed with from four to twelve STS-12c channels, subject to utilization of the total STS-192 capacity.

(12) From one to three interleaved concatenated STS-48c channels, mixed with from one to forty seven concatenated STS-3c channels, also mixed with from three to one hundred forty one STS-1 channels, subject to utilization of the total STS-192 capacity.

(13) From one to three interleaved concatenated STS-48c channels, mixed with from one to eleven concatenated STS-12c channels, also mixed with from twelve to one hundred thirty two STS-1 channels, subject to utilization of the total STS-192 capacity.

(14) From one to three interleaved concatenated STS-48 channels, mixed with from one to eleven concatenated STS-12c channels, also mixed with from four to forty four concatenated STS-3c channels, subject to utilization of the total STS-192 capacity.

(15) From one to three interleaved concatenated STS-48 channels, mixed with from one to eleven concatenated STS-12c channels, also mixed with from three to one hundred twenty nine STS-1 channels, subject to utilization for the total STS-192 capacity. (N)

21. Optical Carrier Network (OCN) Point-to-Point Service (Cont'd)

21.2 Rate Regulations

This section contains the specific regulations governing the rates and charges which may apply to OCN Point-to-Point Service. The rates and charges in effect at the time the OCN Point-to-Point Service is installed and accepted by the customer are the rates and charges which will be billed to the customer requesting the service. The rates and charges in effect at the time may not be the same as those rates and charges in effect at the time the customer requests the service.

If the Telephone Company initiates rate changes resulting in a decrease of rates for an existing OC-3, OC-12 or OC-48 service (T)
with a 1, 3, or 5 year billing period, or for an existing OC-192 (N)
service with a 3 or 5 year billing period, those rate changes (N)
will be passed along to the customer. Rate changes resulting in an increase of rates for an existing OC-3, OC-12 or OC-48 service (T)
with a 1, 3, or 5 year billing period, or for an existing OC-192 (N)
service with a 3 or 5 year billing period will not exceed the (N)
original rate for that selected billing period. Rate changes may occur as a result of F.C.C. action.

The four basic rate categories for OCN Point-to-Point Service are Local Distribution Channel, Interoffice Transport, Collocation Transport and Optional Features and Functions.

(A) Local Distribution Channel (LDC)

The Local Distribution Channel (LDC) (same as Channel Termination (CT)) rate category provides for the communications path between a customer designated premise and the serving wire center of that premise. LDCs are only offered without SBC provided and maintained terminal ADM equipment at the customers designated premises and will hand-off basic 2-fiber or 4-fiber optic cables, depending upon the optional feature (as ordered). One LDC is applied per customer designated premises at which the channel is terminated even if collocation exists.

OC-3/OC-3c, OC-12/OC-12c, OC-48/OC-48c and OC-192 LDCs provide (N)
point-to-point optical interconnection between the Telephone Company Serving Wire Center (SWC) and the customer premises.

The customer is required to provide ADM that is compatible with the Telephone Company central office ADM as is described in Technical Publication GR-253-CORE.

All LDCs comprising a channel must have the same terminating bit rate unless multiplexing is performed at a Telephone Company Hub location.

(This page filed under Transmittal No. 29)

21. Optical Carrier Network (OCN) Point-to-Point Service (Cont'd)

21.2 Rate Regulations (Cont'd)

(B) Interoffice Transport

Interoffice Transport facilities comprised of Fixed and Per Mile rate elements, provide the transmission paths between Serving Wire Centers associated with two customer designated premises or between a Serving Wire Center associated with a customer premises and a Telephone Company Hub location. Four interoffice transport types are available.

OC-3/OC-3c LDCs are interconnected to OC-3/OC-3c transport.
OC-12/OC-12c LDCs are interconnected to OC-12/OC-12c transport.
OC-48/OC-48c LDCs are interconnected to OC-48/OC-48c transport.
OC-192 LDCs are interconnected to OC-192 transport. (N)

In addition, interoffice transport can be connected between wire centers with Add/Drop multiplexing at a lower OC-N speed than the LDCs, if the transport is between a lower speed Add/Drop Function and:

- another lower speed Add/Drop Function;
- another lower speed Local Distribution Channel;
- a lower speed Dedicated Ring Port;

All of the above terminations must be the same speed as the transport.

(C) Collocation Transport

Collocation Transport provides for the transmission facilities arrangement between a Telephone Company central office frame and a collocation frame located in the Telephone Company Central Office.

There are two components of Collocation Transport.

(1) Inter/Intra Office Fixed

Inter/Intra office fixed rate element provides for the electronic equipment required to terminate a channel between two collocation arrangements located either in the same central office (intra) or in two separate central offices (inter).

(2) Inter Office Per Mile

The Per Mile charge provides for the electronic equipment and facilities necessary to provide the interoffice transport between two collocation arrangements.

(This page filed under Transmittal No. 29)

21. Optical Carrier Network (OCN) Point-to-Point Service (Cont'd)

21.2 Rate Regulations (Cont'd)

(C) Collocation Transport (Cont'd)

The following types of collocation transport are:

OC-3/OC-3c
OC-12/OC-12c
OC-48/OC-48c
OC-192

In addition to the collocation transport charge, one EISCC charge, of the same speed, from Section 18.8.2 will apply per collocation arrangement.

(D) Optional Features and Functions

The following optional features and functions are available:

Central Office Features which consist of:
- Add/drop Multiplexing (ADM)
- Add/drop function (ADM function)

OC-N Network Survivability which consist of:
- 1+1 Protection (D)
- 1+1 Protection with Cable Survivability
- 1+1 Protection with Route Survivability (D)

Regenerators which consist of:
- OC-48
- OC-192

Major Optional Features and Functions, which consist of:
- Connection Arrangements
  - Shared Network Arrangement

(1) Add/Drop Multiplexing

Add/Drop multiplexing is an arrangement in a Telephone Company central office that allows non-concatenated OC-3, OC-12, OC-48 or OC-192 channels operating at a terminating speed of 155.52 Mbps, 622.08 Mbps, 2488.32 Mbps or 9953.28 Mbps, respectively, to add/drop a lower speed channel by using this feature along with the add/drop function as stated in (2) following. The mix of multiplexing signals cannot exceed the maximum bandwidth of the higher speed OCN circuit terminating on the Central Office multiplexer.

21. Optical Carrier Network (OCN) Point-to-Point Service (Cont'd)

21.2 Rate Regulations (Cont'd)

(D) Optional Features and Functions (Cont'd)

(1) Add/Drop Multiplexing (Cont'd)

For example, OC-3 add/drop multiplexing at a Telephone Company wire center will provide the capability to support the full add/drop function capacity of OC-3 Service bandwidth with up to 3 DS3 add/drop functions or equivalently up to 3 groups of 28 DS1 add/drop functions.

At the time of ordering any of the following basic rate categories, the customer must provide configuration information for the entire multiplexing option at the time the order for service is placed. In addition, concatenated services OC-3, OC-12 or OC-48 cannot be ordered under the central office feature section as the Telephone Company cannot convert individual STS-1 signals to concatenated (non-channelized) channels.

OC-12 add/drop multiplexing at a Telephone Company wire center will provide the capability to support the full add/drop function capacity of OC-12 service bandwidth with up to 4 OC-3 add/drop functions or up to twelve DS3 add/drop functions or equivalent combinations of OC-3 and DS3 add/drop functions.

If asynchronous DS1 ports are required on a OC-12 OCN circuit, then the OC-3 add/drop multiplexing feature and associated DS1 add/drop function must be ordered in addition to the OC-12 add/drop multiplexing feature.

OC-48 add/drop multiplexing at a Telephone Company wire center will provide the capability to support the full add/drop function capacity of OC-48 service bandwidth with up to 4 OC-12 add/drop functions or up to forty-eight DS3 add/drop functions or equivalent combination of OC-3 and DS3 add/drop functions. If DS1's are required for the OC-12 then the preceding guidelines established can be followed. (C)

OC-192 add/drop multiplexing at a Telephone Company wire center will provide the capability to support full add/drop function capacity of OC-192 service bandwidth. Up to four OC-48 add/drop functions, or up to 16 OC-12 add/drop functions, or up to 64 OC-3 add/drop functions or equivalent combinations of OC-48, OC-12 and OC-3 add/drop functions are supported. (N) (N)

(This page filed under Transmittal No. 29)

21. Optical Carrier Network (OCN) Point-to-Point Service (Cont'd)

21.2 Rate Regulations (Cont'd)

(D) Optional Features and Functions (Cont'd)

(2) Add/Drop Function

The OC-3, OC-12, OC-48 and OC-192 are able to add or drop lower level signals as shown in the matrix following. The add/drop function is offered at a circuit level. For example, if a customer wants to drop one DS3 signal from an OC-12 service, they would pay one add/drop function charge for the DS3 and the initial OC-12 add/drop multiplexing charge. (N)

An OC-3, OC-12, OC-48 and OC-192 is only able to add or drop the services that have been identified by payload content (mapping) within the bandwidth. DS1 mapped STS-1 signals are only able to connect to a DS1, and a DS3 mapped STS-1 signals are only able to connect to a DS3. If a change is required it may be accomplished by the customer's CPE or through the current asynchronous environment for multiplexing of DS3 and DS1 services stated in Section 7.11. (N)

Once the options in (1) and (2) above are specified by the customer they cannot be used with OC-3, OC-12 or OC-48 configured by the customer to contain a single non-channelized (concatenated) STS-3C or STS-12C signal, respectively.

ADD/DROP Function					
	DS1	DS3	OC-3	OC-12	OC-48
OC-192	No	No	Yes	Yes	Yes
OC-48	No	Yes	Yes	Yes	N/A
OC-12	No	Yes	Yes	N/A	N/A
OC-3	Yes	Yes	N/A	N/A	N/A

(N)

(This page filed under Transmittal No. 29)

21. Optical Carrier Network (OCN) Point-to-Point Service (Cont'd)

21.2 Rate Regulations (Cont'd)

(D) Optional Features and Functions (Cont'd)

(3) OCN Point-to-Point Network Survivability (D)

There are 3 components of OCN Network Survivability:

(a) 1+1 Protection
(b) 1+1 Protection with Cable Survivability
(c) 1+1 Protection with Route Survivability

(a) 1+1 Protection

This option provides two identical fiber pairs that are placed in the same cable and follows the same route. If the working pair fails, traffic shifts to the protected fiber pair. This option does not protect against a fiber cable cut.

The protected OC-3/OC-3c, OC-12/OC-12c, OC-48/OC-48c and OC-192 Services are offered with four fibers in the same cable and the protection card is activated when this option is ordered. (N)

(b) 1+1 Protection with Cable Survivability
With this option, the working fiber pairs and the protected fiber pairs are located in two separate cables within the same conduit. If the working fiber pair cable experiences damages or a fiber cut, traffic will switch to the protected fiber pair in a separate cable. These cables are located in the same conduit, if the conduit is cut, there is no protection.

This option will provide 1+1 protection and additional loop survivability with the working fiber pair and protect fiber pair placed in separate cables within the same conduit.

(c) 1+1 Protection with Route Survivability

This option will provide 1+1 protection and offer additional protection from fiber cable cuts by routing the working fiber pair via the primary route and the protected fiber pair via a physically diverse alternate route.

(D)
(D)

(This page filed under Transmittal No. 47)

ACCESS SERVICE

21. Optical Carrier Network (OCN) Point-to-Point Service (Cont'd)

21.2 Rate Regulations (Cont'd)

(D) Optional Features and Functions (Cont'd)

(3) OCN Point-to-Point Network Survivability[1] (Cont'd) (N)

(c) 1+1 Protection with Route Survivability (Cont'd)

The protected fiber will be charged on a distance sensitive basis, in addition to the protection optical charge and will be based on quarter route miles, from the customer premises to the serving wire center.

This is the only option that will assure 100 percent availability of the service. Any service interruption will result in a credit equal to one month's bill for the circuit involved. If the interruption occurs on a Local Distribution Channel without this option, normal terms and conditions for out of service credits as stated in 2.4.4 preceding will apply. An interruption period will start when an inoperative service is reported to the Telephone Company and end when the service is operative. In any month, as a result of an interruption, the total credit per rate element of the interrupted service may not exceed 100 percent of the monthly charge for that particular rate element.

All other terms and conditions for Credit Allowances as stated in 2.4.4 preceding, will apply.

Prior to confirming an order for service, the Telephone Company will provide a proposed route diagram to the customer. The diagram will include the number of quarter route miles and method used to support the number needed to provide the alternate route. In order to avoid compromising Route Survivability information, the Telephone Company will provide this information only to the ordering customer.

Installation of the 1+1 protection with Route Survivability option will not begin until the customer has accepted the proposed routing by the Telephone Company.

[1]OCN Point-to-Point Network Survivability is available on OC-3/OC-3c, (N)
OC-12/OC-12c and OC-48/OC-48c Services only. (N)

(This page filed under Transmittal No. 29)

21. Optical Carrier Network (OCN) Point-to-Point Service (Cont'd)

21.2 Rate Regulations (Cont'd)

(D) Optional Features and Functions (Cont'd)

(3) OCN Point-to-Point Network Survivability[1] (Cont'd) (N)

The following diagrams provide an example of (a), (b) and (c) above:

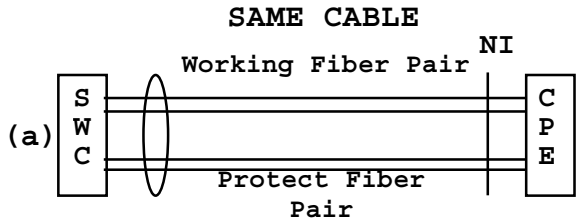

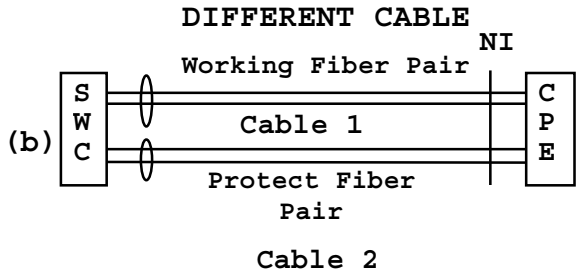

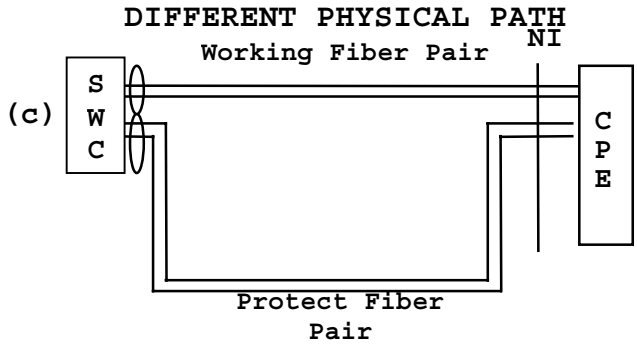

[1]OCN Point-to-Point Network Survivability is available on OC-3/OC-3c, (N)
OC-12/OC-12c and OC-48/OC-48c Services only. (N)

(This page filed under Transmittal No. 29)

21. Optical Carrier Network (OCN) Point-to-Point Service (Cont'd)

21.2 Rate Regulations (Cont'd)

(D) Optional Features and Functions (Cont'd)

(4) Point-to-Point OC-48 and OC-192 Regenerator (N)

Regenerators provide essential detection and retransmission of SONET Optical 2488.32 Mbps and 9953.28 Mbps signals (N) between customer premises. Regenerators will only be provided as required by the Telephone Company when actual fiber facility distances between customer designated premises and/or central office locations exceed design limits (typically 25 to 30 miles). Regenerators will be located exclusively in Telephone Company central offices.

(5) Connection Arrangement

(a) Shared Network Arrangement

- A Shared Network Arrangement is a service offering that enables a customer ("Service User") to connect subtending services to the multiplexed OC-3, OC-12 or OC-48 service of another customer (the "Host Subscriber"), with the Telephone Company maintaining separate billing for each. Each customer will be billed for those rate elements associated with their own portion of the service configuration. Under no circumstances will the rates or charges for individual rate elements be split. This offering is limited to service configurations where a Service User obtains either subtending DS3 or DS1 from a Host's multiplexed OC-3 service or an OC-3 service from a Host's multiplexed OC-12 service or an OC-12 service from a Hosts' multiplexed OC-48 service.

- Under the Shared Network Arrangement, the Telephone Company may share record information with the Host subscriber pertaining to the services of other users of the shared network. Such disclosure will be under the sole discretion of the Telephone Company and is necessary to perform billing reconciliation and/or other functions required in connection with maintaining account records.

- A nonrecurring charge, only, will apply to the Shared Network Arrangement.

(6) Network Channel Interfaces

The network channel interfaces define the bit rates that are available for OC-3/OC-3c, OC-12/OC-12c, OC-48/OC-48c and OC-192 services operating at speeds of 155.52 Mbps, (N) 622.08 Mbps, 2488.32 Mbps and 9953.28 Mbps. Network (N) Channel interfaces and codes are described in 15.3, preceding.

(This page filed under Transmittal No. 29)

21. Optical Carrier Network (OCN) Point-to-Point Service (Cont'd)

21.2 Rate Regulations (Cont'd)

(E) Monthly Extension Rates

At the expiration of the TPP term and if the customer wishes to continue OC-3/OC-3c, OC-12/OC-12c, OC-48/OC-48c or OC-192, the customer may select a new TPP at the prevailing TPP rate. (N)

If a customer does not wish to renew the TPP at the expiration of the term, the Monthly Extension Rates will apply until the customer cancels or renews the service with a new TPP term. Monthly Extension Rates are not available as an individual TPP and are to be used as a default applied at the end of a regular 1 year (12 month), 3 year (36 month) and 5 year (60 month) TPP.

(F) Nonrecurring Charges

One-time charges that apply for a specific work activity, e.g., installation, rearrangements, moves, etc., as described in Section 7.2.2.

(G) Minimum Periods

The Minimum Period for OC-3, OC-12 and OC-48 OCN Point-to-Point Service is one year and the minimum period for OC-192 OCN Point-to-Point Service is three years. In the event OCN Point-to-Point Service is terminated prior to completion of the minimum period, termination liabilities as described in 21.2(I) will apply. (T) (N) (N)

21. Optical Carrier Network (OCN) Point-to-Point Service (Cont'd)

21.2 Rate Regulations (Cont'd)

(H) Term Pricing Plans (TPP)

(1) General Description

Term Pricing Plans (TPP) are available on Local Distribution Channels, Interoffice Transport, Collocation Transport and Add/Drop Multiplexing rate elements. The TPP stabilizes rates for OCN Point-to-Point Service for the specified period of time. The following TPPs are available:

- One Year (12 Month) TPP - OC-3, OC-12 and OC-48, (T)
- Three Year (36 Month) TPP - OC-3, OC-12, OC-48 and (T)
  OC-192, or (N)
- Five Year (60 Month) TPP - OC-3, OC-12, OC-48 and (T)
  OC-192. (N)

(2) Modifications

When additional like-speed OCN Point-to-Point Service circuits are purchased, the customer may include the additional circuits in an existing TPP if:

- The customer renegotiates their TPP for a period of time equal to or greater than the time remaining on the existing TPP;
- The circuits are the same speed; and
- The circuits are located between the same customer designated premises.

(3) Renewals

At the end of a TPP period, the customer must select one of the following options within one month prior to the expiration date:

a. Renew the service for a one, three or five year TPP as provided in this tariff;
b. Elect to disconnect the service upon expiration of the billing period; or
c. Continue the service on a monthly basis at the current monthly extension rates.

All services under an existing TPP that are not renewed within the period stated above will revert to Option (3)c above and be billed at the current monthly extension rates.

(This page filed under Transmittal No. 29)

21. Optical Carrier Network (OCN) Point-to-Point Service (Cont'd)

21.2 Rate Regulations (Cont'd)

(H) Term Pricing Plans (TPP) (Cont'd)

(4) Conversions

If there is at least one month remaining on an existing 1 or 3 year OCN Point-to-Point TPP, the customer may convert the service to a higher term OCN Point-to-Point TPP without termination liability and, at the time of the access order to convert, retain the service for the period remaining on the higher term OCN Point-to-Point TPP. No retroactive OCN Point-to-Point TPP discounts will apply prior to the order date.

For example; a customer with an existing 3 Year OCN Point-to-Point TPP with 11 months remaining elects to convert to a 5 Year OCN Point-to-Point TPP. At the time of the order, the customer will begin paying the 5 year OCN Point-to-Point TPP rate for the remaining period of 2 years and 11 months (35 months) on the new TPP.

(5) Transitioning from Other Special Access Services to OCN Point-to-Point

The customer may, at any time, move other existing (C)
Telephone Company Special Access Services to an OCN (D)
Point-to-Point service provided the following conditions (C)
are met for the new OCN Point-to-Point circuit being (C)
ordered. (C)
(D)

(D)

21. Optical Carrier Network (OCN) Point-to-Point Service (Cont'd) (N)

21.2 Rate Regulations (Cont'd)

(H) Term Pricing Plans (TPP) (Cont'd)

(5) Transitioning from Other Special Access Services to OCN Point-to-Point (Cont'd)

The new OCN Point-to-Point circuit must:

(a) Be the same speed and configuration as the existing service being disconnected.

(b) Be located between the same two customer designated premises or between the same customer designated premises and the Serving Wire Center.

(c) Have a minimum billing period that is greater or equal to the remaining billing period revenue for the existing service. (For example, a customer wishes to convert from Broadband Circuit Service (BCS) with 6 months remaining on a 36-month Term Pricing Plan (TPP), Minimum Billing Period of 12 months for the new service must be ordered.)

(d) Represent equal or greater of the total minimum billing period revenue as the remaining billing period revenue of the existing service. (For example, a customer wishes to convert from Broadband Circuit Service with 36 months remaining on a 60-month TPP. The existing service's monthly bill is $8,100 per month with 36 months remaining. The remaining billing period revenue equals (8,100 x 36 or $291,600). The new service minimum billing period revenue must be equal to or greater than $291,600 in this example over the life of the new contract. (N)

21. Optical Carrier Network (OCN) Point-to-Point Service (Cont'd)

21.2 Rate Regulations (Cont'd)

(I) Termination Liability

Customer requesting termination of service prior to the expiration date of the OCN Point-to-Point TPP will be liable for a termination charge. The termination charge for all TPP terms with an Optical Interface, will be calculated as follows:

Billing Period	Termination Percentage	
1, 3, or 5 years	50%	(C)

The termination liability is calculated as follows:

(Monthly recurring rate) **X** Months remaining in billing) **X** (Termination percentage)

Example:

An OCN Point-to-Point customer with a $20,000 monthly rate terminates service after 2 years with 1 year (12 months) remaining in a 3 year TPP. The termination liability would be calculated as:

$20,000 x 12 x .50 = $120,000 Termination Liability

A termination charge will not apply under the following conditions and circumstances:

1. Moves as set forth under "Moves" without decreasing number of OCN PTP circuits
2. Modifications of services as described in the tariff
3. Conversions to other special access service if
   a. service is same or higher
   b. billing period same or greater
   c. billing period revenue for the special access service is greater than or equal to the OCN PTP billing period revenue.

(J) Moves

Moves involve a change in the physical location of one of the following:

- Service rearrangement;
- Point of Termination with in the same customer premises; or
- Customer's premises.

Move charges are dependent upon the type of move requested by the customer.

21. Optical Carrier Network (OCN) Point-to-Point Service (Cont'd) (N)

21.2 Rate Regulations (Cont'd)

(J) Moves (Cont'd)

(1) Service Rearrangement

Service Rearrangements are changes to existing (installed) services which do not result in either (1) a change in the minimum period requirements or (2) a change in the physical location of the point of termination at a customer designated premises as described in Section 7.2.2.

(2) Moves of the Point of Termination Within the Same Customer Premises

When the move of the Point of Termination is to a new location within the same customer premises, the move will be treated as an extension of access service facilities as described in Section 7.2.3.

(3) Moves of a Customer Premises

Moves to a different customer premises will be treated as a discontinuance and start of service as described in Section 7.2.3.

(K) Mileage Measurement

The application of distance sensitive rates requires the determination of the airline distance between a serving wire Center (SWC) and an end office or two or more serving wire center (SWC) locations as described in Section 7.2.5.

(L) Modification of Access Service

The customer may request a modification of an access order at any time prior to notification by the Telephone Company that service is available for the customer's use. The Telephone Company will make every effort to accommodate a requested modification when it is able to do so with the normal work force assigned to complete such an order within normal business hours. If the modification cannot be made with the normal work force during normal business hours, the Telephone Company will notify the customer. If the customer still desires the access order modification, the Telephone Company will schedule a new service date. All charges for access order modifications will apply on a per order, per occurrence basis as described in Section 5.2.2. (N)

21. Optical Carrier Network (OCN) Point-to-Point Service (Cont'd)

21.2 Rate Regulations (Cont'd)

(M) Shared Use

Shared use occurs when Special Access Service and Switched Access Service are provided over the same Wideband Analog or DS1 or DS3 facilities or SONET based services through a common interface. The facility will be ordered, provided and rated as Special Access Service (e.g., Local Distribution Channel, DS3 Service Packages, DS3 Service Channels, Channel Mileage Terminations and Channel Mileage, as appropriate, and Multiplexing).

The nonrecurring charge that applies when the Shared Use Facility is installed will be the nonrecurring charge associated with the installation of the appropriate Special Access Wideband Analog or DS1 or DS3 facility or SONET based service. Individual service (i.e., Switched or Special Access) nonrecurring charges will not apply to the individual channels of the Shared Use Facility. Rating as Special Access will continue until such time as the customer chooses to use a portion of the available capacity for providing Switched Access Transport Service from the office where multiplexing occurs to either an end office or an access tandem.

(N) Jointly Provided Service

Jointly Provided Service is also referred to as "meet-point-billing" arrangements as described in Section 2.4.8.

(O) Ordering Options and Conditions

The ordering options and conditions sets forth the regulations and order related charges for ordering Access Service as described in Section 5.

(P) Upgrade to OCN Point-to-Point from lower speeds

Customers with one, three or five year OCN Point-to-Point TPPs (or existing Broadband Circuit Service Term Pricing Plans as shown in Section 20 preceding), may at any time upgrade to OCN Point-to-Point service (e.g., OC-12 to OC-48) without incurring the Termination Liability charge, providing the following criteria are met: (N) (N)

- The customer subscribes to a Term Pricing Plan period that is equal to, or greater than 12 months;
- The expiration date for the new Term Pricing Plan period is beyond the end of the original Term Pricing Plan period;

21. Optical Carrier Network (OCN) Point-to-Point Service (Cont'd)

21.2 Rate Regulations (Cont'd)

(P) Upgrade to OCN Point-to-Point from lower speeds (Cont'd)

- No lapse in service occurs;
- 100% of any waived or unamortized nonrecurring charges will apply, when applicable;
- The monthly rates for the new service(s) will be those rates in effect at the time the new service(s) is/are installed;
- The new service is provided between the same customer locations and with the same customer of record as the disconnected service;
- The billed monthly recurring revenue for the new service is equal to or greater than the billed monthly recurring revenue remaining in the service being converted; and

(D)

(D)

21. Optical Carrier Network (OCN) Point-to-Point Service (Cont'd)

21.3 Rates and Charges

(A) OC-3/OC-3c

(1) Local Distribution Channel

-Per Point of Termination

USOC	1 Year	3 year	5 year	Mo. Ext.
TMECS	$2,100.00	$1,700.00	$1,300.00	$2,275.00

(2) Interoffice Transport

-Mileage	USOC	1 Year	3 year	5 year	Mo. Ext.
-Fixed	1L5XX	$1,100.00	$975.00	$900.00(I)	$1,550.00
-Per Mile	1L5XX	$260.00	$260.00	$220.00	$350.00

(3) Collocation Transport—Transport Facilities between Collocation Arrangements

	USOC	1 Year	3 year	5 year	Mo. Ext.
-Fixed	1H48S	$1,100.00(R)	$975.00(R)	$886.00(R)	$1,550.00(R)
-Per Mile	1H48S	$260.00	$260.00	$220.00	$350.00

(4) Optional Features and Functions

(a) OC-3 Add/Drop Multiplexing—Per Arrangement*

USOC	1 Year	3 year	5 year	Mo. Ext.
MPECX	$1,500.00	$1,200.00	$950.00	$1,650.00

(b) Add/Drop Function—Per DS-3

USOC	Monthly	Nonrecurring Charge
MXJBX	$150.00	$0

* Concatenated services cannot be multiplexed.

Rates contained in this transmittal are subject to subsequent adjustment, effective retrospectively, in the event the Commission or a court subsequently authorizes Nevada to correct its rates pursuant to pending motions, or petitions for reconsideration or waiver, or in the event of any other adjustment to an order of the Commission or a court.

(This page filed under Transmittal No. 44)

ACCESS SERVICE

21. Optical Carrier Network (OCN) Point-to-Point Service (Cont'd) (N)

21.3 Rates and Charges (Cont'd)

(A) OC-3/OC-3c (Cont'd)

	USOC	Monthly	Nonrecurring Charge
(4) Optional Features and Functions (Cont'd)			
(b) Add/Drop Function (Cont'd) -Per DS1	MXJAX	$55.00	$0
(c) 1+1 Protection -Per OC-3/OC-3c Local Distribution Channel	P8T	$180.00	$0
(d) 1+1 Protection with Cable Survivability -Per OC-3/OC-3c Local Distribution Channel	P3S	$180.00	$500.00
(e) 1+1 Protection with Route Survivability -Per OC-3/OC-3c Local Distribution Channel	P8T	(Apply P8T rate above, plus Per Quarter Route Mile below) (P8T + S2DXY)	
-Per Quarter Route Mile	S2DXY	$50.00	$0 (N)

(This page filed under Transmittal No. 7)

21. Optical Carrier Network (OCN) Point-to-Point Service (Cont'd) (N)

21.3 Rates and Charges (Cont'd)

(A) OC-3/OC-3c (Cont'd)

	USOC	Monthly	Nonrecurring Charge
(4) Optional Features and Functions (Cont'd)			
(f) Shared Network Arrangement -Processing Charge per Service Order	NRBOP	$0	$30.00

(5) Moves (OC-3/OC-3c)

(a) Service Rearrangement

See Section 7.2.4, preceding for rates and charges.

(b) Moves of Point of Termination

See Section 13.4, preceding for rates and charges.

(c) Moving Customer Premises

See Section 7.2.7, preceding for rates and charges. (N)

21. Optical Carrier Network (OCN) Point-to-Point Service (Cont'd)

21.3 Rates and Charges (Cont'd)

(B) OC-12/OC-12c

(1) Local Distribution Channel

-Per Point of Termination

USOC	1 Year	3 year	5 year	Mo. Ext.
TMECS	$4,800.00	$4,000.00	$3,000.00	$5,250.00

(2) Interoffice Transport

-Mileage	USOC	1 Year	3 year	5 year	Mo. Ext.
-Fixed	1L5XX	$3,600.00	$2,925.00	$2,750.00(I)	$4,100.00
-Per Mile	1L5XX	$260.00	$260.00	$220.00	$350.00

(3) Collocation Transport—Transport Facilities between Collocation Arrangements

	USOC	1 Year	3 year	5 year	Mo. Ext.
-Fixed	1H48S	$3,600.00(R)	$2,925.00(R)	$2,750.00(R)	$4,100.00(R)
-Per Mile	1H48S	$260.00	$260.00(R)	$220.00(R)	$350.00(R)

(4) Optional Features and Functions

(a) OC-12 Add/Drop Multiplexing—Per Arrangement*

USOC	1 Year	3 year	5 year	Mo. Ext.
MPEDX	$3,200.00	$2,800.00	$2,100.00	$3,575.00

(b) Add/Drop Function—Per OC-3

USOC	Monthly	Nonrecurring Charge
MXJCX	$250.00	$0

* Concatenated services cannot be multiplexed.

Rates contained in this transmittal are subject to subsequent adjustment, effective retrospectively, in the event the Commission or a court subsequently authorizes Nevada to correct its rates pursuant to pending motions, or petitions for reconsideration or waiver, or in the event of any other adjustment to an order of the Commission or a court.

(This page filed under Transmittal No. 44)

ACCESS SERVICE

21. Optical Carrier Network (OCN) Point-to-Point Service (Cont'd) (N)

21.3 Rates and Charges (Cont'd)

(B) OC-12/OC-12c (Cont'd)

	USOC	Monthly	Nonrecurring Charges
(4) Optional Features and Functions (Cont'd)			
(b) Add/Drop Function (Cont'd) -Per DS3	MXJBX	$150.00	$0
(c) 1+1 Protection -Per OC-12/OC-12c Local Distribution Channel	P8T	$260.00	$0
(d) 1+1 Protection with Cable Survivability -Per OC-12/OC-12c Local Distribution Channel	P3S	$260.00	$600.00
(e) 1+1 Protection with Route Survivability -Per OC-12/OC-12c Local Distribution Channel	P8T	(Apply P8T rate above, plus Per Quarter Route Mile below) (P8T + S2DXY)	
-Per Quarter Route Mile	S2DXY	$100.00	$0

(N)

(This page filed under Transmittal No. 7)

21. Optical Carrier Network (OCN) Point-to-Point Service (Cont'd) (N)

21.3 Rates and Charges (Cont'd)

(B) OC-12/OC-12c (Cont'd)

	USOC	Monthly	Nonrecurring Charge
(4) Optional Features and Functions (Cont'd)			
(f) Shared Network Arrangement -Processing Charge per Service Order	NRBOP	$0	$30.00

(5) Moves (OC-12/OC-12c)

(a) Service Rearrangements

See Section 7.2.4, preceding for rates and charges.

(b) Moves of Point of Termination

See Section 13.4, preceding for rates and charges.

(c) Moving Customer Premises

See Section 7.2.7, preceding for rates and charges. (N)

21. Optical Carrier Network (OCN) Point-to-Point Service (Cont'd)

21.3 Rates and Charges (Cont'd)

(C) OC-48/OC-48c

(1) Local Distribution Channel

Per Point of Termination

USOC	1 Year	3 year	5 year	Mo. Ext.
TMECS	$11,400.00	$9,800.00	$7,000.00	$12,250.00

(2) Interoffice Transport

-Mileage	USOC	1 Year	3 year	5 year	Mo. Ext.
-Fixed	1L5XX	$6,700.00	$5,625.00	$4,500.00	$7,875.00
-Per Mile	1L5XX	$300.00	$260.00	$220.00	$350.00

(3) Collocation Transport—Transport Facilities between Collocation Arrangements

	USOC	1 Year	3 year	5 year	Mo. Ext.
-Fixed	1H48S	$6,700.00(R)	$5,625.00(R)	$4,500.00(R)	$7,875.00(R)
-Per Mile	1H48S	$300.00(I)	$260.00(R)	$220.00(R)	$350.00(R)

(4) Optional Features and Functions

(a) OC-48 Add/Drop Multiplexing—Per Arrangement*

USOC	1 Year	3 year	5 year	Mo. Ext.
MXRFX	$5,550.00	$4,625.00	$3,700.00	$6,375.00

(b) Add/Drop Function—Per OC-3

USOC	Monthly	Nonrecurring Charge
MXJEX	$625.00	$0

* Concatenated services cannot be multiplexed.

Rates contained in this transmittal are subject to subsequent adjustment, effective retrospectively, in the event the Commission or a court subsequently authorizes Nevada to correct its rates pursuant to pending motions, or petitions for reconsideration or waiver, or in the event of any other adjustment to an order of the Commission or a court.

(This page filed under Transmittal No. 44)

ACCESS SERVICE

21. Optical Carrier Network (OCN) Point-to-Point Service (Cont'd) (N)

21.3 Rates and Charges (Cont'd)

(C) OC-48/OC-48c (Cont'd)

	USOC	Monthly	Nonrecurring Charge
(4) Optional Features and Functions (Cont'd)			
(b) Add/Drop Function (Cont'd)			
-Per OC-3	MXJCX	$250.00	$0
-Per DS3	MXJBX	$150.00	$0
(c) 1+1 Protection			
-Per OC-48/OC-48c Local Distribution Channel	P8T	$1,410.00	$0
(d) 1+1 Protection with Cable Survivability			
-Per OC-48/OC-48c Local Distribution Channel	P3S	$1,410.00	$700.00
(e) 1+1 Protection with Route Survivability			
-Per OC-48/OC-48c Local Distribution Channel	P8T	(Apply P8T rate above, plus Per Quarter Route Mile below) (P8T + S2DXY)	
-Per Quarter Route Mile	S2DXY	$125.00	$0

(N)

(This page filed under Transmittal No. 7)

ACCESS SERVICE

21. Optical Carrier Network (OCN) Point-to-Point Service (Cont'd)

21.3 Rates and Charges (Cont'd)

(C) OC-48/OC-48c (Cont'd)

	USOC	Monthly	Nonrecurring Charge	
(4) Optional Features and Functions (Cont'd)				
(f) Point-to-Point OC-48 Regenerator -each	RGY48	$5,500.00	$0	
(g) Shared Network Arrangement -Processing Charge per Service Order	NRBOP	$0	$30.00	(N) (N)

(5) Moves (OC-48/OC-48c)

(a) Service Rearrangement

See Section 7.2.2, preceding for rates and charges. (T)

(b) Moves of Point of Termination

See Section 7.2.3, preceding for rates and charges. (T)

(c) Moving Customer Premises

See Section 7.2.3, preceding for rates and charges. (T)

(This page filed under Transmittal No. 29)

ACCESS SERVICE

21. Optical Carrier Network (OCN) Point-to-Point Service (Cont'd) (N)

21.3 Rates and Charges (Cont'd)

(D) OC-192

	USOC	3 year	5 year	Mo. Ext.
(1) Local Distribution Channel -Per Point of Termination	TMECS	$29,400.00	$21,000.00	$36,000.00
(2) Interoffice Transport -Mileage -Fixed	1L5XX	$16,875.00	$13,500.00	$23,625.00
-Per Mile	1L5XX	$360.00	$300.00	$450.00
(3) Collocation Transport -Transport Facilities between Collocation Arrangements -Fixed	1H48S	$16,875.00	$13,500.00	$23,625.00
-Per Mile	1H48S	$360.00	$300.00	$450.00
(4) Optional Features and Functions				
(a) OC-192 Add/Drop Multiplexing* -Per Arrangement	MXRGX	$12,000.00	$9,600.00	$16,800.00

	USOC	Monthly	Nonrecurring Charge
(b) Add/Drop Function -per OC-48	MXJFX	$1,800.00	$0

(N)

*Concatenated services cannot be multiplexed.

(This page filed under Transmittal No. 29)

21. Optical Carrier Network (OCN) Point-to-Point Service (Cont'd)

21.3 Rates and Charges (Cont'd)

(D) OC-192 (Cont'd)

	USOC	Monthly	Nonrecurring Charge	
(4) Optional Feature and Functions (Cont'd)				
(b) Add/Drop Function (Cont'd)				
-Per OC-12	MXJEX	$625.00	$0	
-Per OC-3	MXJCX	$250.00	$0	
(c) 1+1 Protection				(N)
-Per OC-192 Local Distribution Channel	P8T	$2,700.00	$0	
(d) 1+1 Protection with Cable Survivability				
-Per OC-192 Local Distribution Channel	P3S	$2,700.00	$800.00	
(e) 1+1 Protection with Route Survivability				
-Per OC-192 Local Distribution Channel	P8Tplus	(Apply P8T rate above, Per Quarter Route Mile below) (P8T + S2DXY)		
-Per Quarter Route Mile	S2DXY	$150.00	$0	(N)
(f) Point-to-Point OC-192 Regenerator				(T)
-each	RGY	$11,000.00	$0	

(5) Moves (OC-192)

(a) Service Rearrangement

See Section 7.2.2, preceding for rates and charges.

(b) Moves of Point of Termination

See Section 7.2.3, preceding for rates and charges.

(c) Moving Customer Premises

See Section 7.2.3, preceding for rates and charges.

(This page filed under Transmittal No. 47)

21. Optical Carrier Network (OCN) Point-to-Point Service (Cont'd)

21.3 Rates and Charges (Cont'd)

(E) Installation and Rearrangement Charges

	USOC	Administrative Charge, per Order	Design and Central Office Connection Charge, per circuit	Customer Connection, Charge, per termination	
		ORCMX	NRBCL	NRBBL	
OC-3/OC-3c		$60.00	$ 375.00	$450.00	
OC-12/OC-12c		60.00	375.00	450.00	
OC-48/OC-48c		60.00	500.00	600.00	
OC-192		60.00	2,250.00	600.00	(N)

(This page filed under Transmittal No. 29)

ACCESS SERVICE

	Page	
22. Metropolitan Statistical Area Access Services	22-1	(N)
22.1 General Description	22-2	
22.2 Metropolitan Statistical Areas	22-3	
22.3 Service Available in an MSA	22-3	
22.4 Rate Regulations	22-4	
22.5 Rates and Charges	22-10	
22.6 Wire Center Information	22-44	(N)

(This page filed under Transmittal No. 43)

22. Metropolitan Statistical Area Access Services (N)

22.1 General Description

(A) This section of the tariff provides the regulations, rates and terms and conditions that apply to telecommunications services provided by the Telephone Company in the Metropolitan Statistical Areas (MSAs) in which the Telephone Company has received Phase II pricing flexibility pursuant to Subpart H of Part 69 of the Commission's Rules. MSAs are divided into the categories below:

(1) Full Service MSAs

Full Service Relief MSAs are those MSAs which qualified for Phase II pricing flexibility for all elements of service, i.e., local channels (channel terminations) between LEC end offices and customer (end user) premises; entrance facilities; dedicated interoffice facilities; local channels (channel terminations) between an interexchange carrier's point of presence and a serving wire center. The Full Service Relief MSAs are set forth in Section 22.2(A), following.

(2) Limited Service MSAs

Limited Service Relief MSAs are those MSAs that qualified for Phase II pricing flexibility for all elements of service except local channels (channel terminations) between a LEC end office and a customer (end user) premise. The Limited Service Relief MSAs are set forth in Section 22.2(B), following.

(B) The services provided in MSAs pursuant to this section of the tariff are set forth in Section 22.3, following. These services are comparable to the SWA Dedicated Transport Services in Sections 6.8.1(A), 6.8.1(B), 6.8.1(I), and the Special Access Services in Sections 7, 8, 20, and 21. The general regulations, service descriptions, and rate regulations for the SWA Dedicated Transport Services in Section 6 and the Special Access Services in Sections 7, 8, 20, and 21 are also applicable to the services specified in this section.

(B) Unless otherwise provided for in this section, regulations set forth in Sections 1, 2, 5, and 13 are also applicable. (N)

22. Metropolitan Statistical Area Access Services (Cont'd) (N)

22.2 Metropolitan Statistical Areas

A. Full Service Relief MSAs are listed below:

State	MSA
Nevada	

B. Limited Service Relief MSAs are listed below:

State	MSA
Nevada	Reno

22.3 Services Available in an MSA

The following services are available in MSAs with Full and Limited Service Relief:

Special Access
Voice Grade Service
Program Audio Service
Video Service
Digital Data Service
High Capacity Service
Gigabit Ethernet Metropolitan Area Network(GigaMAN)
Multi-service Optical Network (MON)
Broadband Circuit Service (BCS)*
Optical Carrier Network (OCN) Point-to-Point
Switched Access/Dedicated Transport
Voice Grade
DS1
DS3
SS7

* This option is limited to existing customers at existing locations as of January 11, 2002. (N)

ACCESS SERVICE

22. Metropolitan Statistical Area Access Services (Cont'd) (N)

22.4 Rate Regulations

(A) Figure 1 illustrates services provided within an MSA located in a Full Service Relief Area. The rates and charges for all associated rate elements for services in a Full Service Relief Area are contained in Section 22.5, following.

Full Service Relief Area

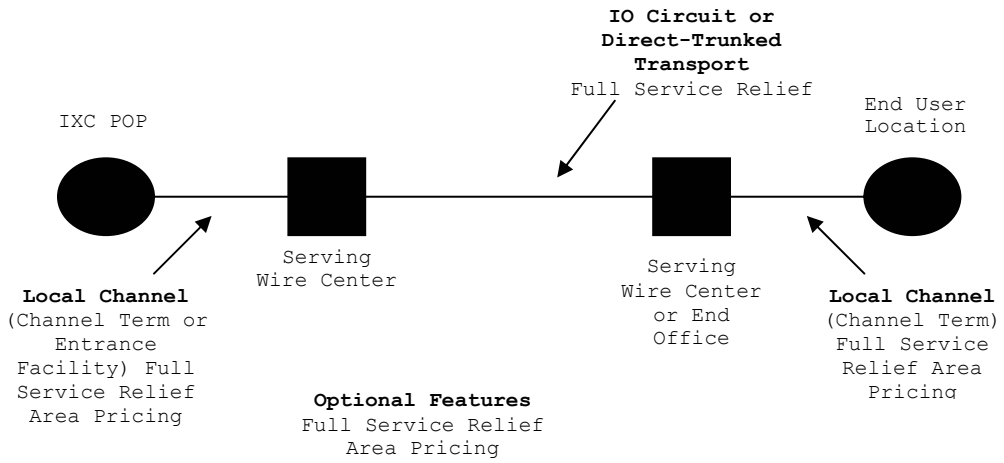

Figure 1 (N)

(This page filed under Transmittal No. 43)

22. Metropolitan Statistical Area Access Services (Cont'd) (N)

22.4 Rate Regulations (Cont'd)

(B) Figure 2 illustrates services provided within an MSA located in a Limited Service Relief Area. The rates and charges for all associated rate elements for services in a Limited Service Relief Area are contained in Section 22.5, except for the local channels (channel terminations) between a LEC end office and a customer (end user) premise, which are referenced in Section 7, Section 8, Section 20 and Section 21 of this Tariff.

Limited Service Relief Area

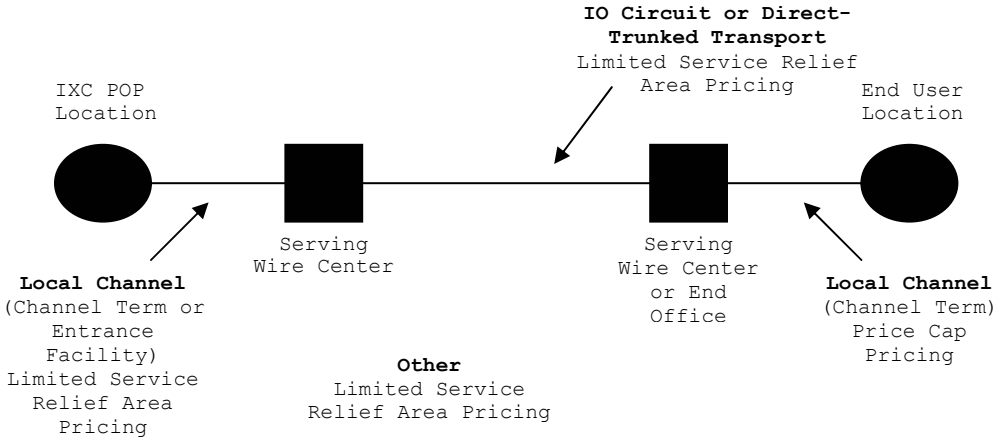

Figure 2 (N)

22. Metropolitan Statistical Area Access Services (Cont'd) (N)

22.4 Rate Regulations (Cont'd)

(C) Figure 3 illustrates a service provided from two MSAs with one MSA located in a Full Service Relief Area and one MSA located in a Limited Service Relief Area. The rates and charges for local channels and optional features located in the Full Service Relief Area are obtained as previously stated in 22.4(A). The rates and charges for local channels and optional features located in the Limited Service Relief Area are obtained as stated in 22.4(B). Interoffice channels between a Full Service Relief Area and a Limited Service Relief Area are rated the same as that of an interoffice channel in a Limited Service Relief Area and rates and charges are obtained as stated in 22.4(B) preceding.

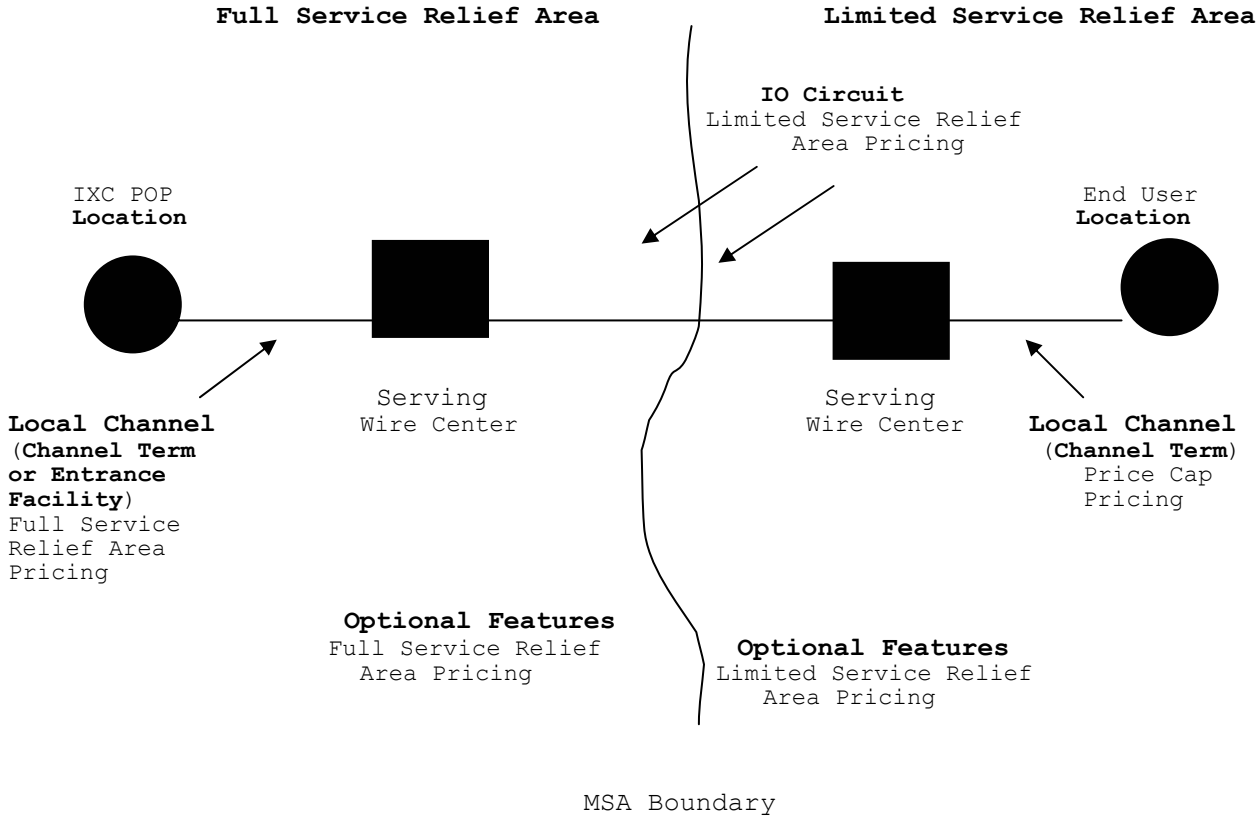

Figure 3 (N)

22. Metropolitan Statistical Area Access Services (Cont'd) (N)

22.4 Rate Regulations (Cont'd)

(D) Figure 4 illustrates a service provided from two MSAs with one MSA located in a Full Service Relief Area and one MSA located in a Non-Relief Area. The rates and charges for local channels and optional features located in the Full Service Relief Area are obtained as stated in 22.4(A) preceding.

Interoffice channels between a Full Service Relief Area and a Non-Relief Area are rated the same as that of an interoffice channel in a Non-Relief Area.

Rates and charges for local channels, interoffice channels and optional features in a Non-Relief Area are obtained in Sections 6.8.1(A), 6.8.1(B), 6.8.1(I), Section 7, Section 8, Section 20 and Section 21 of this Tariff.

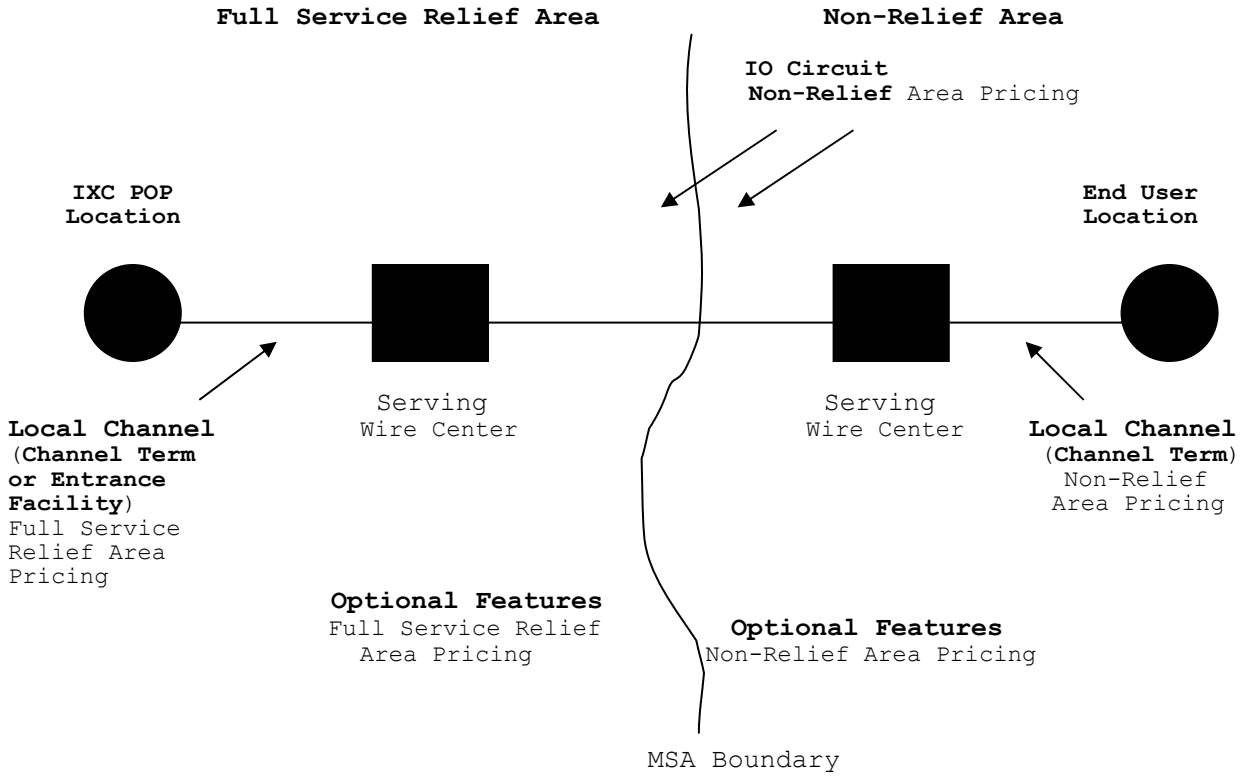

Figure 4 (N)

22. Metropolitan Statistical Area Access Services (Cont'd) (N)

22.4 Rate Regulations (Cont'd)

(E) Figure 5 illustrates service provided from two MSAs with one MSA located in a Limited Service Relief Area and one MSA located in a Non-Relief Area. The rates and charges for local channels and optional features located in the Limited Service Relief Area are obtained as stated in 22.4(B) preceding.

Interoffice channels between a Limited Service Relief Area and a Non-Relief Area are rated the same as that of an interoffice channel in a Non-Relief Area.

Rates and charges for local channels, interoffice channels and optional features in a Non-Relief Area are obtained in Sections 6.8.1(A), 6.8.1(B), 6.8.1(I), Section 7, Section 8, Section 20 and Section 21 of this Tariff.

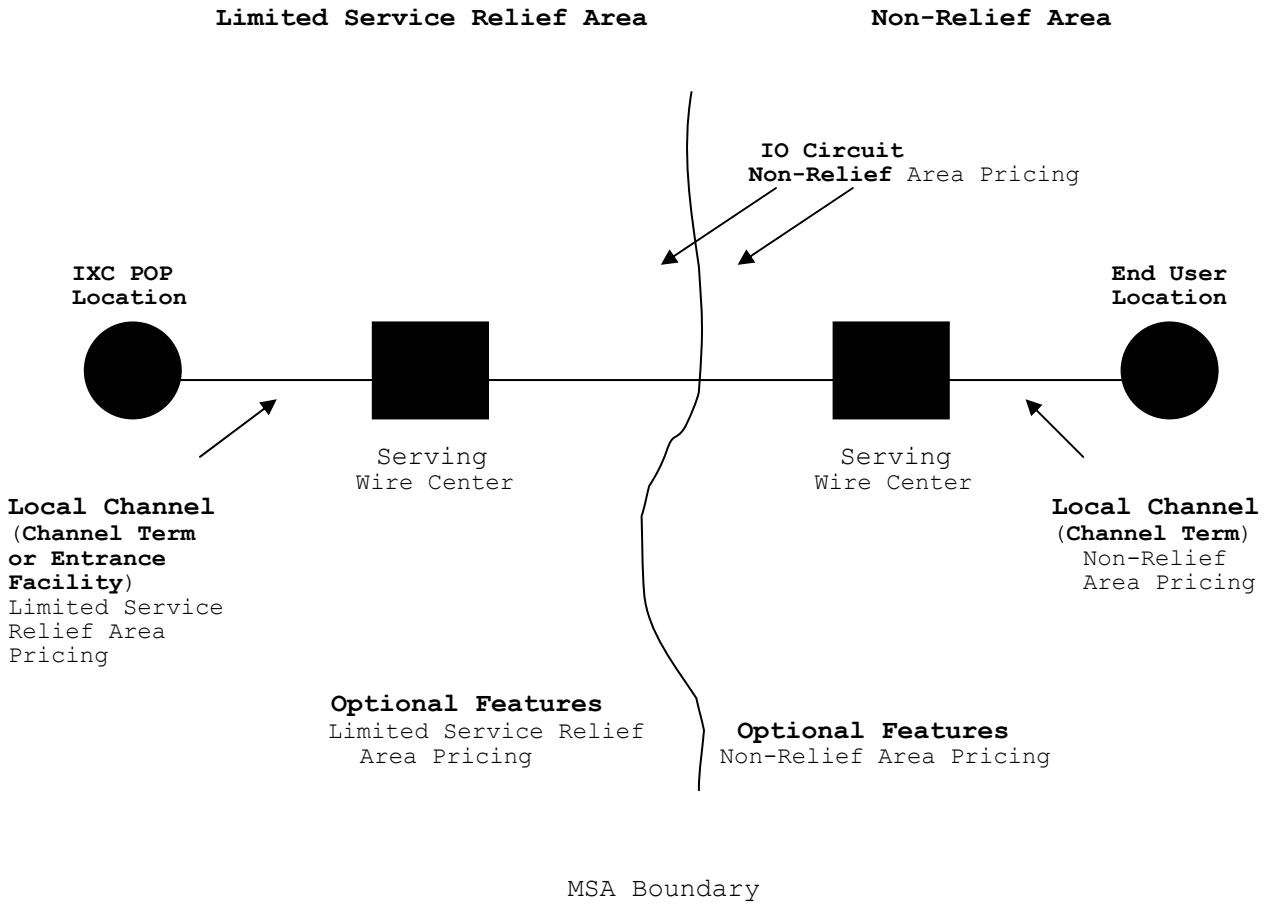

Figure 5 (N)

(This page filed under Transmittal No. 43)

22. Metropolitan Statistical Area Access Services (Cont'd)

22.4 Rate Regulations (Cont'd)

(F) Pricing Plans (N)

For the purpose of Metropolitan Statistical Area Access Services, the following plans apply when referring to Pricing Plans:

- Term Pricing Plans (TPP)

The Telephone Company ensures that rates provided under a term pricing plan will not be increased by the Telephone Company above the rates in effect at the beginning of the customer's term pricing plan period.

Customers under their current term pricing plan will continue to pay the rates in effect at the beginning of their plan period until the effective tariff rates in Section 22.5, following become lower than the rates received under their term pricing plan. (N)

(N)

22. Metropolitan Statistical Area Access Services (Cont'd)

22.5 Rates and Charges

22.5.1 Switched Access Service/Dedicated Transport

(A) Entrance Facilities

	USOC	Monthly Rates	Nonrecurring Charge
(1) Voice Grade per point of termination	TSW2X	$ 16.04	$ 500.00
	TSW4X	24.68	500.00
(2) DS1 per point of termination	TMESW	100.00	585.66
(3) DS3 per point of termination	Z0MSW	1,560.00	1,950.70

(B) Direct Trunked Transport

	USOC	Monthly Rate Fixed	Monthly Rate Per Mile
(1) Voice Grade per transport channel	1L5SW	$ 8.00	$ .50
(2) DS1 per point of termination	1L5SW	52.00	8.00
(3) DS3 per point of termination	1L5SW	330.00	40.00

(C) Chargeable Optional Features

Multiplexing - per arrangement	USOC	Monthly Rates	Nonrecurring Charge
(1) DS3 to DS1 - per arrangement	MQ3SW	$350.00	None
(2) DS1 to Voice/Digital - per arrangement	MQ1SW	170.00	None

(D) SS7 Interconnection

(1) SS7 Links

- per Link	SL7	$ 11.29	$1,131.17
- per Mile		.70	

(2) STP Port

- per Port	SLPTC	$1,046.00	

(N)

(This page filed under Transmittal No. 43)

22. Metropolitan Statistical Area Access Services (Cont'd)

22.5 Rates and Charges (Cont'd)

22.5.2 Special Access Service

22.5.2.1 Voice Grade Service

	USOC	Monthly Rates	Nonrecurring Charge
(A) Channel Termination			
- Per Termination			
- Two-Wire	T6E2X	$21.00(I)	$200.00
- Four-Wire	T6E4X	$21.00(I)	$200.00

(B) Channel Mileage

	USOC	Monthly Rate
(1) Channel Mileage Facility - Per Mile	1L5XX/CMF	$0.50
(2) Channel Mileage Termination - Per Termination	1L5XX/CMT	$8.90

(C) Optional Features and Functions

(1) Bridging

(a) Voice Bridging

	USOC	Monthly Rate
Two-Wire/ Four Wire - Per port		
- Two-Wire	BCNV2	$2.72
- Four-Wire	BCNV4	$3.42

(b) Data Bridging

Two-Wire/ Four-Wire - Per Port		
- Two-Wire	BCND2	$2.72
- Four-Wire	BCND4	$3.42

(This page filed under Transmittal No. 69)

(N)

22. Metropolitan Statistical Area Access Services (Cont'd)

22.5 Rates and Charges (Cont'd)

22.5.2 Special Access Service (Cont'd)

22.5.2.1 Voice Grade Service (Cont'd)

(C) Optional Features and Functions (Cont'd)

	USOC	Monthly Rates	Nonrecurring Charge
(2) Conditioning			
- Per Termination			
- C-Type	X1CPT	$ 3.79	None
- Improved Attenuation Distortion*	UHW	5.37	$180.80
- Improved Envelope Delay Distortion*	UHY	26.83	287.06
- Sealing Current	1HBPT	6.97	None
(3) Improved Return Loss for Effective Two-Wire or Four-Wire Transmission			
- Per termination			
- Two-Wire	1RL2W	$ 8.24	None
- Four-Wire	1RL4W	8.20	None
(4) Customer Specified Received Level -Per two-wire termination	RLS	4.61	None
(5) Data Capability - Per termination	XDCPT	5.67	$ 91.27
(6) Telephoto Capability - Per termination	XTCPT	7.40	$377.67

* Improved Attenuation Distortion and Improved Envelope Delay Distortion will continue to be provided to all customers who were provided with either or both of these optional features in conjunction with C-Type Conditioning prior to September 29, 1988.

(N)

(This page filed under Transmittal No. 43)

22. Metropolitan Statistical Area Access Services (Cont'd) (N)

22.5 Rates and Charges (Cont'd)

22.5.2 Special Access Service (Cont'd)

22.5.2.2 Program Audio Service

	USOC	Monthly Rate	Daily* Rate	Nonrecurring Charge Monthly	Nonrecurring Charge Daily
(A) Channel Termination					
- Per Termination					
- 200 to 3500 Hz	T6ECS	$23.36	$3.28	$289.75	$289.75
- 100 to 5000 Hz	T6ECS	26.92	3.51	289.75	289.75
- 50 to 8000 Hz	T6ECS	28.41	3.80	289.75	289.75
- 50 to 15000 Hz	T6ECS	106.56	11.24	289.75	289.75
(B) Channel Mileage					
(1) Channel Mileage Facility					
- Per Mile					
- 200 to 3500 Hz	1L5XX/CMF	$0.45	$0.05		
- 100 to 5000 Hz	1L5XX/CMF	$0.90	$0.10		
- 50 to 8000 Hz	1L5XX/CMF	$1.36	$0.15		
- 50 to 15000 Hz	1L5XX/CMF	$2.73	$0.28		
(2) Channel Mileage Termination					
- Per Termination					
- 200 to 3500 Hz	1L5XX/CMT	$ 9.33	$1.05		
- 100 to 5000 Hz	1L5XX/CMT	$15.50	$1.49		
- 50 to 8000 Hz	1L5XX/CMT	$18.97	$1.98		
- 50 to 15000 Hz	1L5XX/CMT	$31.76	$3.34		
(C) Optional Features and Functions					
(1) Gain Conditioning	XGC	$1.67	$.18	$73.25	$73.25

* Daily rates will be topped and maximum rates derived as set forth in 7.2.2.(B) preceding. (N)

(This page filed under Transmittal No. 43)

ACCESS SERVICE

22. Metropolitan Statistical Area Access Services (Cont'd) (N)

22.5 Rates and Charges (Cont'd)

22.5.2 Special Access Service (Cont'd)

22.5.2.3 Video Service

	USOC	Monthly Rate	Daily* Rate	Nonrecurring Charge Monthly	Nonrecurring Charge Daily
(A) Channel Termination					
- Per Termination					
- TV-1 or 2	TMEV1	$544.46	$299.45	$60.42	$60.42
- 4TV-5	TMEV4	$587.92	$323.35	$60.42	$60.42
- 6TV-5	TMEV6	$587.92	$323.35	$60.42	$60.42
- TV-15	TMEV5	$587.92	$323.35	$60.42	$60.42

(B) Channel Mileage

(1) Channel Mileage Facility			
- Per Mile			
- TV 1 or 2	1L5XX/CMF	$56.25	$30.82
- 4TV-5	1L5XX/CMF	$56.25	$30.82
- 6TV-5	1L5XX/CMF	$56.25	$30.82
- TV-15	1L5XX/CMF	$56.25	$30.82
(2) Channel Mileage Termination			
- Per Termination			
- TV-1 or 2	1L5XX/CMT	None	None
- 4TV-5	1L5XX/CMT	None	None
- 6TV-5	1L5XX/CMT	None	None
- TV-15	1L5XX/CMT	None	None

* Daily rates will be topped and maximum rates derived as set forth in 7.2.2.(B) preceding. (N)

(This page filed under Transmittal No. 43)

ACCESS SERVICE

22. Metropolitan Statistical Area Access Services (Cont'd) (N)

22.5 Rates and Charges (Cont'd)

22.5.2 Special Access Service (Cont'd)

22.5.2.4 Digital Data Service

	USOC	Monthly Rates	Nonrecurring Charge
(A) Channel Termination			
- Per Termination			
- 2.4 kbps	T6ECS	$ 82.00	$250.00
- 4.8 kbps	T6ECS	82.00	250.00
- 9.6 kbps	T6ECS	82.00	250.00
-56.0 kbps	T6ECS	82.00	250.00
-64.0 kbps	T6ECS	82.00	250.00
(B) Channel Mileage			
(1) Channel Mileage Facility			
- Per Mile			
- 2.4 kbps	1L5XX/CMF	$0.95	
- 4.8 kbps	1L5XX/CMF	0.95	
- 9.6 kbps	1L5XX/CMF	0.95	
- 56 kbps	1L5XX/CMF	0.95	
- 64 kbps	1L5XX/CMF	0.95	
(2) Channel Mileage Termination			
- Per Termination			
- 2.4 kbps	1L5XX/CMT	$13.50	
- 4.8 kbps	1L5XX/CMT	13.50	
- 9.6 kbps	1L5XX/CMT	13.50	
- 56 kbps	1L5XX/CMT	13.50	
- 64 kbps	1L5XX/CMT	13.50	
(C) Optional Features and Functions			
(1) Bridging			
- Per port	BCNDA	$16.51	

(N)

(This page filed under Transmittal No. 43)

ACCESS SERVICE

22. Metropolitan Statistical Area Access Services (Cont'd)

22.5 Rates and Charges (Cont'd)

22.5.2 Special Access Service (Cont'd)

22.5.2.5 High Capacity Service

	USOC	Monthly Rates	Nonrecurring Charge	
(A) Channel Termination (Per Point of Termination)				
- 1.544 Mbps	TMECS	$ 150.00	$ 300.00	
- 3.152 Mbps	TWT++	ICB	ICB	
- 6.312 Mbps	TWT++	ICB	ICB	
-44.736 Mbps(Month-to-Month**)	Z3MAC/TMECS	$2,274.00	$1,500.00	(C)
-44.736 Mbps(Monthly Extension)	Z3MAC/TMECS	$2,274.00	$1,500.00	(N)
-44.736 Mbps(1 Year Plan)	Z3MAC/Z31A+	$1,500.00	$1,000.00	
-44.736 Mbps(3 Year Plan)	Z3MAC/Z33A+	$ 985.00	$ 250.00	
-44.736 Mbps(5 Year Plan)	Z3MAC/Z35A+	$ 900.00	$ 0.00	
-274.176 Mbps	TWT++	ICB	ICB	

(B) Channel Mileage[2]

(1) Channel Mileage Facility (Per Mile)

- 1.544 Mbps	IL5XX/CMF	$12.75	
- 3.152 Mbps	CMF	ICB	
- 6.312 Mbps	CMF	ICB	
-44.736 Mbps(Month-to-Month**)	IL5XX/CMF	$45.00	(C)
-44.736 Mbps(Monthly Extension)	IL5XX/CMF	$45.00	(N)
-44.736 Mbps(1 Year Plan)	IL5XX/CMF	$38.00	
-44.736 Mbps(3 Year Plan)	IL5XX/CMF	$36.50	
-44.736 Mbps(5 Year Plan)	IL5XX/CMF	$35.00	(N)
-274.176 Mbps	CMF	ICB	

(2) Channel Mileage Termination (Per Termination)

-1.544 Mbps	IL5XX/CMF	$ 62.50	
-3.152 Mbps	CMT	ICB	
-6.312 Mbps	CMT	ICB	
-44.736 Mbps(Month-to-Month**)	IL5XX/CMF	$375.00	(C)
-44.736 Mbps(Monthly Extension)	IL5XX/CMF	$375.00	(N)
-44.736 Mbps(1 Year Plan)	IL5XX/CMF	$342.50	
-44.736 Mbps(3 Year Plan)	IL5XX/CMF	$337.50	
-44.736 Mbps(5 Year Plan)	IL5XX/CMF	$332.50	(N)
-274.176 Mbps	CMT	ICB	

Note 1: ICB rates and charges are filed in 7.12 following.
Note 2: When the customer orders High Capacity Service as described in 7.11 and 7.11.5.2, preceding, the Channel Mileage Facility must be ordered in conjunction with an associated Channel Termination as described in 7.2.1(A), preceding.
**This option will no longer be available for new circuits provisioned on or after, November 21, 2003. There will be no change to existing circuits. (N) (N)

Material previously appearing on this page now appears on 2nd Revised Page 22-17.

(This page filed under Transmittal No. 55)

22. Metropolitan Statistical Area Access Services (Cont'd)

22.5 Rates and Charges (Cont'd)

22.5.2 Special Access Service (Cont'd)

22.5.2.5 High Capacity Service (Cont'd)

	USOC	Monthly Rates	Nonrecurring Charge	
(C) Optional Features and Functions				(T)
(1) Multiplexing, per arrangement				(T)
DS4 to DS1	MXA++	ICB		(M)
DS3 to DS1				(M)
Month-to-Month***	MQ3	$475.00		(C)
Monthly Extension	MQ3	$475.00		(N)
1 Year	MQ3	$420.00		|
3 Year	MQ3	$410.00		|
5 Year	MQ3	$400.00		(N)
DS2 to DS1	MXD++	ICB		(M)
DS1C to DS1	MXH++	ICB		(M)
DS1 to Voice/Digital[1]	MQ1/MQ1++	$275.00		(T)
DS1 to DS0	QMU/QMUA1	$275.00		(M)
DS0 to Subrates				
-Up to 20 2.4 kbps services	QSU24	$175.00		
-Up to 10 4.8 kbps services	QSU48	$175.84		
-Up to 5 9.6 kbps services	QSU96	$124.84		
(2) Multiplexer Cross-Connect - per cross-connect, per central office	1L5TC	$10.00	$80.00	
(3) Transfer Arrangement (dial-up*) - per four port arrangement including control channel termination**	USV	ICB		
(D) DS1/DS3 Rollover				
-per DS1 Channel Termination	NRBR1/NRBRH		$300.00	
-per DS3 Channel Termination	NRBR3		825.00	

[1]A channel of this DS1 to a multiplexing Hub can be used for Digital Data Service (M)
or Digital Data Over Voice. (M)

* The Dial-Up option requires the customer to purchase the Controller Arrangement from 13.3.7 following.

** An additional Channel Termination charge will apply whenever a spare channel is configured as a leg to the customer premises. Additional channel mileage charges will also apply when the transfer arrangement is not located in the customer premises serving wire center

***This option will no longer be available for new circuits provisioned on or (N)
after, November 21, 2003. There will be no change to existing circuits. (N)

Certain material appearing on this page previously appeared on 1st Revised Page 22-16.
Material previously appearing on this page now appears on Original Page 22-17.1.

(This page filed under Transmittal No. 55)

ACCESS SERVICE

22. Metropolitan Statistical Area Access Services (Cont'd) (N)

22.5 Rates and Charges (Cont'd)

22.5.2 Special Access Service (Cont'd)

22.5.2.5 High Capacity Service (Cont'd) (N)

(E) Collocation Transport (M)

	USOC	Monthly Rate Fixed	Monthly Rate Per Mile	Nonrecurring Charges 1st Ckt.	Nonrecurring Charges Addl Ckt.
1.544 Mbps	(1H48S)	$54.70	$9.00	$300.00	$300.00

	USOC	Monthly Rate Fixed	Monthly Rate Per Mile	Nonrecurring Charges 1st Ckt.	Nonrecurring Charges Addl Ckt.	
44.736 Mbps	(1H48S)					(M)
Month-to-Month*		$375.00	$45.00	$1,500.00	$1,500.00	(C)
Monthly Extension		$375.00	$45.00			(N)
1 Year		$342.50	$38.00	$1,000.00	$1,000.00	
3 Year		$337.50	$36.50	$0.00	$0.00	
5 Year		$332.50	$35.00	$0.00	$0.00	(N)

*This option will no longer be available for new circuits provisioned on or after, November 21, 2003. There will be no change to existing circuits. (N) (N)

Certain material appearing on this page previously appeared on 1st Revised Page 22-17.

(This page filed under Transmittal No. 55)

22. Metropolitan Statistical Area Access Services (Cont'd) (N)

22.5 Rates and Charges (Cont'd)

2.5.2 Special Access Service (Cont'd)

22.5.2.6 DS1 Term Payment Plan

	USOC	1 Year	2 Year	3 Year	5 Year	7 Year
(a) Channel Termination - Per Point of Termination	TMECS	$140.00	$132.50	$115.00	$105.00	$100.00
(b) Channel Mileage - Channel Mileage Termination (per termination)	1L5XX	$55.00	$45.00	$40.00	$35.00	$32.50
- Channel Mileage Facility (per mile)	1L5XX	$12.25	$12.00	$9.25	$8.50	$8.25
(c) Central Office Multiplexing DS1 to DS0 voice/digital -Per arrangement	MQ1, MQ1++, QMUA1, QMU,QMU++	$260.00	$190.00	$170.00	$160.00	$150.00
(d) Collocation Transport -Channel Mileage - Fixed	1H48S	$50.00	$45.00	$40.00	$35.00	$32.50
- Per Mile	1H48S	$9.00	$9.00	$8.75	$8.50	$8.25

(e) Nonrecurring Charges	USOC	Rate
-One Time Charges -Per point of channel termination -Channel Termination	TMECS	$900.00
-Collocation Transport	1H48S	$900.00

NOTE: Channel Termination Nonrecurring Charges and Collocation Transport Nonrecurring Charges are waived on new installations of DS1 High Capacity Service with a 2, 3, 5, or 7 year DS1 TPP. (N)

(This page filed under Transmittal No. 43)

22. Metropolitan Statistical Access Area Services (Cont'd)

22.5 Rates and Charges (Cont'd)

22.5.2 Special Access Services (Cont'd)

22.5.2.7 Gigabit Ethernet Metropolitan Area Network (GigaMAN®) (T)

(A) Recurring Charges

	USOC	Monthly Extension	Term Pricing Plan 12 Mo.	36 Mo.	60 Mo.	NRC
(1) Local Distribution Channel						
- Per Point of Termination Terminating Bit Rate 1 Gbps - All States	TMECS	$3,800.00	$3,300.00	$2,850.00	$2,500.00	
(2) Interoffice Transport Mileage - Fixed - All States	1L5XX	$250.00	$250.00	$200.00	$100.00	
- Per Mile 1 Gbps - All States	1L5XX	$125.00	$125.00	$100.00	$75.00	
(3) Repeater -each	VU4	$2,500.00	$2,400.00	$1,150.00	$850.00	
(4) Diversity Options						
Local Channel Diversity -Per Channel Terminating Bit Rate 1 Gbps -All States	CPALX	$750.00	$750.00	$750.00	$750.00	0.00
Inter Wire Center Diversity -Per Channel Terminating Bit Rate 1 Gbps -All States	CPATX	$500.00	$500.00	$500.00	$500.00	0.00
Alternate Wire Center Diversity -Per Channel Termination bit Rat 1 Gbps -All States	CPAAX	$1,200.00	$1,200.00	$1,200.00	$1,200.00	0.00

(N)

Certain material previously appearing on this page now appears on 2nd Revised Page 22-19.1.

(This page filed under Transmittal No. 56)

ACCESS SERVICE

22. Metropolitan Statistical Access Area Services (Cont'd) (N)

22.5 Rates and Charges (Cont'd)

22.5.2 Special Access Services (Cont'd)

22.5.2.7 Gigabit Ethernet Metropolitan Area Network (GigaMAN®) (Cont'd) (N)

(B) Installation and Rearrangement Charges (M)

All States

	USOC	12 Months	36 Months	60 Months
(1) Administrative Charge per Order	ORCMX	$60.00	$60.00	$60.00
(2) Design Central Office Connection Charge per circuit	NRMCK	N/A	N/A	N/A
(3) Customer Connection Charge per termination	NRBBL	$1,500.00	$1,500.00	$1,500.00

(M)

Certain material appearing on this page previously appeared on 2nd Revised Page 22-19.

(This page filed under Transmittal No. 56)

22. Metropolitan Statistical Area Access Services (Cont'd) (N)

22.5 Rates and Charges (Cont'd)

22.5.2 Special Access Service (Cont'd)

22.5.2.8 Multi-service Optical Network (MON) Ring Service

(A) Nonrecurring Charges	USOC	Nonrecurring Charge
(1) Administrative Charge - per customer order	ORCMX	$125.00
(2) Design and Central Office Connection Charge - per network and per riding circuit	NRMCK	600.00
(3) Customer Connection Charge (Service Establishment) - per node	NRBBL	7,500.00
(4) Customer Connection Charge (Subsequent Installation) - per subsequent shelf	NHCNL	1,000.00

(B) Recurring Charges	USOC	Monthly Rates 3 Year	Monthly Rates 5 Year	Monthly Extension
(1) Customer Premises Node (includes first shelf)	F2ND1	$12,000.00	$9,600.00	$16,800.00
(2) Customer Premises Node - per subsequent shelf	F2NDS	9,000.00	7,200.00	12,600.00
(3) Central Office Node (includes first shelf)	F2NC1	12,000.00	9,600.00	16,800.00
(4) Central Office Node - per subsequent shelf	F2NCS	9,000.00	7,200.00	12,600.00
(5) Channel Mileage - per V-H mile or fraction thereof (2 mile min.)	IYAZX	500.00	400.00	700.00
(6) Optical Amplifier				
- C band (per location)	67QXX	5,400.00	3,600.00	7,600.00
- L band (per location)	67QSX	5,400.00	3,600.00	7,600.00
(7) Regenerator -(as required)				
-up to 2.5 Gbps (per shelf)	V8RXX	7,500.00	5,000.00	10,500.00
-up to 10 Gbps (per circuit)	V8R2C	15,000.00	10,000.00	21,000.00

(N)

(This page filed under Transmittal No. 43)

22. Metropolitan Statistical Area Access Services (Cont'd) (N)

22.5 Rates and Charges (Cont'd)

22.5.2 Special Access Service (Cont'd)

22.5.2.8 Multi-service Optical Network (MON) Ring Service (Cont'd)

(B) Recurring Charges (Cont'd)

	USOC	Monthly Rates 3 Year	Monthly Rates 5 Year	Monthly Extension
(8) Bulk Power -per first shelf, for shelves 1 thru 4	CBVDX	2,000.00	1,600.00	2,600.00
(9) Bulk Power -per fifth subsequent shelf for shelves 5 thru 8	CBVDS	1,600.00	1,300.00	2,100.00

(C) Ports

-per port/per circuit terminating location

(1) ETR™/1/ - unprotected channel	POYKW	$975.00	$750.00	$1,400.00
(2) FICON™/1/ (1.0625 Gbps) - unprotected channel	POYMW	975.00	750.00	1,400.00
- protected channel	POYMP	1,950.00	1,500.00	2,800.00
(3) FICON™/1/ (2.125 Gbps) - unprotected channel	POYWW	1,700.00	1,300.00	2,400.00
- protected channel	POYWP	3,400.00	2,600.00	4,800.00
(4) ISC™/1/ - unprotected channel	POYJW	3,250.00	1,250.00	4,600.00
(5) Fibre Channel (1.0625 Gbps) - unprotected channel	POYNW	1,200.00	900.00	1,700.00
- protected channel	POYNP	2,400.00	1,800.00	3,400.00

/1/ ESCON™, ETR™, FICON™, ISC™ and GDPS™ are registered trademarks of the International Business Machines (IBM) Corporation, Armonk, NY 10504 (N)

(This page filed under Transmittal No. 43)

ACCESS SERVICE

22. Metropolitan Statistical Area Access Services (Cont'd) (N)

22.5 Rates and Charges (Cont'd)

22.5.2 Special Access Service (Cont'd)

22.5.2.8 Multi-service Optical Network (MON) Ring Service (Cont'd)

(C) Ports (Cont'd)	USOC	Monthly Rates 3 Year	Monthly Rates 5 Year	Monthly Extension
-per port/per circuit terminating location				
(6) Fibre Channel (2.125 Gbps)				
- unprotected channel	POYYW	$1,700.00	$1,300.00	$2,400.00
- protected channel	POYYP	3,400.00	2,600.00	4,800.00
(7) Gigabit Ethernet				
- unprotected channel	POYLW	1,200.00	900.00	1,700.00
- protected channel	POYLP	2,400.00	1,800.00	3,400.00
(8) 10 Gigabit Ethernet (WAN-PHY)				
- unprotected channel	POYTW	15,000.00	12,500.00	21,000.00
- protected channel	POYTP	20,000.00	16,700.00	28,000.00
(9) SONET OC-12/OC-12c				
- unprotected channel	POYFW	1,300.00	1,000.00	1,900.00
- protect channel	POYFP	2,600.00	2,000.00	3,700.00
(10) SONET OC-48/48c				
- unprotected channel	POYGW	4,400.00	3,700.00	6,000.00
- protected channel	POYGP	6,600.00	5,560.00	9,000.00
(11) SONET OC-192				
- unprotected channel	POYOW	15,000.00	12,500.00	21,000.00
- protected channel	POYOP	20,000.00	16,700.00	28,000.00 (N)

(This page filed under Transmittal No. 43)

ACCESS SERVICE

22. Metropolitan Statistical Area Access Services (Cont'd) (N)

22.5 Rates and Charges (Cont'd)

22.5.2 Special Access Service (Cont'd)

22.5.2.8 Multi-service Optical Network (MON) Ring Service (Cont'd)

(C) Ports (Cont'd)	USOC	Monthly Rates 3 Year	Monthly Rates 5 Year	Monthly Extension
-per port/per circuit terminating location				
(12) Sub-Rate System				
- unprotected channel	POYSW	$1,300.00	$1,000.00	$1,900.00
- protected channel	POYSP	2,600.00	2,000.00	3,700.00
(13) ESCON™/1/*				
- unprotected channel	POYHW	100.00	100.00	150.00
- protected channel	POYHP	100.00	100.00	150.00
(14) Fast Ethernet*				
- unprotected channel	POYCW	325.00	250.00	500.00
- protected channel	POYCP	500.00	400.00	800.00
(15) D1 Video*				
- unprotected channel	POYVW	100.00	100.00	150.00
- protected channel	POYVP	100.00	100.00	150.00
(16) SONET OC-3/OC-3c*				
- unprotected channel	POYEW	100.00	100.00	150.00
- protected channel	POYEP	100.00	100.00	150.00

/1/ ESCON™, ETR™, FICON™, ISC™ and GDPS™ are registered trademarks of the International Business Machines (IBM) Corporation, Armonk, NY 10504

*Available only when ordered with sub-rate system. (N)

(This page filed under Transmittal No. 43)

ACCESS SERVICE

22. Metropolitan Statistical Area Access Services (Cont'd) (N)

22.5 Rates and Charges (Cont'd)

22.5.2 Special Access Service (Cont'd)

22.5.2.9 Broadband Circuit Service*

(A) OC-3

(1) Channel Termination
– per BCS Circuit, per Customer Premises

Volume Option	USOC	Monthly Rate 1 year	Monthly Rate 3 year	Monthly Rate 5 year	Nonrecurring Charges 1 year	Nonrecurring Charges 3 year	Nonrecurring Charges 5 year
	T6XBX/T6XB+	$4,200	$2,930	$1,700	$2,000	$1,000	$0
2 plus	T6XEX/T6XE+	n/a	$2,635	$1,670	n/a	$750	$0

(2) Mileage
– per BCS Circuit

(a) Fixed

USOC	Monthly Rate 1 year	Monthly Rate 3 year	Monthly Rate 5 year	Nonrecurring Charges 1 year	Nonrecurring Charges 3 year	Nonrecurring Charges 5 year
1HYBS/1HYB+	$1,600	$1,400	$1,000	$0	$0	$0

(b) Per Mile

USOC	Monthly Rate 1 year	Monthly Rate 3 year	Monthly Rate 5 year	Nonrecurring Charges 1 year	Nonrecurring Charges 3 year	Nonrecurring Charges 5 year
1HYBS/1HYB+	$193	$154	$110	$0	$0	$0

(3) Optional Features

(a) Equipment Protection
Per Channel Termination,
per Customer Premises

USOC	Monthly Rate 1 year	Monthly Rate 3 year	Monthly Rate 5 year	Nonrecurring Charges 1 year	Nonrecurring Charges 3 year	Nonrecurring Charges 5 year
APPBX/APPB+	$195	$195	$195	$150	$75	$0

* Effective, January 11, 2002, BCS will no longer be available to customers. Grandfathered BCS Customers will maintain their existing service arrangement until their contract expires unless they choose to convert to another service. No changes to existing BCS service arrangements will be permitted, nor will any renewals be allowed. (N)

(This page filed under Transmittal No. 43)

ACCESS SERVICE

22. Metropolitan Statistical Area Access Services (Cont'd) (N)

22.5 Rates and Charges (Cont'd)

22.5.2 Special Access Service (Cont'd)

22.5.2.9 Broadband Circuit Service* (Cont'd)

(A) OC-3 (Cont'd)

(3) Optional Features (Cont'd)

(b) Loop Redundancy
Per Channel Termination,
per Customer Premises

	Monthly Rate			Nonrecurring Charges		
USOC	1 year	3 year	5 year	1 year	3 year	5 year
DVDLX/DVDL+	$390	$390	$390	$600	$300	$0

(c) Central Office Multiplexing

(1) Central Office Multiplexing System Arrangement

- Per OC-3 System Arrangement

	Monthly Rate			Nonrecurring Charges		
USOC	1 year	3 year	5 year	1 year	3 year	5 year
MXNBX/MXNB+	$1,800	$1,200	$950	$600	$300	$0

(2) Central Office Multiplexing Ports

- Per Port

(a) DS-1 Port

	Monthly Rate			Nonrecurring Charges		
USOC	1 year	3 year	5 year	1 year	3 year	5 year
Initial Order: PYVP1/PYVP+	$60	$60	$60	$300	$150	$0
Modification: NRMBA/NRMB+	$60	$60	$60	$300	$150	$150

* Effective, January 11, 2002, BCS will no longer be available to customers. Grandfathered BCS Customers will maintain their existing service arrangement until their contract expires unless they choose to convert to another service. No changes to existing BCS service arrangements will be permitted, nor will any renewals be allowed. (N)

(This page filed under Transmittal No. 43)

ACCESS SERVICE

22. Metropolitan Statistical Area Access Services (Cont'd) (N)

22.5 Rates and Charges (Cont'd)

22.5.2 Special Access Service (Cont'd)

22.5.2.9 Broadband Circuit Service* (Cont'd)

(A) OC-3 (Cont'd)

(3) Optional Features (Cont'd)

(c) Central Office Multiplexing (Cont'd)

(2) Central Office Multiplexing Ports

(b) DS-3 Port

		Monthly Rate			Nonrecurring Charges		
	USOC	1 year	3 year	5 year	1 year	3 year	5 year
Initial Order:	PYVP3/PYVP+	$150	$150	$150	$600	$300	$0
Modification:	NRMBB/NRMB+	$150	$150	$150	$600	$300	$300

(4) Service-to-Service Through Connect Arrangement (OC-3)

	Monthly Rate			Nonrecurring Charges		
USOC	1 year	3 year	5 year	1 year	3 year	5 year
THA	$0	$0	$0	$300	$300	$300

(5) Moves (OC-3)

(a) Service Facility Move

	Monthly Rate			Nonrecurring Charges		
USOC	1 year	3 year	5 year	1 year	3 year	5 year
NRMBS	$0	$0	$0	$650	$650	$650

(b) Moves of Point of Termination

See Section 13, preceding for rates and charges.

(c) Moving Customer Premises

See Section 13, preceding for rates and charges.

*Effective, January 11, 2002, BCS will no longer be available to customers. Grandfathered BCS Customers will maintain their existing service arrangement until their contract expires unless they choose to convert to another service. No changes to existing BCS service arrangements will be permitted, nor will any renewals be allowed.

(N)

(This page filed under Transmittal No. 43)

ACCESS SERVICE

22. Metropolitan Statistical Area Access Services (Cont'd) (N)

22.5 Rates and Charges (Cont'd)

22.5.2 Special Access Service (Cont'd)

22.5.2.9 Broadband Circuit Service* (Cont'd)

(A) OC-3 (Cont'd)

(6) Collocation Transport

	USOC	Monthly Rate Fixed	Monthly Rate Per Mile	Nonrecurring Charges
BCS Circuit	(1H48S)			
1 Year		$1,600	$193	$3,000
3 Year		$1,400	$154	$1,500
5 Year		$1,150	$110	$ 0

(7) Interconnect Arrangement with Other Special Access Services OC-3 Cross-Connect

	USOC	Monthly Rate	Nonrecurring Charges
Cross-Connect	(THA)		
1 Year		$0	$300
3 Year		$0	$300
5 Year		$0	$300

* Effective, January 11, 2002, BCS will no longer be available to customers. Grandfathered BCS Customers will maintain their existing service arrangement until their contract expires unless they choose to convert to another service. No changes to existing BCS service arrangements will be permitted, nor will any renewals be allowed. (N)

(This page filed under Transmittal No. 43)

ACCESS SERVICE

22. Metropolitan Statistical Area Access Services (Cont'd) (N)

22.5 Rates and Charges (Cont'd)

22.5.2 Special Access Service (Cont'd)

22.5.2.9 Broadband Circuit Service* (Cont'd)

(B) OC-12

(1) Channel Termination

- per BCS Circuit, per Customer Premises

Volume Option	USOC	Monthly Rate 1 year	Monthly Rate 3 year	Monthly Rate 5 year	Nonrecurring Charges 1 year	Nonrecurring Charges 3 year	Nonrecurring Charges 5 year
	T6XBX/T6XB+	$9,900	$8,460	$5,445	$5,000	$2,500	$0
2 plus	T6XEX/T6XE+	n/a	$7,610	$4,320	n/a	$2,500	$0

(2) Mileage

- per BCS Circuit

(a) Fixed

USOC	Monthly Rate 1 year	Monthly Rate 3 year	Monthly Rate 5 year	Nonrecurring Charges 1 year	Nonrecurring Charges 3 year	Nonrecurring Charges 5 year
1HYBS/1HYB+	$7,100	$6,500	$5,800	$0	$0	$0

(b) Per Mile

USOC	Monthly Rate 1 year	Monthly Rate 3 year	Monthly Rate 5 year	Nonrecurring Charges 1 year	Nonrecurring Charges 3 year	Nonrecurring Charges 5 year
1HYBS/1HYB+	$330	$275	$200	$0	$0	$0

(3) Optional Features

(a) Equipment Protection

- Per Channel Termination, per Customer Premises

USOC	Monthly Rate 1 year	Monthly Rate 3 year	Monthly Rate 5 year	Nonrecurring Charges 1 year	Nonrecurring Charges 3 year	Nonrecurring Charges 5 year
APPBX/APPB+	$300	$300	$300	$360	$180	$0

* Effective, January 11, 2002, BCS will no longer be available to customers. Grandfathered BCS Customers will maintain their existing service arrangement until their contract expires unless they choose to convert to another service. No changes to existing BCS service arrangements will be permitted, nor will any renewals be allowed. (N)

(This page filed under Transmittal No. 43)

ACCESS SERVICE

22. Metropolitan Statistical Area Access Services (Cont'd) (N)

22.5 Rates and Charges (Cont'd)

22.5.2 Special Access Service (Cont'd)

22.5.2.9 Broadband Circuit Service* (Cont'd)

(B) OC-12 (Cont'd)

(3) Optional Features (Cont'd)

(b) Loop Redundancy

- Per Channel Termination, per Customer Premises

	Monthly Rate			Nonrecurring Charges		
USOC	1 year	3 year	5 year	1 year	3 year	5 year
DVDLX/DVDL+	$590	$590	$590	$720	$360	$0

(c) Central Office Multiplexing

(1) Central Office Multiplexing System Arrangement

- Per OC-12 System Arrangement

	Monthly Rate			Nonrecurring Charges		
USOC	1 year	3 year	5 year	1 year	3 year	5 year
MXNBX/MXNB+	$3,750	$2,500	$1,900	$1,000	$500	$0

(2) Central Office Multiplexing Ports

- Per Port

(a) DS3 Port

	Monthly Rate			Nonrecurring Charges		
USOC	1 year	3 year	5 year	1 year	3 year	5 year
Initial Order: PYVP3/PYVP+	$150	$150	$150	$600	$300	$0
Modification: NRMBB/NRMB+	$150	$150	$150	$600	$300	$300

*Effective, January 11, 2002, BCS will no longer be available to customers. Grandfathered BCS Customers will maintain their existing service arrangement until their contract expires unless they choose to convert to another service. No changes to existing BCS service arrangements will be permitted, nor will any renewals be allowed. (N)

(This page filed under Transmittal No. 43)

ACCESS SERVICE

22. Metropolitan Statistical Area Access Services (Cont'd) (N)

22.5 Rates and Charges (Cont'd)

22.5.2 Special Access Service (Cont'd)

22.5.2.9 Broadband Circuit Service* (Cont'd)

(B) OC-12 (Cont'd)

(3) Optional Features (Cont'd)

(c) Central Office Multiplexing (Cont'd)

(2) Central Office Multiplexing Ports (Cont'd)

- Per Port

(b) OC-3 Port

		Monthly Rate			Nonrecurring Charges		
	USOC	1 year	3 year	5 year	1 year	3 year	5 year
Initial Order:	PYVPC/PYVP+	$180	$180	$180	$600	$300	$0
Modification:	NRMBD/NRMB+	$180	$180	$180	$600	$300	$300

(c) OC-3c Port

		Monthly Rate			Nonrecurring Charges		
	USOC	1 year	3 year	5 year	1 year	3 year	5 year
Initial Order:	PYVPO/PYVP+	$180	$180	$180	$600	$300	$0
Modification:	NRMBE/NRMB+	$180	$180	$180	$600	$300	$300

(4) Service-to-Service Through Connect Arrangement (OC-12)

	Monthly Rate			Nonrecurring Charges		
USOC	1 year	3 year	5 year	1 year	3 year	5 year
THA	$0	$0	$0	$300	$300	$300

*Effective, January 11, 2002, BCS will no longer be available to customers. Grandfathered BCS Customers will maintain their existing service arrangement until their contract expires unless they choose to convert to another service. No changes to existing BCS service arrangements will be permitted, nor will any renewals be allowed. (N)

(This page filed under Transmittal No. 43)

22. Metropolitan Statistical Area Access Services (Cont'd) (N)

22.5 Rates and Charges (Cont'd)

22.5.2 Special Access Service (Cont'd)

22.5.2.9 Broadband Circuit Service* (Cont'd)

(B) OC-12 (Cont'd)

(5) Moves

(a) Service Facility Move (OC-12)

	Monthly Rate			Nonrecurring Charges		
USOC	1 year	3 year	5 year	1 year	3 year	5 year
NRMBS	$0	$0	$0	$650	$650	$650

(b) Moves of Point of Termination

See Section 13, preceding for rates and charges.

(c) Moving Customer Premises

See Section 13, preceding for rates and charges.

(6) STS-1 Channel Reconfiguration Charge

	Monthly Rate			Nonrecurring Charges		
USOC	1 year	3 year	5 year	1 year	3 year	5 year
NRMBF	$0	$0	$0	$600	$600	$600

(7) Collocation Transport

BCS Circuit	USOC (1H48S)	Monthly Rate Fixed	Monthly Rate Per Mile	Nonrecurring Charges
1 Year		$7,100	$330	$5,000
3 Year		$6,500	$275	$2,500
5 Year		$5,800	$200	$0

*Effective, January 11, 2002, BCS will no longer be available to customers. Grandfathered BCS Customers will maintain their existing service arrangement until their contract expires unless they choose to convert to another service. No changes to existing BCS service arrangements will be permitted, nor will any renewals be allowed. (N)

ACCESS SERVICE

22. Metropolitan Statistical Area Access Services (Cont'd) (N)

22.5 Rates and Charges (Cont'd)

22.5.2 Special Access Service (Cont'd)

22.5.2.9 Broadband Circuit Service* (Cont'd)

(B) OC-12 (Cont'd)

(8) Interconnect Arrangement with Other Special Access Services OC-12 Cross-Connect

	USOC	Monthly Rate	Nonrecurring Charge
Cross-Connect	(THA)		
1 Year		$0	$300
3 Year		$0	$300
5 Year		$0	$300

*Effective, January 11, 2002, BCS will no longer be available to customers. Grandfathered BCS Customers will maintain their existing service arrangement until their contract expires unless they choose to convert to another service. No changes to existing BCS service arrangements will be permitted, nor will any renewals be allowed. (N)

(This page filed under Transmittal No. 43)

22. Metropolitan Statistical Area Access Services (Cont'd) (N)

22.5 Rates and Charges (Cont'd)

22.5.2 Special Access Service (Cont'd)

22.5.2.10 Optical Carrier Network (OCN) Point-to-Point Service

(A) OC-3/OC-3c

(1) Local Distribution Channel

-Per Point of Termination

USOC	1 Year	3 year	5 year	Mo. Ext.
TMECS	$2,100.00	$1,700.00	$1,300.00	$2,275.00

(2) Interoffice Transport

-Mileage	USOC	1 Year	3 year	5 year	Mo. Ext.
-Fixed	1L5XX	$1,100.00	$975.00	$886.00	$1,550.00
-Per Mile	1L5XX	$260.00	$260.00	$220.00	$350.00

(3) Collocation Transport—Transport Facilities between Collocation Arrangements

	USOC	1 Year	3 year	5 year	Mo. Ext.
-Fixed	1H48S	$1,800.00	$1,600.00	$1,400.00	$2,000.00
-Per Mile	1H48S	$260.00	$260.00	$220.00	$350.00

(4) Optional Features and Functions

(a) OC-3 Add/Drop Multiplexing—Per Arrangement*

USOC	1 Year	3 year	5 year	Mo. Ext.
MPECX	$1,500.00	$1,200.00	$950.00	$1,650.00

(b) Add/Drop Function—Per DS-3

USOC	Monthly	Nonrecurring Charge
MXJBX	$150.00	$0

(N)

* Concatenated services cannot be multiplexed.

(This page filed under Transmittal No. 43)

22. Metropolitan Statistical Area Access Services (Cont'd) (N)

22.5 Rates and Charges (Cont'd)

22.5.2 Special Access Service (Cont'd)

22.5.2.10 Optical Carrier Network (OCN) Point-to-Point Service (Cont'd)

(A) OC-3/OC-3c (Cont'd)

	USOC	Monthly	Nonrecurring Charge
(4) Optional Features and Functions (Cont'd)			
(b) Add/Drop Function (Cont'd) -Per DS1	MXJAX	$55.00	$0
(c) 1+1 Protection -Per OC-3/OC-3c Local Distribution Channel	P8T	$180.00	$0
(d) 1+1 Protection with Cable Survivability -Per OC-3/OC-3c Local Distribution Channel	P3S	$180.00	$500.00
(e) 1+1 Protection with Route Survivability -Per OC-3/OC-3c Local Distribution Channel	P8T	(Apply P8T rate above, plus Per Quarter Route Mile below) (P8T + S2DXY)	
-Per Quarter Route Mile	S2DXY	$50.00	$0 (N)

(This page filed under Transmittal No. 43)

22. Metropolitan Statistical Area Access Services (Cont'd) (N)

22.5 Rates and Charges (Cont'd)

22.5.2 Special Access Service (Cont'd)

22.5.2.10 Optical Carrier Network (OCN) Point-to-Point Service (Cont'd)

(A) OC-3/OC-3c (Cont'd)

	USOC	Monthly	Nonrecurring Charge
(4) Optional Features and Functions (Cont'd)			
(f) Shared Network Arrangement -Processing Charge per Service Order	NRBOP	$0	$30.00

(5) Moves (OC-3/OC-3c)

(a) Service Rearrangement

See Section 7.2.4, preceding for rates and charges.

(b) Moves of Point of Termination

See Section 13.4, preceding for rates and charges.

(c) Moving Customer Premises

See Section 7.2.7, preceding for rates and charges. (N)

22. Metropolitan Statistical Area Access Services (Cont'd) (N)

22.5 Rates and Charges (Cont'd)

22.5.2 Special Access Service (Cont'd)

22.5.2.10 Optical Carrier Network (OCN) Point-to-Point Service (Cont'd)

(B) OC-12/OC-12c

(1) Local Distribution Channel

-Per Point of Termination

USOC	1 Year	3 year	5 year	Mo. Ext.
TMECS	$4,800.00	$4,000.00	$3,000.00	$5,250.00

(2) Interoffice Transport

-Mileage	USOC	1 Year	3 year	5 year	Mo. Ext.
-Fixed	1L5XX	$3,600.00	$2,925.00	$2,250.00	$4,100.00
-Per Mile	1L5XX	$260.00	$260.00	$220.00	$350.00

(3) Collocation Transport—Transport Facilities between Collocation Arrangements

	USOC	1 Year	3 year	5 year	Mo. Ext.
-Fixed	1H48S	$5,200.00	$4,500.00	$4,000.00	$5,600.00
-Per Mile	1H48S	$260.00	$420.00	$400.00	$600.00

(4) Optional Features and Functions

(a) OC-12 Add/Drop Multiplexing—Per Arrangement*

USOC	1 Year	3 year	5 year	Mo. Ext.
MPEDX	$3,200.00	$2,800.00	$2,100.00	$3,575.00

(b) Add/Drop Function—Per OC-3

USOC	Monthly	Nonrecurring Charge
MXJCX	$250.00	$0

* Concatenated services cannot be multiplexed. (N)

(This page filed under Transmittal No. 43)

ACCESS SERVICE

22. Metropolitan Statistical Area Access Services (Cont'd) (N)

22.5 Rates and Charges (Cont'd)

22.5.2 Special Access Service (Cont'd)

22.5.2.10 Optical Carrier Network (OCN) Point-to-Point Service (Cont'd)

(B) OC-12/OC-12c (Cont'd)

	USOC	Monthly	Nonrecurring Charges
(4) Optional Features and Functions (Cont'd)			
(b) Add/Drop Function (Cont'd) -Per DS3	MXJBX	$150.00	$0
(c) 1+1 Protection -Per OC-12/OC-12c Local Distribution Channel	P8T	$260.00	$0
(d) 1+1 Protection with Cable Survivability -Per OC-12/OC-12c Local Distribution Channel	P3S	$260.00	$600.00
(e) 1+1 Protection with Route Survivability -Per OC-12/OC-12c Local Distribution Channel	P8T	(Apply P8T rate above, plus Per Quarter Route Mile below) (P8T + S2DXY)	
-Per Quarter Route Mile	S2DXY	$100.00	$0

(N)

(This page filed under Transmittal No. 43)

22. Metropolitan Statistical Area Access Services (Cont'd) (N)

22.5 Rates and Charges (Cont'd)

22.5.2 Special Access Service (Cont'd)

22.5.2.10 Optical Carrier Network (OCN) Point-to-Point Service (Cont'd)

(B) OC-12/OC-12c (Cont'd)

	USOC	Monthly	Nonrecurring Charge
(4) Optional Features and Functions (Cont'd)			
(f) Shared Network Arrangement -Processing Charge per Service Order	NRBOP	$0	$30.00

(5) Moves (OC-12/OC-12c)

(a) Service Rearrangements

See Section 7.2.4, preceding for rates and charges.

(b) Moves of Point of Termination

See Section 13.4, preceding for rates and charges.

(c) Moving Customer Premises

See Section 7.2.7, preceding for rates and charges. (N)

22. Metropolitan Statistical Area Access Services (Cont'd) (N)

22.5 Rates and Charges (Cont'd)

22.5.2 Special Access Service (Cont'd)

22.5.2.10 Optical Carrier Network (OCN) Point-to-Point Service (Cont'd)

(C) OC-48/OC-48c

(1) Local Distribution Channel

Per Point of Termination

USOC	1 Year	3 year	5 year	Mo. Ext.
TMECS	$11,400.00	$9,800.00	$7,000.00	$12,250.00

(2) Interoffice Transport

-Mileage	USOC	1 Year	3 year	5 year	Mo. Ext.
-Fixed	1L5XX	$6,700.00	$5,625.00	$4,500.00	$7,875.00
-Per Mile	1L5XX	$300.00	$260.00	$220.00	$350.00

(3) Collocation Transport—Transport Facilities between Collocation Arrangements

	USOC	1 Year	3 year	5 year	Mo. Ext.
-Fixed	1H48S	$13,000.00	$11,700.00	$10,400.00	$14,500.00
-Per Mile	1H48S	$260.00	$520.00	$440.00	$650.00

(4) Optional Features and Functions

(a) OC-48 Add/Drop Multiplexing—Per Arrangement*

USOC	1 Year	3 year	5 year	Mo. Ext.
MXRFX	$5,550.00	$4,625.00	$3,700.00	$6,375.00

(b) Add/Drop Function—Per OC-3

USOC	Monthly	Nonrecurring Charge
MXJEX	$625.00	$0

* Concatenated services cannot be multiplexed. (N)

(This page filed under Transmittal No. 43)

ACCESS SERVICE

22. Metropolitan Statistical Area Access Services (Cont'd) (N)

22.5 Rates and Charges (Cont'd)

22.5.2 Special Access Service (Cont'd)

22.5.2.10 Optical Carrier Network (OCN) Point-to-Point Service (Cont'd)

(C) OC-48/OC-48c (Cont'd)

	USOC	Monthly	Nonrecurring Charge
(4) Optional Features and Functions (Cont'd)			
(b) Add/Drop Function (Cont'd)			
-Per OC-3	MXJCX	$250.00	$0
-Per DS3	MXJBX	$150.00	$0
(c) 1+1 Protection -Per OC-48/OC-48c Local Distribution Channel	P8T	$1,410.00	$0
(d) 1+1 Protection with Cable Survivability -Per OC-48/OC-48c Local Distribution Channel	P3S	$1,410.00	$700.00
(e) 1+1 Protection with Route Survivability -Per OC-48/OC-48c Local Distribution Channel	P8T	(Apply P8T rate above, plus Per Quarter Route Mile below) (P8T + S2DXY)	
-Per Quarter Route Mile	S2DXY	$125.00	$0

(N)

(This page filed under Transmittal No. 43)

22. Metropolitan Statistical Area Access Services (Cont'd) (N)

22.5 Rates and Charges (Cont'd)

22.5.2 Special Access Service (Cont'd)

22.5.2.10 Optical Carrier Network (OCN) Point-to-Point Service (Cont'd)

(C) OC-48/OC-48c (Cont'd)

	USOC	Monthly	Nonrecurring Charge
(4) Optional Features and Functions (Cont'd)			
(f) Point-to-Point OC-48 Regenerator -each	RGY48	$5,500.00	$0
(g) Shared Network Arrangement -Processing Charge per Service Order	NRBOP	$0	$30.00

(5) Moves (OC-48/OC-48c)

(a) Service Rearrangement

See Section 7.2.2, preceding for rates and charges.

(b) Moves of Point of Termination

See Section 7.2.3, preceding for rates and charges.

(c) Moving Customer Premises

See Section 7.2.3, preceding for rates and charges. (N)

(This page filed under Transmittal No. 43)

22. Metropolitan Statistical Area Access Services (Cont'd) (N)

22.5 Rates and Charges (Cont'd)

22.5.2 Special Access Service (Cont'd)

22.5.2.10 Optical Carrier Network (OCN) Point-to-Point Service (Cont'd)

(D) OC-192

	USOC	3 year	5 year	Mo. Ext.
(1) Local Distribution Channel -Per Point of Termination	TMECS	$29,400.00	$21,000.00	$36,000.00
(2) Interoffice Transport -Mileage -Fixed	1L5XX	$16,875.00	$13,500.00	$23,625.00
-Per Mile	1L5XX	$360.00	$300.00	$450.00
(3) Collocation Transport -Transport Facilities between Collocation Arrangements -Fixed	1H48S	$16,875.00	$13,500.00	$23,625.00
-Per Mile	1H48S	$360.00	$300.00	$450.00
(4) Optional Features and Functions				
(a) OC-192 Add/Drop Multiplexing* -Per Arrangement	MXRGX	$12,000.00	$9,600.00	$16,800.00

	USOC	Monthly	Nonrecurring Charge
(b) Add/Drop Function -per OC-48	MXJFX	$1,800.00	$0

(N)

*Concatenated services cannot be multiplexed.

(This page filed under Transmittal No. 43)

ACCESS SERVICE

22. Metropolitan Statistical Area Access Services (Cont'd)

22.5 Rates and Charges (Cont'd)

22.5.2 Special Access Service (Cont'd)

22.5.2.10 Optical Carrier Network (OCN) Point-to-Point Service (Cont'd)

(D) OC-192 (Cont'd)

	USOC	Monthly	Nonrecurring Charge	
(4) Optional Feature and Functions (Cont'd)				
(b) Add/Drop Function (Cont'd)				
-Per OC-12	MXJEX	$625.00	$0	
-Per OC-3	MXJCX	$250.00	$0	
(c) 1+1 Protection -Per OC-192 Local Distribution Channel	P8T	$2,700.00	$0	(N)
(d) 1+1 Protection with Cable Survivability -Per OC-192 Local Distribution Channel	P3S	$2,700.00	$800.00	
(e) 1+1 Protection with Route Survivability -Per OC-192 Local Distribution Channel	P8Tplus	(Apply P8T rate above, Per Quarter Route Mile below) (P8T + S2DXY)		
-Per Quarter Route Mile	S2DXY	$150.00	$0	(N)
(f) Point-to-Point OC-192 Regenerator				(T)
-each	RGY	$11,000.00	$0	

Material previously appearing on this page now appears on 1st Revised Page 22-44.

(This page filed under Transmittal No. 47)

22. Metropolitan Statistical Area Access Services (Cont'd)

22.5 Rates and Charges (Cont'd)

22.5.2 Special Access Service (Cont'd)

22.5.2.10 Optical Carrier Network (OCN) Point-to-Point Service (Cont'd)

(D) OC-192 (Cont'd) (M)

(5) Moves (OC-192)

(a) Service Rearrangement

See Section 7.2.2, preceding for rates and charges.

(b) Moves of Point of Termination

See Section 7.2.3, preceding for rates and charges.

(c) Moving Customer Premises

See Section 7.2.3, preceding for rates and charges. (M)

(E) Installation and Rearrangement Charges

USOC	Administrative Charge, per Order	Design and Central Office Connection Charge, per circuit	Customer Connection, Charge, per termination
	ORCMX	NRBCL	NRBBL
OC-3/OC-3c	$60.00	$ 375.00	$450.00
OC-12/OC-12c	60.00	375.00	450.00
OC-48/OC-48c	60.00	500.00	600.00
OC-192	60.00	2,250.00	600.00

Certain material appearing on this page previously appeared on Original Page 22-43.

22. Metropolitan Statistical Area Access Services (Cont'd) (N)

22.5 Rates and Charges (Cont'd)

22.5.2 Special Access Service (Cont'd)

22.5.2.11 Fractional DS1 Service - 128, 256, 384, 512, and 768 Kbps

(A) Channel Termination
- Per Point of Termination TMECS

	Recurring Charges	Nonrecurring Charges 1st CKT	Addl CKT
MTM	$150.00	$900.00	$900.00
3 Year	$115.00	$900.00	$900.00
5 Year	$105.00	$900.00	$900.00

(B) Channel Mileage
- Fixed

USOC	MTM	3 Year	5 Year
1L5XX	$50.00	$39.00	$34.00

Channel Mileage
- Per Mile

USOC	MTM	3 Year	5 Year
1L5XX	$10.00	$9.00	$8.25

(N)

(This page filed under Transmittal No. 63)

ACCESS SERVICE

22. Metropolitan Statistical Area Access Service (Cont'd) (N)

22.6 Nevada Bell Wire Center Information

22.6.1 MSAs with Limited Service Relief

State	Wire Center CLLI	MSA Name
NB	EMPRNV11	RENO
NB	INVGNV11	RENO
NB	LCWDNV11	RENO
NB	RENONV02	RENO
NB	RENONV12	RENO
NB	RENONV13	RENO
NB	RENONV14	RENO
NB	RENONV15	RENO
NB	SNVYNV11	RENO
NB	SPRKNV11	RENO
NB	SPRKNV12	RENO
NB	STEDNV11	RENO
NB	VERDNV11	RENO
NB	WASONV11	RENO (N)

(This page filed under Transmittal No. 43)

23. Pricing Flexibility Contract Offerings (N)

23.1 Contract Offer No. 1 – Wireless Advantage Managed Services Value Incentive Plan (WAMS-VIP) Offer

23.1.1 General Description

Wireless Advantage Managed Services Value Incentive Plan (WAMS-VIP) Offer (Contract Offer No. 1) is an access discount plan that provides Customers with Incentive Discounts and Portability Incentives (as defined in Section 23.1.4) in accordance with the terms and conditions as set forth in this Section 23.1.3.

23.1.2 Services Available For WAMS-VIP Offer

(A) Contract Offer No. 1 applies to qualified access services contained in Nevada Bell Telephone Company Tariff F.C.C. No. 1 (Qualified Access Services), listed in Table A below:

Table A

Service	General Basic Description	Rates and Charges	
High Capacity Service	7.11.1	7.11.5	22.5.2.5
Broadband Circuit Service (BCS)	20.1	20.2	22.5.2.9
Optical Carrier Network (OCN) Point-to-Point Service	21.1	21.3	22.5.2.10
Gigabit Ethernet Metropolitan Area Network (GigaMAN)	7.13.1	7.13.3	22.5.2.7
Multi-service Optical Network (MON) Ring Service	8.1	8.4	22.5.2.8

(B) When additional Qualified Access Services are added to the services available under F.C.C. No. 1, all billed, recurring revenues for such additional Qualified Access Services will be added to this Contract Offer No. 1 for the purposes of calculating the Incentive Discounts and Portability Incentives included in this Contract Offer No. 1. (N)

(N)

23. Pricing Flexibility Contract Offerings (Cont'd)

23.1 Contract Offer No. 1 – Wireless Advantage Managed Services Value Incentive Plan (WAMS-VIP) Offer (Cont'd)

23.1.2 Services Available Under WAMS-VIP Offer (Cont'd)

(C) All terms and conditions for the Qualified Access Services are governed by the respective tariff sections, except as noted in this Contract Offer No. 1.

23.1.3 WAMS-VIP Offer Terms and Conditions

The following terms and conditions apply to Contract Offer No. 1:

(A) Eligibility Criteria

(1) The Qualified Access Services must be located within the "Operating Territory" of the Telephone Company, as described in F.C.C. No. 1, Section 17 (Operating Territory);

(2) Incentive Discounts earned by the Customer under Contract Offer No. 1 shall be applied in the form of a credit to the Customer's bill(s) for Qualified Access Services, located in the following MSA(s) where Telephone Company has been granted pricing flexibility: Reno, Nevada; and

(3) All traffic on the Qualified Access Service(s) must originate or terminate on a wireless carrier's network.

(N)

(This page filed under Transmittal No. 75)

(N)

23. Pricing Flexibility Contract Offerings (Cont'd)

23.1 Contract Offer No. 1 – Wireless Advantage Managed Services Value Incentive Plan (WAMS-VIP) Offer (Cont'd)

23.1.3 WAMS-VIP Offer Terms and Conditions (Cont'd)

(B) Terms and Conditions

(1) Revenue commitments are based on billed, recurring charges for the Qualified Access Services and specifically exclude any non-recurring charges and Incentive Discounts earned under this Contract Offer No. 1;

(2) Customer must maintain a Baseline Minimum Annual Revenue Commitment of $1,176,000 (Baseline MARC) for Qualified Access Services;

(3) Contract Offer No. 1 Incentive Discounts and Portability Incentives are in addition to, and do not alter, any of the existing service discount/term plans available in the Telephone Company's respective tariffs;

(4) The Telephone Company reserves the right to change rates for Qualified Access Services included under Contract Offer No. 1. In the event such rate modifications are made no change will be made to the Baseline MARC;

(5) Qualified Access Services are subject to certain rates, charges and general terms and conditions in other sections of F.C.C. Tariff No. 1 (Sections 2-General Regulations, 5-Ordering Options for Switched & Special Access Service, and 13-Additional Engineering, Additional Labor & Miscellaneous Services) and such terms and conditions may be modified through the filing of tariff changes at any time during the Term Period. Such tariff modifications will not change the terms and conditions described in Contract Offer No. 1;

(6) This Contract Offer No. 1 is available October 9, 2004 through November 9, 2004;

(N)

23. Pricing Flexibility Contract Offerings (Cont'd) (N)

23.1 Contract Offer No. 1 – Wireless Advantage Managed Services Value Incentive Plan (WAMS-VIP) Offer (Cont'd)

23.1.3 WAMS-VIP Offer Terms and Conditions (Cont'd)

(B) Terms and Conditions (Cont'd)

(7) The Customer must meet the criteria described for Incentive Discounts and Portability Incentives, as provided in Section 23.1.4; and

(8) To subscribe to Contract Offer No. 1, the Customer must submit a Letter of Subscription (LOS) to the Telephone Company. The LOS shall contain the effective date ("Effective Date") and the Access Customer's Name Abbreviation(s) (ACNA) and must be signed by the Customer and the Telephone Company's representative.

(C) Term Period

The contract term (Term Period) is eighty-four (84) months commencing on the Effective Date. Each twelve (12) month period beginning with the Effective Date shall be a Term Year. At the end of the Term Period, the Incentive Discounts and Portability Incentives provided in this Contract Offer No. 1 shall be discontinued. This offer is not renewable. (N)

(This page filed under Transmittal No. 75)

23. Pricing Flexibility Contract Offerings (Cont'd) (N)

23.1 Contract Offer No. 1 – Wireless Advantage Managed Services Value Incentive Plan (WAMS-VIP) Offer (Cont'd)

23.1.4 WAMS-VIP Offer Incentive Discounts

Customer will be eligible for the following Incentive Discounts and/or Portability Incentives (collectively "Incentives") under Contract Offer No. 1 during each of the Term Years:

Incentive Discount Commitment Credit (IDCC),
Incentive Discount for WinBack Services (WinBack Incentive), and
Portability Incentive for DS3s (Portability Incentive).

(A) Incentive Discount Commitment

In order to qualify for the IDCC and Portability Incentives, Customer must maintain the "Incentive Discount Commitment" (IDC):

(1) Establishment of the IDC
(a) For Term Year one (1) the Customer's IDC will equal the Baseline MARC.
(b) Unless and until Customer elects to increase the IDC, as provided in Section 23.1.4(A)(1)(c), the IDC during Term Years two (2) through seven (7) shall remain the Baseline MARC.
(c) Customer may elect, by providing written notice to Telephone Company, to increase the IDC. Customer shall notify the Telephone Company of the new IDC Level, as provided in Table B in Section 23.1.4(B). The Customer may increase the IDC Level only; the IDC Level may not be decreased. An IDC Level may be increased effective at the beginning of each Term Year, after the first Term Year, and after the first six (6) months of each Term Year (New IDC Date). Each time Customer chooses a new IDC Level, the corresponding IDC and IDCC shall apply as of the New IDC Date and for the remainder of the Term Period, unless Customer further increases the IDC as provided in this section.

(2) Application of Incentive Discount Commitment
If during the Annual True-Up, as defined in Section 23.1.5(A), the Customer's Achieved Revenue Amount meets or exceeds the IDC, the Telephone Company will apply the IDCC and Portability Incentives for the following Term Year, provided the criteria in Section 23.1.4(B) and (E)respectively, are met. During the first Term Year, the Telephone Company will apply the IDCC based upon IDC Level 1.

(This page filed under Transmittal No. 75)

(N)

23. Pricing Flexibility Contract Offerings (Cont'd)

23.1 Contract Offer No. 1 – Wireless Advantage Managed Services Value Incentive Plan (WAMS-VIP) Offer (Cont'd)

23.1.4 WAMS-VIP Offer Incentive Discounts (Cont'd)

(A) Incentive Discount Commitment (Cont'd)

(2) Application of Incentive Discount Commitment (Cont'd)

Example: After Term Year one (1), the Customer's Achieved Revenue Amount, determined by the Annual True-Up, equals $1,900,000 and the IDC is $1,176,000. Since the Achieved Revenue Amount exceeds the IDC and the Customer has not provided notice to increase the IDC to a new IDC Level, the Telephone Company would apply the IDCC, and Portability Incentives in Term Year two (2), based on the Customer's IDC of $1,176,000.

(3) Notwithstanding the above, Incentives shall not be applied unless and until the Customer is current in paying (or properly disputing) all invoices submitted for payment by the Telephone Company for billed, recurring revenue for Qualified Access Services in accordance with F.C.C. No. 1, Section 2.

(B) Incentive Discount Commitment Credit for Qualified Access Services

For each Term Year, the Customer will be eligible for an "Incentive Discount Commitment Credit" (IDCC) according to Table B, per sub-section (1) below.

Table B

IDC Level	IDC	IDCC
1	$ 1,176,000	$ 105,840
2	$ 1,296,000	$ 129,600
3	$ 1,416,000	$ 169,920
4	$ 1,536,000	$ 215,040
5	$ 1,656,000	$ 248,400
6	$ 1,776,000	$ 301,920
7	$ 1,896,000	$ 379,200

(N)

(This page filed under Transmittal No. 75)

23. Pricing Flexibility Contract Offerings (Cont'd) (N)

23.1 Contract Offer No. 1 – Wireless Advantage Managed Services Value Incentive Plan (WAMS-VIP) Offer (Cont'd)

23.1.4 WAMS-VIP Offer Incentive Discounts (Cont'd)

(B) Incentive Discount Commitment Credit for Qualified Access Services (Cont'd)

(1) Application of Incentive Discount Commitment Credit

(a) The Telephone Company will apply the IDCC to the Customer's bill(s) for Qualified Access Services in those Term Years for which the Customer qualifies for the IDCC per Section 23.1.4(A),as follows: One-quarter of the IDCC will be applied thirty (30) days in arrears from the end of the first, second, third and fourth quarters of the Term Year, based on the IDCC determined under Section 23.1.4(B)(1)(b)and 23.1.4(B)(1)(c) below.

(b) The IDCC applied during the four (4)quarters of Term Year one (1) shall be based upon IDC-Level 1.

(c) The IDCC applied during the four (4) quarters for Term Years two (2) through seven (7) will be based upon the IDC-Level determined using the IDC established in Section 23.1.4(A). (N)

(This page filed under Transmittal No. 75)

23. Pricing Flexibility Contract Offerings (Cont'd) (N)

23.1 Contract Offer No. 1 – Wireless Advantage Managed Services Value Incentive Plan (WAMS-VIP) Offer (Cont'd)

23.1.4 WAMS-VIP Offer Incentive Discounts (Cont'd)

(C) Incentive Discount for WinBack Services

If the Customer elects to obtain Qualified Access Service(s) located in MSAs where the Telephone Company has been granted pricing flexibility within the Operating Territory, in place of access service(s) that is provided by a carrier other than the Telephone Company or one of its affiliates, the Customer will receive a one-time credit equal to twenty percent (20%) of the first twelve (12) months billed, recurring revenue for that new Qualified Access Service (WinBack Incentive).

This WinBack Incentive credit will be applied in addition to the Incentives described in Sections 23.1.4(B)and(D).

(1) Eligibility Criteria for WinBack Incentive

(a) The Customer must present reasonable and verifiable information, which includes but is not limited to circuit detail or coordinated move orders, to demonstrate the service being converted is currently being provided by a carrier other than the Telephone Company or its affiliates; and

(b) The new Qualified Access Service(s) ordered must have a minimum term period of twelve (12) months for DS1 and DS3 orders and thirty-six (36) months for SONET services.

(N)

(This page filed under Transmittal No. 75)

(N)

23. Pricing Flexibility Contract Offerings (Cont'd)

23.1 Contract Offer No. 1 – Wireless Advantage Managed Services Value Incentive Plan (WAMS-VIP) Offer (Cont'd)

23.1.4 WAMS-VIP Offer Incentive Discounts (Cont'd)

(C) Incentive Discount for WinBack Services (Cont'd)

(2) Application of WinBack Incentive

(a) The Telephone Company will apply the credit to the Customer's bill(s) for Qualified Access Services that follows the end of the initial twelve (12) month period, thirty (30) days in arrears, as follows:

(i) When the Telephone Company and Customer have identified the start date for the term period of the WinBack Qualified Access Service in a authorization letter, the initial twelve (12) month period will be the twelve (12) month period commencing on that start date; or,

(ii) When the start date for the term period of the WinBack Qualified Access Service is established by the completion of an access service order, the initial twelve (12) month period will be the twelve (12) month period commencing on the day the access service order is completed.

(N)

(This page filed under Transmittal No. 75)

(N)

23. Pricing Flexibility Contract Offerings (Cont'd)

23.1 Contract Offer No. 1 – Wireless Advantage Managed Services Value Incentive Plan (WAMS-VIP) Offer (Cont'd)

23.1.4 WAMS-VIP Offer Incentive Discounts (Cont'd)

(D) DS3 Portability Incentive

The Portability Incentive waives termination liability charges that would otherwise be assessed to the Customer for moves of DS3 Qualified Access Services.

This Portability Incentive is in addition to the Incentives described in Sections 23.1.4(B) and (C).

(1) Eligibility Criteria for DS3 Portability Incentive

The following criteria must be met in order to receive the Portability Incentive:

(a) Customer's DS3s must meet the Minimum Period requirements, as established under F.C.C. No. 1, Section 7.2.4 at the previous location;
(b) The term period of the new circuit must be equal to, or greater than, the remaining term of the disconnected circuit; and
(c) The disconnect service and new service must be within the Operating Territory.

(2) Semi-Annual Review of Disconnect Access Service Orders

If Customer qualified for the Portability Incentive as set forth in Section 23.1.4(A) but cumulative "disconnect" access service orders exceeded "add" access service orders during the Term Year, as measured on a semi-annual basis, the Customer will be assessed termination liability charges on the sum difference between the cumulative disconnect and add access service orders.

(N)

(N)

23. Pricing Flexibility Contract Offerings (Cont'd)

23.1 Contract Offer No. 1 – Wireless Advantage Managed Services Value Incentive Plan (WAMS-VIP) Offer (Cont'd)

23.1.5 WAMS-VIP Annual True-Up

(A) An annual true-up calculation is performed after each Term Year ("Annual True-Up") to establish whether:

(1) Customer maintained the Baseline MARC during that Term Year; and

(2) Customer met or exceeded the IDC.

For the purposes of the Annual True-Up calculations, the Customer's billed, recurring revenue for Qualified Access Services during the Term Year will constitute the Customer's "Achieved Revenue Amount."

(B) Annual True-Up Calculations

(1) Baseline MARC Annual True-Up:

The Telephone Company will determine whether the Customer's Achieved Revenue Amount meets, exceeds or falls below the Baseline MARC.

(a) If Customer's Achieved Revenue Amount falls below the Baseline MARC, the Customer may pay the difference between the Baseline MARC and the Achieved Revenue Amount (Shortfall Payment).

(i) The Telephone Company will notify the Customer within thirty (30) days of the end of the Term Year of any Shortfall Payment.

(ii) Customer must make the Shortfall Payment within thirty (30) days after receiving notification from the Telephone Company.

(iii) The following Term Year's IDC and IDCC will be determined as set forth in Section 23.1.4(A)and(B).

(N)

(N)

23. Pricing Flexibility Contract Offerings (Cont'd)

23.1 Contract Offer No. 1 – Wireless Advantage Managed Services Value Incentive Plan (WAMS-VIP) Offer (Cont'd)

23.1.5 WAMS-VIP Annual True-Up (Cont'd)

(B) Annual True-Up Calculations (Cont'd)

(1) Baseline MARC Annual True-Up: (Cont'd)

Example of Baseline MARC Annual True-Up:

If Customer's Achieved Revenue Amount in Term Year 5 is $1,000,000, the Baseline MARC of $1,176,000 has not been met. Customer may choose to pay the difference of $176,000 (1,176,000 – 1,000,000), in order to avoid termination liability charges.

(b) If Customer's Achieved Revenue Amount falls below the Baseline MARC for any given Term Year, and the Customer does not make the Shortfall Payment, this Contract Offer Subscription shall terminate and termination liability charges will apply, as described in Section 23.1.8(A).

(N)

(N)

23. Pricing Flexibility Contract Offerings (Cont'd)

23.1 Contract Offer No. 1 – Wireless Advantage Managed Services Value Incentive Plan (WAMS-VIP) Offer (Cont'd)

23.1.5 WAMS-VIP Annual True-Up (Cont'd)

(B) The Annual True-Up Calculation (Cont'd)

(2) IDCC Annual True-Up:

The Telephone Company will determine whether the Customer's Achieved Revenue Amount meets, exceeds or falls below the IDC.

(a) If the Customer's Achieved Revenue Amount meets or exceeds the IDC, the Telephone Company will determine the IDCC for the following Term Year and the quarterly credits, for that following Term Year, will be applied as set forth in Section 23.1.4(B)(1).

(b) If the Customer's Achieved Revenue Amount falls below the IDC, the Customer may pay the difference between the Achieved Revenue Amount and the IDC ("Make-Up Payment") to be eligible for IDCC for the following Term Year as detailed below.

(i) The Telephone Company shall notify the Customer within thirty (30) days of the end of the Term Year of any Make-Up Payment.

(ii) Customer must pay the Make-Up Payment within thirty (30) days after receiving said notification from the Telephone Company.

(iii) The following Term Year's IDCC will be determined as set forth in Section 23.1.4(B).

(iv) If the Customer chooses not to make the Make-Up Payment, no IDCC payments will be made to the Customer for the following Term Year.

Example of IDCC Annual True-Up:

If the Achieved Revenue Amount for Term Year 3 is $1,500,000 and the IDC is $1,296,000 the Earned IDCC for Term Year 4 would be $129,600, unless the Customer increased the applicable IDC as provided in Section 23.1.4(A). (N)

(This page filed under Transmittal No. 75)

23. Pricing Flexibility Contract Offerings (Cont'd) (N)

23.1 Contract Offer No. 1 – Wireless Advantage Managed Services Value Incentive Plan (WAMS-VIP) Offer (Cont'd)

23.1.6 WAMS-VIP Offer Merger/Acquisitions

(A) Assignment/Successors

(1) If the Customer wishes to assign or transfer its rights and obligations under Contract Offer No. 1 ("Contract Offer Subscription"), the Telephone Company will permit such transfer or assignment if the criteria in F.C.C. No. 1 Sections 2.1.2 are fulfilled, unless the proposed assignee or transferee demonstrates a lack of credit worthiness under any of the criteria in (a), (b) or (c) below, or if the assignee or transferee or its parent, has commenced or had initiated against it a voluntary receivership or bankruptcy proceeding.

(a) Any debt of the proposed assignee or transferee or its parent (defined as an entity that owns directly or indirectly more than 50% of the equity of the proposed assignee or transferee) are rated below investment grade as defined by the Securities and Exchange Commission or;

(b) If any debt securities of a proposed assignee or transferee or its parent are rated the lowest investment grade and have been placed on review by a rating organization for a possible downgrade or;

(c) The proposed assignee or transferee does not have any outstanding securities rated by credit rating agencies (e.g., Standard and Poor's) but does have a Dun and Bradstreet rating and the proposed assignee or transferee is rated:

(i) Fair or below in a composite credit appraisal published by Dun and Bradstreet or;

(ii) High risk in a Paydex score as published by Dun and Bradstreet. (N)

23. Pricing Flexibility Contract Offerings (Cont'd) (N)

23.1 Contract Offer No. 1 – Wireless Advantage Managed Services Value Incentive Plan (WAMS-VIP) Offer (Cont'd)

23.1.6 WAMS-VIP Offer Merger/Acquisitions (Cont'd)

(A) Assignment/Successors (Cont'd)

(2) The terms and conditions of the Contract Offer No. 1 shall continue in full force and effect if the Customer merges with, acquires, is acquired by, or sells all or substantially all its stock or assets to any other entity (Transfer). After a Transfer, if the other entity also purchases Qualified Access Service(s) from the Telephone Company, either directly or through any affiliates, the Customer shall not include under the Contract Offer Subscription any of the billed, recurring revenue for the Qualified Access Services of the other entity in place as of the date the Transfer is finalized (Transfer Date), except as may be provided below.

Notwithstanding the foregoing, the Customer may choose, at its discretion, one of the options set forth in subsections (i)-(iii) below (Options), within the time period that is between twelve (12) months and twenty-four (24) months after the Transfer Date.

To exercise an Option, the Customer must send written notice to the Telephone Company within the time period described above stating which Option the Customer selects. The date that the Customer sends that written notice shall be the "Option Exercise Date". None of the Options shall alter in any way the terms or conditions of any contract or tariff pursuant to which the other entity obtains Qualified Access Services from the Telephone Company, including but not limited to any terms or conditions related to termination.

Option (i): The Customer and Telephone Company shall recalculate the Baseline MARC, IDC and IDCCs (Key Numbers) for the period from the Option Exercise Date to the end of the Term Period, to allow for the combined billed, recurring revenues for Qualified Access Services of the Customer and the merged or acquiring company to be covered under the Contract Offer Subscription, provided the following conditions are met: (N)

(This page filed under Transmittal No. 75)

23. Pricing Flexibility Contract Offerings (Cont'd) (N)

23.1 Contract Offer No. 1 – Wireless Advantage Managed Services Value Incentive Plan (WAMS-VIP) Offer (Cont'd)

23.1.6 WAMS-VIP Offer Mergers/Acquisitions (Cont'd)

(A) Assignment/Successors (Cont'd)

(2) (Cont'd)

Option (i): (Cont'd)

(a) One hundred percent (100%) of the total combined billed, recurring revenues for Qualified Access Services of Customer and the other entity must be included in the Contract Offer Subscription;

(b) The Baseline MARC will be adjusted according to the following formula:

The Baseline MARC will be equal to one hundred percent (100%) of the other entity's billed, recurring revenues for Qualified Access Services for the three (3) months immediately preceding the Option Exercise Date multiplied by four (4) plus 1,176,000. This shall be the "Combined Baseline MARC";

(c) The IDC for the remainder of the then-current Term Year will be adjusted according to the following formula:

The IDC will be equal to one hundred percent (100%) of the other entity's actual billed recurring Qualified Access Services revenues for the three months immediately preceding the Option Exercise Date multiplied by four (4) plus the Customer's current IDC. This shall be the "Combined IDC"; (N)

(This page filed under Transmittal No. 75)

23. Pricing Flexibility Contract Offerings (Cont'd) (N)

23.1 Contract Offer No. 1 – Wireless Advantage Managed Services Value Incentive Plan (WAMS-VIP) Offer (Cont'd)

23.1.6 WAMS-VIP Offer Mergers/Acquisitions (Cont'd)

(A) Assignment/Successors (Cont'd)

Option (i): (Cont'd)

(d) The IDC will be adjusted according to the following formula:

The Option 1 multiplier ("Option 1 Multiplier"), which equals the ratio of the Combined IDC to the Customer's current IDC, will be applied to the IDCCs associated with the IDC Levels that are available to the Customer, as defined in Section 23.1.4.

Example:
IDC = $1,416,000
Current IDCC Level = 3

New Entity Revenue = $1,000,000

Combined IDC = $2,416,000
($1,416,000 plus $1,000,000)

Option 1 Multiplier = 1.71
($2,416,000/$1,416,000)

(e) The IDCCs amounts will be adjusted according to the following formula:

The Option 1 Multiplier will be applied to the IDCC associated with the IDCC Levels which remain available to the Customer in order to determine the Combined IDCC.

Example:
IDC = $1,416,000
Current IDC-Level = 3
IDCC = $169,920

New Entity Revenue = $1,000,000
Combined IDC = $2,416,000
($1,416,000 plus $1,000,000)

Option 1 Multiplier = 1.71
(1,416,000/$1,000,000)

(N)

Combined IDCC = $290,563
($169,920 multiplied by 1.71)

(This page filed under Transmittal No. 75)

23. Pricing Flexibility Contract Offerings (Cont'd) (N)

23.1 Contract Offer No. 1 – Wireless Advantage Managed Services Value Incentive Plan (WAMS-VIP) Offer (Cont'd)

23.1.6 WAMS-VIP Offer Mergers/Acquisitions (Cont'd)

(A) Assignment/Successors (Cont'd)

(2) (Cont'd)

Option (i): (Cont'd)

(f) The Customer must have at least forty-eight (48) months remaining in the Term Period under the Contract Offer Subscription or, if less than forty-eight (48) months are remaining in the Term Period under the Contract Offer Subscription, the Term Period shall be automatically extended so that the terms and conditions of the Contract Offer No. 1 remain in effect for forty-eight (48) months after the Option Exercise Date; and

(g) The Telephone Company will recalculate the Key Numbers within sixty (60) days of the Option Exercise Date with no credits being applied to the Customer's bill(s) during this sixty (60) day period. Starting with the remaining quarters, the combined Key Numbers will be used to determine applicable IDCC amounts.

(1) If the Option Exercise Date falls within the 1st, 2nd or 3rd quarter of the respective Term Year, the initial credit application of any eligible Combined IDCC will occur thirty (30) days after the Key Numbers are determined or thirty (30) days in arrears of the end of the quarter, whichever is later; or

(2) If the Option Exercise Date falls within the fourth quarter of the respective Term Year, the initial credit application of any eligible Combined IDCC will occur thirty (30) days after the Key Numbers are determined or sixty (60) days in arrears of the end of the quarter, whichever is later.

Option (ii): The Customer and Telephone Company shall endeavor to negotiate new Key Numbers for the period from the Option Exercise Date to the end of the Term Period, to allow for the combination of the billed, recurring revenues for Qualified Access Services of the Customer and the merged or acquiring company to be covered under this Contract Offer Subscription provided the following conditions are met: (N)

(This page filed under Transmittal No. 75)

23. Pricing Flexibility Contract Offerings (Cont'd) (N)

23.1 Contract Offer No. 1 – Wireless Advantage Managed Services Value Incentive Plan (WAMS-VIP) Offer (Cont'd)

23.1.6 WAMS-VIP Offer Mergers/Acquisitions (Cont'd)

(A) Assignment/Successors (Cont'd)

(2) (Cont'd)

Option (ii): (Cont'd)

(a) The Customer and Telephone Company shall each identify a team (composed of business and network subject matter experts) which shall negotiate new Key Numbers in good faith;

(b) If these discussions do not result in mutual agreement on new Key Numbers within sixty (60) days of the date of the Option Exercise Date, either Customer or Telephone Company may provide written notice to the other requesting that each party appoint a knowledgeable, responsible representative(s) to meet and negotiate in good faith to agree upon new Key Numbers. The Customer and Telephone Company intend that these negotiations be conducted by non-lawyer, business representatives. The location, form, frequency, duration and conclusion of these discussions shall be left to the discretion of the representatives;

(c) The Customer and Telephone Company shall endeavor to reach agreement upon the new Key Numbers within one hundred twenty (120) days of the Option Exercise Date; and

(d) If the Customer and Telephone Company cannot mutually agree upon new Key Numbers within timelines outlined above, and the Customer does not wish to continue according to the rates terms and conditions of this Contract Offer Subscription, the Customer may terminate the Contract Offer Subscription by giving thirty (30) days written notice to the Telephone Company. Upon such termination, the Telephone Company shall bill the Customer, and the Customer shall pay to the Telephone Company, termination liability charges as described below: (N)

(This page filed under Transmittal No. 75)

(N)

23. Pricing Flexibility Contract Offerings (Cont'd)

23.1 Contract Offer No. 1 – Wireless Advantage Managed Services Value Incentive Plan (WAMS-VIP) Offer (Cont'd)

23.1.6 WAMS-VIP Offer Mergers/Acquisitions (Cont'd)

(A) Assignment/Successors (Cont'd)

(2) (Cont'd)

Option (ii): (Cont'd)

(d)(Cont'd)

(a) For termination that occurs between twelve (12)and twenty-four (24) months after the effective Date, eighty percent (80%) of all IDCC provided to the Customer pursuant to this Contract Offer No. 1; or

(b) For termination that occurs after the first twenty-four (24) months after the Effective Date, fifty percent (50%) of all IDCC provided to the Customer pursuant to this Contract Offer No. 1.

Option (iii): The Contract Offer Subscription shall be terminated as set forth in Section 23.1.8(A).

(N)

(N)

23. Pricing Flexibility Contract Offerings (Cont'd)

23.1 Contract Offer No. 1 – Wireless Advantage Managed Services Value Incentive Plan (WAMS-VIP) Offer (Cont'd)

23.1.6 WAMS-VIP Offer Mergers/Acquisitions (Cont'd)

(B) Sale of Markets

If Customer is required by a regulatory agency to divest any markets, market spectrum or customers ("Divested Market") in connection with a Transfer, the Customer can request that Key Numbers be recalculated by the Telephone Company. The Customer must send written notice to the Telephone Company within sixty (60) days of completing a market divestiture. The date the Customer sends that written notice shall be the "Divestiture Notice Date". The Telephone Company will recalculate the Key Numbers as described below:

(1) The Baseline MARC, IDC and IDCC amounts will be reduced by either of the following methods, at the Customer's discretion ("Divested Revenue"):

(a) One hundred percent (100%) of the Divested Market's billed, recurring revenues for Qualified Access Services for the three (3) months immediately preceding the notification multiplied by four (4); or

(b) A revenue amount that is less than the amount determined under subparagraph (a) above.

(N)

(N)

23. Pricing Flexibility Contract Offerings (Cont'd)

23.1 Contract Offer No. 1 – Wireless Advantage Managed Services Value Incentive Plan (WAMS-VIP) Offer (Cont'd)

23.1.6 WAMS-VIP Offer Mergers/Acquisitions (Cont'd)

(B) Sale of Markets(Cont'd)

(2)The IDCCs will be reduced according to the following steps:

Step 1.
Determine the impact on total revenue by calculating the "Divestiture Percentage". The Divestiture Percentage is the percent change between the Pre-Divest and Post-Divest revenues. The "Pre-Divest Revenue" equals 100% of the Customer's billed, recurring revenues for Qualified Access Services for the three (3) months immediately preceding the Divestiture Notice Date multiplied by four (4) or the Baseline MARC, whichever is greater. The "Post-Divest Revenue" equals Pre-Divest Revenue minus the Divested Revenue from (B)(1).

Example:
Pre-Divest Revenue = $1,700,000
Divested Revenue = $ 100,000
Post-Divest Revenue = $1,600,000
($1,700,000 - $100,000)

Divestiture Percentage = 6%
(1-($1,600,000/$1,700,000))

(N)

(This page filed under Transmittal No. 75)

(N)

23. Pricing Flexibility Contract Offerings (Cont'd)

23.1 Contract Offer No. 1 – Wireless Advantage Managed Services Value Incentive Plan (WAMS-VIP) Offer (Cont'd)

23.1.6 WAMS-VIP Offer Mergers/Acquisitions (Cont'd)

(B) Sale of Markets (Cont'd)

(2)(Cont'd)

Step 2.

The Divestiture Percentage will equal the percent reduction in the IDCs and IDCCs which remain available to the Customer.

Example:
IDCC-Level equals 5
Divestiture % = 6%

Reduced IDC = $1,598,000
($1,700,000 – ($1,700,000 X .06))

Reduced IDCC = $233,496
($248,400 – ($248,400 X .06))

(3) The Telephone Company will recalculate the Key Numbers within sixty (60) days of the Divestiture Notice Date. The recalculated Key Numbers will become effective once the Divested Market's billed, recurring revenues for Qualified Access Service are no longer being billed to the Customer ("Divestiture Effective Date"). Starting with the remaining quarters of the Term Year as of the Divestiture Effective Date, the recalculated Key Numbers will be used to determine the applicable IDCC.

(a) If the Divestiture Effective Date falls within the 1st, 2nd or 3rd quarter of the respective Term Year, the initial credit application of any eligible Reduced IDCC will occur thirty (30) days after the Key Numbers are effective or thirty (30) days in arrears of the end of the quarter, whichever is later; or, (N)

(This page filed under Transmittal No. 75)

(N)

23. Pricing Flexibility Contract Offerings (Cont'd)

23.1 Contract Offer No. 1 – Wireless Advantage Managed Services Value Incentive Plan (WAMS-VIP) Offer (Cont'd)

23.1.6 WAMS-VIP Offer Mergers/Acquisitions (Cont'd)

(B) Sale of Markets (Cont'd)

(3) (Cont'd)

(b) If the Divestiture Effective Date falls within the fourth quarter of the respective Term Year, the initial credit application of any eligible reduced IDCC will occur thirty (30) days after the Key Numbers are determined or sixty (60) days in arrears of the end of the quarter, whichever is later.

23.1.7. WAMS-VIP Cell-Site Performance – Credits

(A) Description

Cell-Site Performance Improvement Credits are available to the Customer based upon the quality of service delivered during the Term Period, as set forth in subparagraph (2) below. The credits will be granted in the event that the Telephone Company's Contract Offer No. 1 service performance level objectives for cell-site DS1 Qualified Access Services are not met.

(1) The DS1 Qualified Access Services cell-site performance level parameters will be based on DS1 Percentage of Network Availability. The DS1 Percent of Network Availability will be calculated by determining the actual hours that the cell-site DS1 circuits are in service during a given month compared to the total expected availability, and then aggregating those total hours over the course of a Term Year.

Example:

If a Customer had 100 circuits in service at the end of January and 110 at the end of February, their total hours of expected availability would be (31 days times 100 circuits, times 24 hours) plus (28 days, times 110 circuits, times 24 hours) or 148,320. This would be the denominator of the network availability equation.

(N)

(N)

23. Pricing Flexibility Contract Offerings (Cont'd)

23.1 Contract Offer No. 1 – Wireless Advantage Managed Services Value Incentive Plan (WAMS-VIP) Offer (Cont'd)

23.1.7 WAMS-VIP Cell-Site Performance – Credits (Cont'd)

(A) Description (Cont'd)

(1) Example: (Cont'd)

The numerator would be the total hours of outage based upon measured tickets reported to the Telephone Company subtracted from the 148,320. If there were eight (8) reported failures averaging 3.5 hours per outage, the total hours of outage would be equal to twenty-eight (28). The resulting availability equation for those two (2) months will be ((148,320-28)/148,320) or 99.981%. A twelve (12) month aggregation using the same process as noted for two (2) months will be used to determine annual percent availability for a Customer.

(2) Table C below provides cell-site service performance targets, based on DS-1 Percentage of Network Availability, for each Term Year.

Table C

Term Year	% Network Availability
1	99.9800%
2	99.9840%
3	99.9877%
4	99.9900%
5	99.9900%
6	99.9900%
7	99.9900%

(B) At the Annual True-Up, if the Telephone Company annual results fail to meet the performance target, as specified in Table D above, and the Customer has met the Baseline MARC, the Telephone Company will provide credits and services as follows: (N)

(This page filed under Transmittal No. 75)

(N)

23. Pricing Flexibility Contract Offerings (Cont'd)

23.1 Contract Offer No. 1 – Wireless Advantage Managed Services Value Incentive Plan (WAMS-VIP) Offer (Cont'd)

23.1.7 WAMS-VIP Cell-Site Performance – Credits (Cont'd)

(B)(Cont'd)

(1) The Telephone Company will apply one hundred dollars ($100) in special construction credits for each measured trouble ticket reported to the Telephone Company during the Term Year for cell-site improvements. The special construction credits will be used to improve performance at mutually agreed upon Customer's cell sites that are performing below the DS-1 Percentage of Network Availability as specified in Table D above.

For example: special construction credits can be used to offset the cost of replacing copper with fiber at non-performing cell-sites; and,

(2) The Telephone Company will provide Customer the ability to purchase Automatic Loop Transfer service at twenty-five percent (25%) discount off the monthly recurring rates described in F.C.C. No. 1, Section 31.5.2 for those cell sites that fail to meet the performance target, as specified in Table D above.

23.1.8 Termination

The Customer's subscription to this Contract Offer No. 1 shall terminate if Customer gives notice to Telephone Company, as set forth in the following paragraph, and as set forth in other sections of this Contract Offer No. 1.

The termination liability charges described below shall apply if termination occurs because the Customer does not make a Shortfall Payment as described in Section 23.1.5(B)(1) and/or the Customer elects to terminate its subscription to Contract Offer No. 1 for reasons other than described in Section 23.1.6(A)(4) option(ii) and/or 23.1.8(B).

If the Customer elects to terminate its Contract Offer Subscription during the Term Period, written notification must be provided to the Telephone Company indicating the Customer's intention to terminate its Contract Offer Subscription. This notification must include the date upon which the Customer wishes to terminate its Contract Offer Subscription.

(N)

(This page filed under Transmittal No. 75)

(N)

23. Pricing Flexibility Contract Offerings (Cont'd)

23.1 Contract Offer No. 1 – Wireless Advantage Managed Services Value Incentive Plan (WAMS-VIP) Offer (Cont'd)

23.1.8 Termination (Cont'd)

(A) Termination Liability

Termination liability charges will consist of the sum of the following:

(1) Ten percent (10%) of the Baseline MARC divided by twelve (12)) then multiplied by the number of months remaining in the Term Period; plus
(2) Repayment of the IDCC, given under Contract Offer No. 1 during the three (3) quarters preceding the termination date.

Example:

Customer with a Baseline MARC of $1,176,000 and an IDC of $1,416,000 terminates its Contract Offer Subscription after forty-eight (48) months and with thirty-six (36) months remaining in the eighty-four (84) month Term Period, and the Customer received IDCC $127,440 for the previous three quarters before termination. The termination liability charges would be:

(($1,176,000/12) X 10% X 36) + ($127,440) = $480,240 termination liability charge.

(B) Rate Reductions

If the tariffed rates for the Qualified Access Services are reduced by a cumulative total of twenty percent (20%) from the tariffed rates in effect as of the Effective Date (Initial Tariff Rates), either party may terminate the Contract Offer Subscription by providing a sixty (60) day written notice to the other party. Termination liability charges will not apply.

(N)

(This page filed under Transmittal No. 75)

(N)

23. Pricing Flexibility Contract Offerings (Cont'd)

23.1 Contract Offer No. 1 – Wireless Advantage Managed Services Value Incentive Plan (WAMS-VIP) Offer (Cont'd)

23.1.8 Termination (Cont'd)

(B) Rate Reductions (Cont'd)

To determine whether the 20% rate reduction has been met or exceeded, the Telephone Company shall perform an analysis within sixty (60) days following the Effective Date that details the Customer's inventory of Qualified Access Services and the Initial Tariff Rates (Initial Rate Analysis.)

Example: DS1-Initial Rate Analysis

Product Category/ Description	State	Zone	Term	Rate	Units	Total
DS1 - Channel Termination (CT)	CA	2	36	$25.00	4,000	$100,000
DS1 - Channel Mileage (CM-Fixed)				$21.00	1,600	$33,600
DS1 - Channel Mileage (CM-Per Mile)				$16.40	1,000	$16,400
DS1 Total					6,600	$150,000

(N)

(N)

23. Pricing Flexibility Contract Offerings (Cont'd)

23.1 Contract Offer No. 1 – Wireless Advantage Managed Services Value Incentive Plan (WAMS-VIP) Offer (Cont'd)

32.1.8 Termination (Cont'd)

(B) Rate Reductions (Cont'd)

Telephone Company shall also perform a similar exercise within sixty (60) days following each Term Year detailing the Customer's inventory from the Initial Rate Analysis and the end-of-year tariff rates (EOY Rate Analysis). The Customer and Telephone Company will then compare the Initial Rate Analysis to the EOY Rate Analysis to identify the percent change in the total, cumulative rates, if any.

Example: Initial Rate Analysis and EOY Rate Analysis Comparison

Product Category	Units	Initial Tariff Rates	EOY Tariff Rates	% Rate Change
DS1	6600	$150,000	$122,000	
DS3	2000	$ 90,000	$ 70,000	
SONET	N/A	N/A	N/A	
Total	8600	$240,000	$192,000	20%

20% = (1-($192,000/$240,000))

The quantity of units for each product category used in the Initial Rate Analysis and the EOY Rate Analysis will be calculated from the Qualified Access Service rate elements listed below:

(1) DS1 – Channel Terminations (CT), Channel Mileage (CM) fixed and Channel Mileage (CM) per mile;

(2) DS3 – CT, CM fixed, CM per mile and Multiplexing (MUX); and

(3) SONET – Not applicable.

(N)