ACCESS SERVICE

Regulations, Rates and Charges
applying to the provision of Access Services
within a Local Access and Transport Area (LATA) or equivalent
market area for connection to interstate communications facilities
for customers within the
operating territory of the

BELLSOUTH TELECOMMUNICATIONS, INC.

in the States of

	Company Code	
BellSouth Telecommunications, Inc. d/b/a Southern Bell Telephone and Telegraph Company	9417	
Florida	5191	
Georgia	5192	
North Carolina	5193	
South Carolina	5194	
BellSouth Telecommunications, Inc. d/b/a South Central Bell Telephone and Telegraph Company	9419	(T)
Alabama	5181	
Kentucky	5182	
Louisiana	5183	
Mississippi	5184	
Tennessee	5185	

The title and street address of this tariff's Issuing Officer are located on the top of Page 1, the Check Sheet.

Access Services are provided by means of wire, fiber optics, radio or any other suitable technology or a combination thereof.

****

ACCESS SERVICE
CHECK SHEET

The Title Page and Pages 1 to 29-6 inclusive of this tariff are effective as of the date shown.

Page	Number of Revision Except as Indicated	Page	Number of Revision Except as Indicated	Page	Number of Revision Except as Indicated
Title	2nd	21.1	1st	53	5th
1	717th*	22	24th	54	8th
1.1	2nd	22.1	5th	55	8th
2	216th	23	8th	56	5th
2.1	75th	23.1	Original	57	6th
3	70th	24	8th	58	4th
3.1	11th	25	12th	59	7th
4	164th	26	1st	60	9th
4.1	13th	27	5th	61	3rd
5	140th	27.0.1	4th	62	7th
5.1	91st	27.1	5th	63	3rd
5.1.1	27th	27.2	8th	63.1	3rd
6	96th	27.3	5th	64	4th
6.1	31st	27.4	5th	65	7th
6.2	Original	27.5	1st	66	3rd
7	129th	27.5.1	Original	67	9th
8	50th	27.6	6th	67.1	2nd
8.1	55th	27.6.1	Original	68	5th
8.2	5th	27.7	11th	69	5th
9	44th	27.7.1	4th	69.1	Original
9.0.0.1	24th	27.8	2nd	70	6th
9.0.0.2	10th	27.9	3rd	70.1	1st
9.0.1	16th	28	6th	71	8th
9.0.1.1	3rd	29	8th	72	11th
9.0.2	9th	30	2nd	72.1	5th
9.0.3	12th	31	8th	73	5th
9.0.3.1	1st	31.1	7th	74	7th
9.0.4	17th	32	7th	74.1	5th
9.0.4.1	6th	33	6th	75	10th
9.0.5	41st	34	6th	75.1	8th
9.0.5.1	22nd	35	4th	75.2	15th
9.0.5.2	21st*	36	5th	75.2.1	1st
9.1	Original	37	5th	76	5th
10	2nd	38	8th	77	3rd
11	11th	39	5th	1-1	6th
12	13th	40	7th	2-1	2nd
12.1	6th	41	3rd	2-2	4th
13	14th	42	6th	2-3	Original
14	7th	43	10th	2-4	Original
14.1	4th	44	7th	2-5	4th
15	9th	45	7th	2-6	1st
16	4th	46	7th	2-7	1st
17	15th	47	2nd	2-8	2nd
18	16th	48	5th	2-8.1	Original
18.1	5th	49	7th	2-9	1st
19	6th	50	5th	2-9.1	Original
20	14th	51	8th	2-10	Original
21	14th	52	5th	2-11	1st

All BellSouth marks contained herein and as set forth in the trademarks and servicemarks section of this Tariff are owned by BellSouth Intellectual Property Corporation.

*New or Revised Page

****

ACCESS SERVICE

CHECK SHEET

Page	Number of Revision Except as Indicated	Page	Number of Revision Except as Indicated	Page	Number of Revision Except as Indicated
2-12	13th				
2-12.0.1	8th*				
2-12.0.2	4th*				
2-12.1	16th*				
2-12.2	10th*				
2-13	10th				
2-13.1	1st				
2-14	11th				
2-15	13th				
2-15.1	3rd				
2-16	16th				
2-16.1	Original				
2-17	14th				
2-17.1	5th				
2-18	6th				
2-18.1	5th				
2-18.2	5th				
2-18.3	5th				
2-18.4	2nd				

All BellSouth marks contained herein and as set forth in the trademarks and servicemarks section of this Tariff are owned by BellSouth Intellectual Property Corporation.
****

ACCESS SERVICE

CHECK SHEET

Page	Number of Revision Except as Indicated	Page	Number of Revision Except as Indicated	Page	Number of Revision Except as Indicated
2-19	2nd	2-45.1	Original	2-49.0.18.11	Original
2-20	5th	2-46	7th	2-49.0.18.11.1	Original
2-21	8th	2-46.0.1	7th*	2-49.0.18.12	1st
2-21.1	3rd	2-46.1	8th	2-49.0.18.13	Original
2-21.2	1st	2-46.2	1st	2-49.0.18.13.1	Original
2-21.3	1st	2-46.3	1st	2-49.0.18.13.2	Original
2-22	7th	2-46.4	1st	2-49.0.18.14	1st
2-23	6th	2-47	2nd	2-49.0-18.14.1	Original
2-24	1st	2-48	4th	2-49.0.18.15	1st
2-24.1	Original	2-48.1	1st	2-49.0.18.16	Original
2-26	1st	2-49	10th	2-49.0.18.17	Original
2-27	Original	2-49.0.1	4th	2-49.0.18.18	Original
2-28	12th	2-49.0.1.1	Original	2-49.0.18.19	Original
2-28.1	2nd	2-49.0.2	4th	2-49.0.18.20	Original
2-28.2	5th	2-49.0.3	3rd	2-49.0.18.21	Original
2-28.3	2nd	2-49.0.4	1st	2-49.0.18.22	Original
2-29	3rd	2-49.0.5	1st	2-49.0.18.23	Original
2-30	20th	2-49.0.5.1	Original	2-49.0.18.24	Original
2-31	13th	2-49.0.6	Original	2-49.0.18.25	Original
2-31.1	3rd	2-49.0.7	Original	2-49.0.18.26	Original
2-32	2nd	2-49.0.8	Original	2-49.0.18.27	Original
2-33	7th	2-49.0.9	7th	2-49.0.18.28	Original
2-33.1	9th	2-49.0.10	5th	2-49.0.19	7th
2-33.2	7th	2-49.0.11	7th	2-49.1	17th
2-33.2.1	Original	2-49.0.11.1	1st	2-49.2	9th
2-33.2.2	Original	2-49.0.12	6th		
2-33.3	4th	2-49.0.12.1	Original		
2-33.4	2nd	2-49.0.13	7th		
2-33.5	3rd	2-49.0.14	5th		
2-33.6	Original	2-49.0.15	3rd		
2-33.7	2nd	2-49.0.16	2nd*		
2-33.8	Original	2-49.0.16.1	Original*		
2-34	1st	2-49.0.17	6th*		
2-35	2nd	2-49.0.18	3rd		
2-36	4th	2-49.0.18.1	7th		
2-37	5th	2-49.0.18.1.1	Original		
2-38	5th	2-49.0.18.2	6th		
2-39	5th	2-49.0.18.3	2nd		
2-40	5th	2-49.0.18.4	2nd		
2-41	7th	2-49.0.18.5	2nd		
2-42	4th	2-49.0.18.6	5th		
2-42.1	1st	2-49.0.18.6.1	6th		
2-42.2	Original	2-49.0.18.6.2	Original		
2-43	4th	2-49.0.18.7	8th		
2-43.1	Original	2-49.0.18.7.0.1	Original		
2-44	5th	2-49.0.18.7.1	4th		
2-44.1	2nd	2-49.0.18.8	3rd		
2-44.2	3rd	2-49.0.18.9	1st		
2-45	7th	2-49.0.18.10	Original		

All BellSouth marks contained herein and as set forth in the trademarks and servicemarks section of this Tariff are owned by BellSouth Intellectual Property Corporation.

*New or Revised Page

****

ACCESS SERVICE

CHECK SHEET

Page	Number of Revision Except as Indicated	Page	Number of Revision Except as Indicated	Page	Number of Revision Except as Indicated
2-50	10th	3-12	3rd	5-13	12th
2-51	6th	3-13	3rd	5-14	3rd
2-52	7th	3-14	7th	5-15	9th
2-52.1	8th	3-15	5th	5-16	1st
2-52.2	Original	3-16	5th	5-17	2nd
2-52.3	1st	3-17	5th	5-18	2nd
2-53	3rd	3-17.1	4th	5-19	8th
2-53.1	2nd	3-18	50th	5-19.1	2nd
2-54	5th	4-1	2nd	5-19.2	1st
2-54.1	9th	4-2	3rd	5-20	12th
2-55	3rd	4-3	3rd	5-20.1	Original
2-55.1	7th	4-4	3rd	5-21	11th
2-56	8th	4-5	16th	5-21.1	4th
2-57	1st	4-6	31st*	5-22	13th
2-58	3rd	4-7	21st*	5-22.1	2nd
2-59	5th	4-8	16th*	5-23	8th
2-59.1	7th	4-9	20th*	5-23.1	2nd
2-60	2nd	5-1	18th	5-23.2	3rd
2-61	4th	5-1.1	11th		
2-62	6th	5-1.1.1	Original		
2-62.1	3rd	5-1.2	11th		
2-63	3rd	5-1.2.1	7th		
2-64	1st	5-1.2.1.1	2nd		
2-65	3rd	5-1.2.2	1st		
2-66	3rd	5-1.3	10th		
2-67	7th	5-1.3.1	5th		
2-67.1	2nd	5-1.3.2	2nd		
2-68	3rd	5-1.4	3rd		
2-68.1	Original	5-2	8th		
2-69	4th	5-2.0.1	3rd		
2-70	3rd	5-2.1	4th		
2-70.1	6th	5-3	7th		
2-71	4th	5-4	6th		
2-72	5th	5-5	8th		
2-73	3rd	5-6	8th		
3-1	4th	5-7	8th		
3-2	5th	5-8	8th		
3-3	5th	5-8.1	3rd		
3-4	4th	5-9	7th		
3-5	3rd	5-9.1	2nd		
3-6	1st	5-10	6th		
3-7	2nd	5-11	11th		
3-8	Original	5-11.0.1	5th		
3-9	Original	5-11.1	10th		
3-10	2nd	5-11.1.1	2nd		
3-10.1	3rd	5-11.2	9th		
3-11	3rd	5-12	19th		

All BellSouth marks contained herein and as set forth in the trademarks and servicemarks section of this Tariff are owned by BellSouth Intellectual Property Corporation.

****

*New or Revised Page

ACCESS SERVICE
CHECK SHEET

Page	Number of Revision Except as Indicated	Page	Number of Revision Except as Indicated	Page	Number of Revision Except as Indicated
6-1	6th	6-25.13	Original	6-60	5th
6-2	4th	6-25.14	Original	6-61	3rd
6-3	7th	6-25.15	Original	6-62	5th
6-3.1	1st	6-25.16	Original	6-63	3rd
6-4	7th	6-26	8th	6-64	6th
6-5	4th	6-27	11th	6-65	4th
6-6	7th	6-27.0.1	Original	6-66	3rd
6-7	14th	6-27.1	9th	6-67	3rd
6-7.1	Original	6-27.2	2nd	6-68	3rd
6-8	12th	6-27.3	2nd	6-69	6th
6-9	6th	6-27.4	Original	6-70	2nd
6-10	5th	6-28	12th	6-71	3rd
6-11	9th	6-28.1	4th	6-72	3rd
6-11.1	6th	6-29	10th	6-73	4th
6-11.2	5th	6-30	4th	6-74	7th
6-11.3	2nd	6-31	4th	6-75	7th
6-11.4	4th	6-32	4th	6-75.1	10th
6-12	5th	6-33	5th	6-75.2	8th
6-12.1	6th	6-34	5th	6-75.3	3rd
6-13	7th	6-34.1	4th	6-75.4	4th
6-14	6th	6-35	4th	6-75.5	2nd
6-15	5th	6-36	6th	6-75.6	1st
6-16	5th	6-37	5th	6-75.7	1st
6-17	5th	6-38	5th	6-75.8	2nd
6-18	5th	6-39	5th	6-75.9	2nd
6-18.1	7th	6-40	4th	6-75.10	5th
6-19	6th	6-41	6th	6-75.10.1	Original
6-20	6th	6-42	5th	6-75.11	2nd
6-21	7th	6-43	5th	6-75.12	2nd*
6-22	9th	6-44	5th	6-75.13	4th
6-22.1	5th	6-45	7th	6-75.14	3rd
6-23	4th	6-46	10th	6-75.15	1st
6-23.1	3rd	6-47	8th	6-75.16	1st
6-24	7th	6-48	9th	6-75.17	Original
6-25	10th	6-49	11th	6-75.18	1st
6-25.1	7th	6-50	9th	6-75.19	Original
6-25.2	4th	6-51	8th	6-75.20	Original
6-25.3	10th	6-52	9th	6-75.21	Original
6-25.3.1	2nd	6-52.0.1	Original	6-75.22	1st
6-25.4	3rd	6-52.1	5th	6-75.22.1	Original
6-25.5	3rd	6-53	7th	6-75.23	2nd
6-25.6	4th	6-53.1	5th	6-75.24	Original
6-25.7	2nd	6-54	6th	6-76	6th
6-25.8	Original	6-55	9th	6-77	6th
6-25.9	1st	6-56	1st	6-77.1	5th
6-25.10	2nd	6-57	5th	6-78	6th
6-25.10.1	2nd	6-58	3rd	6-78.1	3rd
6-25.11	Original	6-58.1	1st	6-79	6th
6-25.12	Original	6-59	4th		

All BellSouth marks contained herein and as set forth in the trademarks and servicemarks section of this Tariff are owned by BellSouth Intellectual Property Corporation.

*New or Revised Page

****

ACCESS SERVICE
CHECK SHEET

Page	Number of Revision Except as Indicated	Page	Number of Revision Except as Indicated	Page	Number of Revision Except as Indicated
6-80	7th	6-123	1st		
6-81	8th	6-124	2nd		
6-82	7th	6-125	4th		
6-83	5th	6-125.1	8th		
6-84	4th	6-125.2	3rd		
6-85	6th	6-126	15th		
6-86	8th	6-126.1	10th		
6-87	12th	6-126.2	4th		
6-87.0.1	1st	6-127	3rd		
6-87.1	5th	6-128	5th		
6-87.2	5th	6-129	12th		
6-88	7th	6-130	12th		
6-88.1	3rd	6-130.1	7th		
6-88.2	Original	6-130.2	6th		
6-89	5th	6-130.3	4th		
6-90	5th	6-130.4	Original		
6-91	5th	6-131	4th		
6-92	6th	6-132	10th		
6-92.1	5th	6-133	10th		
6-93	6th	6-134	10th		
6-93.1	3rd	6-135	8th		
6-94	7th	6-136	7th		
6-94.0.1	1st	6-137	7th		
6-94.1	2nd	6-138	10th*		
6-95	7th	6-139	5th		
6-96	7th	6-140	4th		
6-97	4th				
6-98	4th				
6-99	4th				
6-100	5th				
6-101	4th				
6-102	1st				
6-103	1st				
6-104	1st				
6-105	5th				
6-106	2nd				
6-107	5th				
6-108	8th				
6-109	6th				
6-110	2nd				
6-111	7th				
6-112	4th				
6-113	7th				
6-114	1st				
6-115	4th				
6-116	1st				
6-117	1st				
6-118	5th				
6-119	6th				
6-120	5th				
6-121	7th				
6-122	2nd				

All BellSouth marks contained herein and as set forth in the trademarks and servicemarks section of this Tariff are owned by BellSouth Intellectual Property Corporation.

*New or Revised Page

****

ACCESS SERVICE
CHECK SHEET

Page	Number of Revision Except as Indicated	Page	Number of Revision Except as Indicated	Page	Number of Revision Except as Indicated
6-141	4th	6-157.2	7th	6-160.23	Original
6-141.1	4th	6-157.2.1	10th	6-160.24	Original
6-142	6th	6-157.2.2	10th	6-160.25	Original
6-143	1st	6-157.2.3	11th	6-160.26	Original
6-144	4th	6-157.2.4	7th	6-160.27	Original
6-145	4th	6-157.2.5	7th	6-160.28	Original
6-146	4th	6-157.2.6	7th	6-160.29	Original
6-147	5th	6-157.2.6.1	2nd	6-160.30	Original
6-148	6th	6-157.2.7	13th	6-160.31	Original
6-149	4th	6-157.2.8	11th	6-160.32	Original
6-150	5th	6-157.3	4th	6-160.33	Original
6-151	4th	6-158	5th	6-160.34	Original
6-151.1	2nd	6-159	7th	6-160.35	Original
6-152	5th	6-159.1	5th	6-160.36	Original
6-152.1	2nd	6-159.1.1	6th	6-161	25th
6-153	7th	6-159.1.1.1	5th	6-162	5th
6-153.1	1st	6-159.1.2	4th	6-163	5th
6-154	8th	6-159.1.3	2nd	6-164	5th
6-154.1	Original	6-160	6th	6-164.1	12th
6-155	8th	6-160.1	4th	6-165	7th
6-155.1	4th	6-160.2	8th	6-165.1	1st
6-155.2	4th	6-160.3	2nd	6-165.2	2nd
6-156	15th	6-160.4	4th	6-166	6th
6-157	13th	6-160.5	5th*	6-167	5th
6-157.1	5th	6-160.6	5th*	6-168	6th
6-157.1.0.1	Original	6-160.7	6th	6-169	9th
6-157.1.0.2	1st	6-160.8	6th	6-169.1	Original
6-157.1.0.3	3rd	6-160.9	8th*	6-170	5th
6-157.1.0.4	Original	6-160.10	4th*	6-171	5th
6-157.1.0.5	Original	6-160.11	7th	6-172	6th
6-157.1.0.6	1st	6-160.12	Original	6-173	6th
6-157.1.0.7	Original	6-160.13	Original	6-174	3rd
6-157.1.0.8	Original	6-160.14	Original	6-175	4th
6-157.1.1	8th	6-160.15	Original	6-176	20th
6-157.1.1.1	5th	6-160.16	Original	6-177	10th
6-157.1.2	7th	6-160.17	Original	6-177.1	4th
6-157.1.2.1	6th	6-160.18	Original	6-178	8th
6-157.1.3	12th	6-160.19	Original	6-178.1	7th
6-157.1.3.1	8th	6-160.20	Original	6-178.2	6th
6-157.1.4	9th	6-160.21	Original		
6-157.1.5	9th	6-160.22	Original		

All BellSouth marks contained herein and as set forth in the trademarks and servicemarks section of this Tariff are owned by BellSouth Intellectual Property Corporation.

*New or Revised Page

ACCESS SERVICE
CHECK SHEET

Page	Number of Revision Except as Indicated	Page	Number of Revision Except as Indicated	Page	Number of Revision Except as Indicated
7-1	5th	7-36.1	4th		
7-2	11th	7-37	4th		
7-2.1	1st	7-38	3rd		
7-3	7th	7-38.1	5th		
7-4	12th	7-38.2	3rd		
7-4.1	Original	7-38.3	5th		
7-5	6th	7-38.4	4th		
7-6	6th	7-38.5	5th		
7-6.1	7th	7-38.5.1	Original		
7-7	9th	7-38.6	4th		
7-8	7th	7-38.7	1st		
7-8.1	12th	7-38.7.1	Original		
7-8.1.1	3rd	7-38.8	2nd		
7-8.1.2	Original	7-38.9	4th		
7-8.2	4th	7-38.9.1	Original		
7-8.3	4th	7-38.10	3rd		
7-8.3.1	1st	7-38.11	4th		
7-8.4	2nd	7-38.12	Original		
7-9	2nd	7-39	1st		
7-10	2nd	7-40	2nd		
7-11	2nd	7-41	2nd		
7-12	2nd	7-42	1st		
7-13	8th	7-43	1st		
7-13.0.1	1st	7-44	3rd		
7-13.1	3rd	7-45	3rd		
7-14	5th	7-46	3rd		
7-14.1	1st	7-47	5th		
7-14.2	1st	7-48	7th		
7-14.3	1st	7-49	7th*		
7-14.4	Original	7-49.0.1	2nd		
7-15	3rd	7-49.1	5th		
7-16	9th	7-49.4.0.1	Original		
7-17	6th	7-49.1.1	3rd		
7-18	7th	7-49.2	5th		
7-19	10th	7-49.3	7th		
7-20	1st	7-49.3.1	2nd		
7-21	1st	7-49.4	6th		
7-22	2nd	7-49.4.0.1	2nd		
7-23	1st	7-49.4.1	4th		
7-24	1st	7-49.5	4th		
7-25	1st	7-50	3rd		
7-26	3rd	7-51	4th		
7-27	2nd	7-52	4th		
7-28	2nd	7-53	5th		
7-29	2nd	7-54	4th		
7-30	4th				
7-31	2nd				
7-32	3rd				
7-33	2nd				
7-34	2nd				
7-35	1st				
7-36	3rd				

All BellSouth marks contained herein and as set forth in the trademarks and servicemarks section of this Tariff are owned by BellSouth Intellectual Property Corporation.

*New or Revised Page

****

ACCESS SERVICE
CHECK SHEET

Page	Number of Revision Except as Indicated	Page	Number of Revision Except as Indicated	Page	Number of Revision Except as Indicated
7-55	3rd	7-66	4th	7-94	3rd
7-55.1	3rd*	7-67	4th	7-94.1	2nd
7-56	9th	7-68	5th	7-95	1st
7-57	8th	7-68.1	1st	7-96	2nd
7-57.1	7th	7-69	8th	7-97	2nd
7-57.1.1	1st	7-70	15th	7-98	1st
7-57.2	8th	7-70.1	11th	7-99	2nd
7-57.2.1	4th	7-71	3rd	7-99.1	1st
7-57.3	8th	7-71.1	3rd	7-99.2	1st
7-57.4	Original	7-72	3rd	7-99.3	1st
7-58	8th	7-73	3rd	7-100	9th
7-58.1	5th	7-74	4th	7-100.1	Original
7-58.2	3rd	7-74.1	6th	7-101	7th
7-58.3	4th	7-75	4th	7-101.1	7th
7-58.4	1st	7-76	1st	7-101.2	Original
7-58.5	2nd	7-77	1st	7-102	8th
7-58.6	4th	7-78	1st	7-102.1	7th
7-58.6.1	4th	7-79	24th	7-103	10th
7-58.7	1st	7-79.1	Original	7-103.1	6th
7-58.7.1	3rd	7-80	6th	7-103.1.1	2nd
7-58.7.2	Original	7-80.1	3rd	7-103.2	4th
7-58.8	5th	7-81	6th	7-103.3	5th
7-58.8.1	1st	7-81.1	2nd	7-103.3.1	3rd
7-58.9	3rd	7-81.2	1st	7-103.4	2nd
7-58.9.1	1st	7-82	4th	7-103.5	3rd
7-58.10	6th	7-83	5th	7-103.6	7th
7-58.10.0.1	Original	7-84	10th	7-103.6.1	2nd
7-58.10.1	2nd	7-84.1	6th	7-103.7	4th
7-58.11	6th	7-85	12th	7-103.8	5th
7-58.11.1	2nd	7-86	2nd	7-103.8.1	3rd
7-58.12	7th	7-86.1	9th	7-103.9	1st
7-58.13	8th	7-86.1.1	4th	7-103.10	3rd
7-58.14	6th	7-86.2	5th	7-103.11	3rd
7-58.15	3rd	7-86.2.1	2nd	7-103.11.1	1st
7-58.16	3rd	7-86.3	7th	7-103.12	2nd
7-58.17	4th	7-86.3.1	Original	7-103.12.1	1st
7-58.17.1	2nd	7-86.4	4th	7-103.13	7th
7-58.18	3rd	7-87	8th	7-103.13.1	Original
7-58.19	1st	7-88	2nd	7-103.14	7th
7-58.20	Original#	7-88.1	5th	7-103.14.1	Original
7-58.21	Original#	7-89	5th	7-103.15	3rd
7-58.22	Original#	7-90	6th	7-103.15.1	1st
7-59	7th	7-90.1	6th	7-103.16	3rd
7-60	5th	7-91	8th	7-103.17	1st
7-61	4th	7-91.0.1	1st	7-103.18	3rd
7-61.1	1st	7-91.1	1st	7-103.18.1	4th
7-62	3rd	7-92	3rd	7-103.18.2	Original
7-63	2nd	7-92.1	7th	7-103.19	3rd
7-64	1st	7-92.2	1st	7-103.20	3rd
7-65	5th	7-93	2nd	7-103.21	1st

All BellSouth marks contained herein and as set forth in the trademarks and servicemarks section of this Tariff are owned by BellSouth Intellectual Property Corporation.

****

* New or Revised Page
# The material on this page is not revised in this filing. The check sheet only is being changed to reflect the correct page number.

ACCESS SERVICE
CHECK SHEET

Page	Number of Revision Except as Indicated	Page	Number of Revision Except as Indicated	Page	Number of Revision Except as Indicated
7-103.2	4th	7-109	9th	7-145.0.1.2	6th
7-103.3	5th	7-110	7th	7-145.0.1.2.1	3rd
7-103.3.1	3rd	7-111	4th	7-145.0.1.3	5th
7-103.4	2nd	7-112	2nd	7-145.0.1.4	1st
7-103.5	2nd	7-113	2nd	7-145.0.1.5	5th
7-103.6	7th	7-114	2nd	7-145.0.1.6	4th
7-103.6.1	1st	7-115	2nd	7-145.0.1.7	Original
7-103.7	4th	7-116	2nd	7-145.0.1.8	4th
7-103.8	5th	7-117	5th	7-145.0.1.9	4th
7-103.8.1	3rd	7-118	4th	7-145.0.2	3rd
7-103.9	1st	7-119	15th*	7-145.0.2.1	2nd
7-103.10	3rd	7-120	5th	7-145.0.2.2	2nd
7-103.11	3rd	7-121	7th	7-145.0.3	1st
7-103.11.1	1st	7-122	5th	7-145.0.3.1	4th
7-103.12	2nd	7-123	1st	7-145.0.3.2	7th
7-103.12.1	1st	7-124	1st	7-145.0.3.3	5th
7-103.13	7th	7-125	1st	7-145.0.3.4	3rd
7-103.13.1	Original	7-126	1st	7-145.0.3.5	7th
7-103.14	7th	7-127	10th	7-145.0.3.6	5th
7-103.14.1	Original	7-128	5th	7-145.0.3.7	2nd
7-103.15	3rd	7-129	4th	7-145.0.3.8	5th
7-103.15.1	1st	7-129.1	7th	7-145.0.3.9	4th
7-103.16	3rd	7-129.2	3rd	7-145.0.4	1st
7-103.17	1st	7-129.2.1	4th	7-145.0.4.1	2nd
7-103.18	3rd	7-129.3	8th	7-145.0.4.2	5th
7-103.18.1	4th	7-129.3.1	2nd	7-145.0.4.3	4th
7-103.18.2	Original	7-129.4	10th	7-145.0.4.4	1st
7-103.19	3rd	7-129.4.1	2nd	7-145.0.4.5	1st
7-103.20	3rd	7-129.5	6th	7-145.0.4.6	Original
7-103.21	1st	7-129.6	4th	7-145.0.4.7	Original
7-103.22	5th	7-129.7	5th	7-145.0.5	7th
7-103.23	12th	7-129.8	6th	7-145.0.6	4th
7-103.23.1	2nd	7-130	2nd	7-145.0.6.1	5th
7-103.24	9th	7-131	1st	7-145.0.6.2	7th
7-103.24.0.1	6th	7-132	2nd	7-145.0.6.3	2nd
7-103.24.1	7th	7-133	1st	7-145.0.7	1st
7-103.24.2	6th	7-134	1st	7-145.0.7.1	9th
7-103.24.3	9th	7-135	13th*	7-145.0.7.2	9th
7-103.24.3.1	3rd	7-136	12th	7-145.0.7.3	9th
7-103.24.3.2	1st	7-137	7th	7-145.0.7.4	5th
7-103.24.4	5th	7-138	7th	7-145.0.7.5	8th
7-103.24.5	4th	7-139	2nd	7-145.0.7.6	7th
7-103.24.6	4th	7-140	2nd	7-145.0.7.7	4th
7-103.25	Original	7-141	2nd	7-145.0.7.8	7th
7-103.26	Original	7-142	2nd	7-145.0.7.9	7th
7-103.26.1	Original	7-143	5th	7-145.0.8	5th
7-103.27	Original	7-144	6th	7-145.0.8.1	6th
7-103.28	Original	7-144.1	9th*	7-145.0.8.2	6th
7-103.29	Original	7-144.2	6th*	7-145.0.9	1st
7-104	3rd	7-144.2.1	1st*	7-145.0.9.1	7th
7-105	1st	7-144.3	Original	7-145.0.9.2	9th
7-106	2nd	7-145	6th	7-145.0.9.3	7th
7-107	1st	7-145.0.1	1st		
7-108	21st*	7-145.0.1.1	4th		

All BellSouth marks contained herein and as set forth in the trademarks and servicemarks section of this Tariff are owned by BellSouth Intellectual Property Corporation.

*New or Revised Page

****

ACCESS SERVICE
CHECK SHEET

Page	Number of Revision Except as Indicated	Page	Number of Revision Except as Indicated	Page	Number of Revision Except as Indicate
7-145-0.9.4	7th	7-147.0.1.15	1st	7-147.0.3.9	9th
7-145.0.9.5	9th	7-147.0.1.16	1st	7-147.0.3.10	5th
7-145.0.9.6	6th	7-147.0.1.17	Original	7-147.0.3.11	5th
7-145.0.9.7	5th	7-147.0.1.18	1st	7-147.0.3.12	6th
7-145.0.9.8	6th	7-147.0.1.19	1st	7-147.0.3.13	6th
7-145.0.9.9	5th	7-147.0.2	1st	7-147.0.3.14	4th
7-145.0.10	1st	7-147.0.2.1	3rd	7-147.0.3.15	6th
7-145.0.10.1	5th	7-147.0.2.2	5th	7-147.0.3.16	6th
7-145.0.10.2	6th	7-147.0.2.3	5th	7-147.0.3.17	5th
7-145.0.10.3	5th	7-147.0.2.4	2nd	7-147.0.3.18	6th
7-145.0.10.4	3rd	7-147.0.2.5	5th	7-147.0.3.19	6th
7-145.0.10.5	3rd	7-147.0.2.6	5th	7-147.0.4	1st
7-145.0.10.6	1st	7-147.0.2.7	3rd	7-147.0.4.1	7th
7-145.0.10.7	1st	7-147.0.2.8	5th	7-147.0.4.2	8th
7-145.0.11	8th	7-147.0.2.9	5th	7-147.0.4.3	9th
7-145.0.12	4th	7-147.0.2.9.1	Original	7-147.0.4.4	5th
7-145.0.12.1	7th	7-147.0.2.9.2	Original	7-147.0.4.5	8th
7-145.0.12.2	7th	7-147.0.2.9.3	Original	7-147.0.4.6	8th
7-145.1	19th	7-147.0.2.9.4	Original	7-147.0.4.7	6th
7-145.2	18th	7-147.0.2.9.5	Original	7-147.0.4.8	8th
7-145.3	18th	7-147.0.2.9.6	Original	7-147.0.4.9	8th
7-145.4	12th	7-147.0.2.9.7	Original	7-147.0.4.9.1	2nd
7.145.4.1	13th	7-147.0.2.9.8	Original	7-147.0.4.9.2	3rd
7-145.4.2	11th	7-147.0.2.9.9	Original	7-147.0.4.9.3	3rd
7-145.4.3	10th	7-147.0.2.9.10	Original	7-147.0.4.9.4	2nd
7-145.4.4	9th	7-147.0.2.9.11	Original	7-147.0.4.9.5	3rd
7-145.4.5	7th	7-147.0.2.9.12	Original	7-147.0.4.9.6	3rd
7-145.5	11th	7-147.0.2.9.13	Original	7-147.0.4.9.7	2nd
7-145.6	2nd	7-147.0.2.9.14	Original	7-147.0.4.9.8	3rd
7-145.6.1	Original	7-147.0.2.9.15	Original	7-147.0.4.9.9	3rd
7-145.6.2	1st	7-147.0.2.9.16	Original	7-147.0.4.9.10	2nd
7-145.6.3	Original	7-147.0.2.9.17	Original	7-147.0.4.9.11	2nd
7-146	14th	7-147.0.2.9.18	Original	7-147.0.4.9.12	2nd
7-146.1	2nd	7-147.0.2.9.19	Original	7-147.0.4.9.13	2nd
7-146.2	13th	7-147.0.2.9.20	Original	7-147.0.4.9.14	2nd
7-146.3	13th*	7-147.0.2.9.21	Original	7-147.0.4.9.15	2nd
7-147	5th	7-147.0.2.9.22	Original	7-147.0.4.9.16	2nd
7-147.0.1	1st	7-147.0.2.9.23	Original	7-147.0.4.9.17	2nd
7-147.0.1.1	4th	7-147.0.2.9.24	Original	7-147.0.4.9.18	2nd
7-147.0.1.2	5th	7-147.0.2.9.25	Original	7-147.0.4.9.19	1st
7-147.0.1.3	5th	7-147.0.2.9.26	Original	7-147.0.4.9.20	1st
7-147.0.1.4	2nd	7-147.0.2.9.27	Original	7-147.0.4.9.21	1st
7-147.0.1.5	5th	7-147.0.2.10	7th	7-147.0.4.9.22	1st
7-147.0.1.6	5th	7-147.0.3	1st	7-147.0.4.9.23	1st
7-147.0.1.7	3rd	7-147.0.3.1	8th	7-147.0.4.9.24	1st
7-147.0.1.8	6th	7-147.0.3.2	9th	7-147.0.4.9.25	1st
7-147.0.1.9	5th	7-147.0.3.3	9th	7-147.0.4.9.26	1st
7-147.0.1.10	2nd	7-147.0.3.4	7th	7-147.0.4.9.27	1st
7-147.0.1.11	1st	7-147.0.3.5	9th	7-147.0.4.10	8th
7-147.0.1.12	1st	7-147.0.3.6	9th	7-147.1	18th
7-147.0.1.13	1st	7-147.0.3.7	8th		
7-147.0.1.14	Original	7-147.0.3.8	9th		

All BellSouth marks contained herein and as set forth in the trademarks and servicemarks section of this Tariff are owned by BellSouth Intellectual Property Corporation.

*New or Revised Page

****

ACCESS SERVICE
CHECK SHEET

Page	Number of Revision Except as Indicated	Page	Number of Revision Except as Indicated	Page	Number of Revision Except as Indicated
7-148	16th	7-152.3	4th*	7-152.7.24	3rd
7-148.0.1	Original	7-152.3.1	1st	7-152.8	7th*
7-148.0.2	Original	7-152.3.2	1st	7-152.8.0.1	Original*
7-148.1	6th	7-152.3.3	1st	7-152.8.1	2nd
7-148.2	1st	7-152.3.4	1st	7-152.8.2	4th
7-148.3	1st	7-152.3.5	1st	7-152.8.3	3rd
7-149	6th	7-152.3.6	1st	7-152.8.4	3rd
7-149.1	4th	7-152.3.7	1st	7-152.8.5	3rd
7-150	4th	7-152.3.8	1st	7-152.8.6	2nd
7-151	1st	7-152.3.9	Original	7-152.8.7	3rd
7-152	4th	7-152.3.10	Original	7-152.8.8	3rd
7-152.1	1st	7-152.3.11	1st	7-152.8.9	3rd
7-152.2	1st	7-152.3.12	1st	7-152.8.9.1	Original
7-152.2.1	1st	7-152.3.13	1st	7-152.8.9.2	Original
7-152.2.2	1st	7-152.3.14	4th	7-152.8.10	3rd
7-152.2.3	Original	7-152.3.14.1	Original	7-152.8.11	3rd
7-152.2.4	Original	7-152.3.14.2	Original	7-152.9	4th
7-152.2.5	1st	7-152.3.15	1st	7-152.9.1	2nd*
7-152.2.6	1st	7-152.4	4th*	7-153	12th
7-152.2.7	1st	7-152.5	2nd*	7-154	12th
7-152.2.8	1st	7-152.6	1st	7-154.1	11th
7-152.2.8.1	1st	7-152.7	2nd	7-154.2	5th
7-152.2.8.2	1st	7-152.7.1	4th	7-154.3	12th
7-152.2.9	2nd	7-152.7.2	6th	7-155	8th
7-152.2.10	2nd	7-152.7.3	3rd	7-155.1	7th
7-152.2.11	1st	7-152.7.4	1st	7-155.2	5th
7-152.2.12	1st	7-152.7.5	2nd	7-155.3	4th
7-152.2.13	2nd	7-152.7.6	2nd	7-155.4	4th
7-152.2.14	2nd	7-152.7.6.0.1	Original	7-156	10th
7-152.2.14.1	2nd	7-152.7.6.1	1st	7-156.1	9th
7-152.2.14.2	2nd	7-152.7.6.2	1st	7-156.2	6th
7-152.2.15	Original	7-152.7.7	6th		
7-152.2.16	Original	7-152.7.8	6th		
7-152.2.17	Original	7-152.7.9	6th		
7-152.2.18	Original	7-152.7.9.1	4th		
7-152.2.19	1st	7-152.7.9.2	4th		
7-152.2.20	1st	7-152.7.10	Original		
7-152.2.21	1st	7-152.7.11	Original		
7-152.2.22	1st	7-152.7.12	Original		
7-152.2.23	1st	7-152.7.13	3rd		
7-152.2.24	1st	7-152.7.14	5th		
7-152.2.25	2nd	7-152.7.15	4th		
7-152.2.26	1st	7-152.7.16	4th		
7-152.2.27	Original	7-152.7.17	4th		
7-152.2.28	Original	7-152.7.18	3rd		
7-152.2.29	1st	7-152.7.19	4th		
7-152.2.30	1st	7-152.7.20	4th		
7-152.2.31	1st	7-152.7.21	4th		
7-152.2.32	4th	7-152.7.22	4th		
7-152.2.32.1	Original	7-157.7.22.1	Original		
7-152.2.32.2	Original	7-157.7.22.2	Original		
7-152.2.33	1st	7-152.7.23	3rd		

All BellSouth marks contained herein and as set forth in the trademarks and servicemarks section of this Tariff are owned by BellSouth Intellectual Property Corporation.

*New or Revised Page

****

ACCESS SERVICE
CHECK SHEET

Page	Number of Revision Except as Indicated	Page	Number of Revision Except as Indicated	Page	Number of Revision Except as Indicated
7-156.2.0.1	3rd	7-156.23.2	Original	7-156.37.2	Original
7-156.2.1	2nd	7-156.23.3	1st	7-156.37.3	1st
7-156.3	5th	7-156.23.4	Original	7-156.37.4	Original
7-156.3.1	2nd	7-156.23.5	Original	7-156.37.5	Original
7-156.3.2	1st	7-156.24	Original	7-156.38	Original
7-156.4	6th	7-156.25	Original	7-156.39	Original
7-156.5	5th	7-156.25.1	Original	7-156.39.1	Original
7-156.6	6th	7-156.25.2	Original	7-156.39.2	Original
7-156.7	5th	7-156.25.3	1st	7-156.39.3	1st
7-156.8	6th	7-156.25.4	Original	7-156.39.4	Original
7-156.9	8th*	7-156.25.5	Original	7-156.39.5	Original
7-156.9.1	7th	7-156.26	Original	7-156.40	Original
7-156.9.1.1	1st	7-156.27	Original	7-156.41	Original
7-156.9.2	1st	7-156.27.1	Original	7-156.41.1	Original
7-156.10	6th	7-156.27.2	Original	7-156.41.2	Original
7-156.11	5th	7-156.27.3	1st	7-156.41.3	1st
7-156.12	1st	7-156.27.4	Original	7-156.41.4	Original
7-156.13	13th	7-156.27.5	Original	7-156.41.5	Original
7-156.14	Original	7-156.28	Original	7-156.42	Original
7-156.15	Original	7-156.29	Original	7-156.43	Original
7-156.15.1	Original	7-156.29.1	Original	7-156.43.1	Original
7-156.15.2	Original	7-156.29.2	Original	7-156.43.2	Original
7-156.15.3	1st	7-156.29.3	1st	7-156.43.3	1st
7-156.15.4	Original	7-156.29.4	Original	7-156.43.4	Original
7-156.15.5	Original	7-156.29.5	Original	7-156.43.5	Original
7-156.16	Original	7-156.30	Original	7-156.44	Original
7-156.17	Original	7-156.31	Original	7-156.45	Original
7-156.17.1	Original	7-156.31.1	Original	7-156.45.1	Original
7-156.17.2	Original	7-156.31.2	Original	7-156.45.2	Original
7-156.17.3	1st	7-156.31.3	1st	7-156.45.3	1st
7-156.17.4	Original	7-156.31.4	Original	7-156.45.4	Original
7-156.17.5	Original	7-156.31.5	Original	7-156.45.5	Original
7-156.18	Original	7-156.32	Original	7-156.46	Original
7-156.19	Original	7-156.33	Original	7-156.47	Original
7-156.19.1	Original	7-156.33.1	Original	7-156.47.1	Original
7-156.19.2	Original	7-156.33.2	Original	7-156.47.2	Original
7-156.19.3	1st	7-156.33.3	1st	7-156.47.3	1st
7-156.19.4	Original	7-156.33.4	Original	7-156.47.4	Original
7-156.19.5	Original	7-156.33.5	Original	7-156.47.5	Original
7-156.20	Original	7-156.34	Original	7-156.48	Original
7-156.21	Original	7-156.35	Original	7-156.49	Original
7-156.21.1	Original	7-156.35.1	Original	7-156.49.1	Original
7-156.21.2	Original	7-156.35.2	Original	7-156.49.2	Original
7-156.21.3	1st	7-156.35.3	1st	7-156.49.3	1st
7-156.21.4	Original	7-156.35.4	Original	7-156.49.4	Original
7-156.21.5	Original	7-156.35.5	Original	7-156.49.5	Original
7-156.22	Original	7-156.36	Original		
7-156.23	Original	7-156.37	Original		
7-156.23.1	Original	7-156.37.1	Original		

All BellSouth marks contained herein and as set forth in the trademarks and servicemarks section of this Tariff are owned by BellSouth Intellectual Property Corporation.

*New or Revised Page

****

ACCESS SERVICE
CHECK SHEET

Page	Number of Revision Except as Indicated	Page	Number of Revision Except as Indicated	Page	Number of Revision Except as Indicated
7-156.50	Original	7-156.65	Original		
7-156.51	Original	7-156.65.1	Original		
7-156.51.1	Original	7-156.65.2	Original		
7-156.51.2	Original	7-156.65.3	1st*		
7-156.51.3	1st*	7-156.65.4	Original*		
7-156.51.4	Original*	7-156.65.5	Original*		
7-156.51.5	Original*	7-156.66	Original		
7-156.52	Original	7-156.67	Original		
7-156.53	Original	7-156.67.1	Original		
7-156.53.1	Original	7-156.67.2	Original		
7-156.53.2	Original	7-156.67.3	1st*		
7-156-53.3	1st*	7-156.67.4	Original*		
7-156-53.4	Original*	7-156.67.5	Original*		
7-156-53.5	Original*	7-156.68	2nd		
7-156.54	Original	7-156.69	2nd		
7-156.55	Original	7-156.70	3rd		
7-156.55.1	Original				
7-156.55.2	Original				
7-156.55.3	1st*				
7-156.55.4	Original*				
7-156.55.5	Original*				
7-156.56	Original				
7-156.57	Original				
7-156.57.1	Original				
7-156.57.2	Original				
7-156.57.3	1st*				
7-156.57.4	Original*				
7-156.57.5	Original*				
7-156.58	Original				
7-156.59	Original				
7-156.59.1	Original				
7-156.59.2	Original				
7-156.59.3	1st*				
7-156.59.4	Original*				
7-156.59.5	Original*				
7-156.60	Original				
7-156.61	Original				
7-156.61.1	Original				
7-156.61.2	Original				
7-156.61.3	1st*				
7-156.61.4	Original*				
7-156.61.5	Original*				
7-156.62	Original				
7-156.62	Original				
7-156.63	Original				
7-156.64	Original				
7-156.63.1	Original				
7-156.63.2	Original				
7-156.63.3	1st*				
7-156.63.4	Original*				
7-156.63.5	Original*				
7-156.64	Original				

****

ACCESS SERVICE
CHECK SHEET

Page	Number of Revision Except as Indicated	Page	Number of Revision Except as Indicated	Page	Number of Revision Except as Indicated
7-156.71	2nd	7-162	1st	9-22	Original
7-156.72	2nd	7-163	1st	9-23	4th
7-156.73	3rd	7-164	1st	9-24	4th
7-156.74	Original	7-165	1st	9-25	4th
7-156.75	Original	7-166	1st	9-26	Original
7-156.76	2nd	7-167	1st	9-27	Original
7-156.77	2nd	7-168	1st	10-1	1st
7-156.78	2nd	7-169	1st	10-2	1st
7-156.79	4th	7-170	1st	10-3	1st
7-156.80	2nd	7-171	1st	10-4	1st
7-156.81	2nd	7-172	3rd	10-5	1st
7-156.82	4th	7-170	1st	10-6	1st
7-156.83	Original	7-171	1st	10-6.1	1st
7-156.84	Original	7-172	3rd	10-6.2	2nd
7-156.85	3rd	7-173	2nd	10-6.3	2nd
7-156.86	2nd	7-174	2nd	10-6.4	1st
7-156.87	2nd	7-175	3rd	10-6.5	1st
7-156.88	3rd	7-176	Original	10-6.6	1st
7-156.89	Original	7-177	Original	10-6.7	1st
7-156.90	Original	7-178	Original	10-6.8	1st
7-156.91	2nd	8-1	Original	10-6.9	1st
7-156.92	1st	9-1	2nd	10-7	3rd
7-156.92.1	Original	9-2	4th	10-7.1	1st
7-156.92.2	Original	9-3	6th	10-7.1.1	Original*
7-156.92.3	Original	9-4	7th	10-7.2	Original
7-156.92.4	Original	9-4.1	2nd	10-8	1st
7-156.92.5	Original	9-5	2nd	10-9	Original
7-156.92.6	Original	9-6	5th	10-10	1st
7-156.92.7	Original	9-7	6th	10-10.1	Original
7-156.92.8	Original	9-8	6th	10-10.2	2nd
7-156.92.9	Original	9-9	3rd	10-10.3	4th
7-156.92.10	Original	9-10	6th	10-10.4	Original
7-156.92.11	Original	9-11	6th	10-10.5	Original*
7-156.92.12	Original	9-11.0.1	3rd	10-11	1st
7-156.92.13	Original	9-11.0.2	3rd	10-12	Original
7-156.92.14	Original	9-11.1	7th	10-13	Original
7-156.92.15	Original	9-12	11th	10-14	Original
7-156.92.16	Original	9-12.0.1	5th	10-15	Original
7-156.92.17	Original	9-12.0.2	4th	10-16	Original
7-156.92.18	Original	9-12.0.3	7th	10-17	Original
7-156.92.19	Original	9-12.0.3.1	9th	10-18	Original
7-156.93	9th	9-12.1	2nd	10-19	Original
7-156.94	3rd	9-13	1st	10-20	1st
7-156.95	9th	9-14	2nd	10-21	Original
7-156.96	2nd	9-15	2nd	10-21.1	Original
7-156.97	Original	9-16	2nd	10-21.2	Original
7-156.98	Original	9-17	1st	11-1	1st
7-157	1st	9-18	2nd	11-2	Original
7-158	1st	9-19	4th	11-3	Original
7-159	1st	9-19.1	Original	11-4	Original
7-160	1st	9-20	2nd	11-5	Original
7-161	1st	9-21	1st	11-6	Original

All BellSouth marks contained herein and as set forth in the trademarks and servicemarks section of this Tariff are owned by BellSouth Intellectual Property Corporation.

*New or Revised

****

ACCESS SERVICE
CHECK SHEET

Page	Number of Revision Except as Indicated	Page	Number of Revision Except as Indicated	Page	Number of Revision Except as Indicated
11-7	Original	12-39	6th	12-61	Original
11-8	Original	12-39.1	2nd	12-62	Original
11-9	Original	12-39.2	2nd	12-63	Original
11-10	1st	12-39.3	2nd	12-64	Original
11-11	1st	12-40	3rd	12-65	Original
11-12	Original	12.40.1	Original	12-66	Original
11-13	1st	12-41	Original	12-67	Original
11-14	1st	12-42	Original	12-68	Original
11-15	Original	12-43	Original	12-69	Original
11-16	Original	12-43.1	Original	12-70	Original
12-1	Original	12-43.2	Original	12-71	Original
12-2	1st	12-44	Original	12-72	Original
12-3	1st	12-44.1	3rd	12-73	Original
12-4	1st	12-44.2	1st	12-74	Original
12-5	1st	12-44.3	2nd	12-75	Original
12-6	1st	12-44.4	1st	12-76	Original
12-7	2nd	12-44.5	1st	12-77	Original
12-8	1st	12-44.6	1st	12-78	Original
12-9	1st	12-44.7	1st	12-79	Original
12-10	3rd	12-44.8	1st	12-80	Original
12-11	1st	12-44.9	1st	12-81	Original
12-12	1st	12-45	4th*	12-82	Original
12-13	4th	12-46	4th	12-83	Original
12-14	2nd	12-47	3rd	12-84	Original
12-15	1st	12-47.1	2nd	12-85	Original
12-16	1st	12-47.2	2nd	12-86	Original
12-17	1st	12-48	2nd	12-87	Original
12-18	1st	12-48.1	1st	12-88	Original
12-19	Original	12-48.2	1st	12-89	Original
12-20	1st	12-49	2nd	12-90	Original
12-21	Original	12-50	2nd	12-91	Original
12-22	1st	12-51	2nd	12-92	Original
12-23	1st	12-52	1st	12-93	Original
12-24	Original	12-53	3rd	12-94	1st
12-25	Original	12-54	2nd	12-95	1st
12-26	2nd	12-54.1	1st	12-96	1st
12-27	1st	12-55	3rd	12-97	1st
12-28	3rd	12-56	3rd	12-98	1st
12-29	Original	12-57	2nd	12-99	1st
12-30	3rd	12-57.1	2nd	12-100	1st
12-31	Original	12-57.2	2nd	12-101	1st
12-32	1st	12-57.3	1st	12-102	1st
12-33	4th	12-58	3rd	12-103	1st
12-34	Original	12-58.1	1st	12-104	1st
12-35	Original	12-58.2	1st	12-105	1st
12-36	Original	12-58.3	1st	12-106	1st
12-37	1st	12-59	1st	12-107	1st
12-38	Original	12-60	Original		

All BellSouth marks contained herein and as set forth in the trademarks and servicemarks section of this Tariff are owned by BellSouth Intellectual Property Corporation.

*New or Revised Page

****

ACCESS SERVICE

CHECK SHEET

Page	Number of Revision Except as Indicated	Page	Number of Revision Except as Indicated	Page	Number of Revision Except as Indicated
13-1	4th	13-44	3rd	13-76.3	2nd
13-1.1	3rd	13-45	4th	13-76.4	1st
13-2	5th#	13-45.1	2nd	13-76.5	2nd
13-3	1st	13-45.2	Original	13-76.6	Original
13-4	1st	13-46	5th	13-76.7	1st
13-5	4th	13-47	4th	13-76.8	2nd
13-6	6th	13-48	1st	13-76.9	3rd
13-7	5th	13-49	1st	13-76.10	1st
13-8	6th	13-50	2nd	13-76.11	1st
13-9	6th#	13-51	1st	13-76.12	1st
13-10	7th	13-52	1st	13-76.13	2nd
13-10.1	5th	13-53	1st	13-76.14	Original
13-11	11th	13-54	1st	13-76.15	Original
13-11.1	5th	13-55	1st	13-76.16	2nd*
13-12	12th	13-56	Original	13-76.16.1	Original*
13-12.1	5th	13-57	Original	13-76.17	2nd*
13-13	9th	13-58	Original	13-76.17.1	Original*
13-14	7th	13-59	Original	13-76.18	1st*
13-15	3rd	13-60	1st	13-76.18.1	Original*
13-16	4th	13-61	5th	13-76.18.2	Original*
13-17	3rd	13-62	3rd	13-76.18.3	Original*
13-18	Original	13-63	3rd	13-77	Original
13-19	Original	13-64	3rd	14-1	2nd
13-20	Original	13-65	2nd	15-1	1st
13-21	Original	13-66	2nd	15-2	1st
13-22	Original	13-67	3rd	15-3	1st
13-23	1st	13-68	2nd	15-4	1st
13-24	Original	13-69	5th	15-5	Original
13-25	Original	13-70	4th	15-6	1st
13-26	2nd	13-71	5th	15-7	1st
13-27	4th	13-72	1st	15-8	1st
13-28	4th	13-73	1st	15-9	1st
13-29	4th	13-74	2nd	15-10	Original
13-30	1st	13-74.1	4th	15-11	1st
13-31	1st	13-74.2	3rd#	15-12	1st
13-32	1st	13-74.3	3rd	15-13	1st
13-33	1st	13-74.4	4th	15-14	1st
13-34	1st	13-74.5	3rd	15-15	1st
13-35	1st	13-74.6	3rd	15-16	Original
13-36	1st	13-74.7	3rd	15-17	Original
13-37	1st	13-74.8	3rd	15-18	1st
13-38	1st	13-74.9	3rd	15-19	1st
13-39	1st	13-74.10	3rd	15-20	1st
13-40	1st	13-75	8th#		
13-41	1st	13-76	2nd		
13-42	1st	13-76.1	5th		
13-43	2nd	13-76.2	5th		

All BellSouth marks contained herein and as set forth in the trademarks and servicemarks section of this Tariff are owned by BellSouth Intellectual Property Corporation.

*New or Revised Page

****

#The material on this page is not revised in this filing. The check sheet only is being changed to reflect the correct revision number.

ACCESS SERVICE

CHECK SHEET

Page	Number of Revision Except as Indicated	Page	Number of Revision Except as Indicated	Page	Number of Revision Except as Indicated
16-1	2nd				
16-1.1	Original				
16-2	2nd				
16-3	1st				
17-1	Original				
18-1	4th				
18-2	5th				
18-3	14th*				
18-4	1st				
18-5	1st				
18-6	1st				
18-7	17th*				
18-8	1st				
18-9	1st				
18-10	1st				
18-11	2nd				
18-12	2nd				
18-13	3rd				
18-14	3rd				
18-15	2nd				
18-16	Original				
19-1	8th				

All BellSouth marks contained herein and as set forth in the trademarks and servicemarks section of this Tariff are owned by BellSouth Intellectual Property Corporation.
****

ACCESS SERVICE
CHECK SHEET

Page	Number of Revision Except as Indicated	Page	Number of Revision Except as Indicated	Page	Number of Revision Except as Indicated
19-2	4th	20-32	7th	21-13	2nd
19-3	5th	20-33	6th	21-14	1st
19-3.1	5th	20-34	7th	21-15	1st
19-3.2	5th	20-35	5th	21-16	2nd
19-4	3rd	20-36	7th	21-17	6th*
19-5	8th	20-36.1	6th	21-17.1	1st*
19-6	7th	20-37	6th	21-18	1st
19-7	4th	20-37.1	6th	21-18.1	Original
19-8	16th	20-38	8th	21-18.1.1	Original
20-1	11th	20-38.1	6th	21-18.1.2	Original
20-1.1	4th	20-39	17th	21-18.2	1st
20-2	8th	20-39.1	5th	21-18.3	Original
20-2.1	5th	21-1	7th	21-19	1st
20-3	5th	21-1.0.1	1st	21-19.1	Original
20-4	6th	21-1.0.2	Original	21-20	1st
20-4.1	3rd	21-1.0.3	Original	21-21	1st
20-5	6th	21-1.1	4th	21-22	1st
20-6	7th	21-1.1.1	Original	21-23	9th
20-7	5th	21-1.2	Original	21-23.1	1st
20-8	4th	21-2	3rd	21-23.2	Original
20-9	4th	21-2.1	Original	21-24	Original
20-10	4th	21-3	1st	21-25	Original
20-11	5th	21-4	13th	21-25.1	Original
20-12	7th	21-4.1	Original	21-26	4th*
20-13	6th	21-5	6th	21-26.0.1	Original
20-14	4th	21-5.0.1	Original	21-26.0.2	Original
20-15	5th	21-5.1	1st	21-26.1	Original
20-16	4th	21-5.2	Original	21-27	3rd
20-17	5th	21-5.3	Original	21-27.1	1st
20-18	4th	21-5.4	Original	21-28	1st
20-19	4th	21-5.5	Original	21-29	4th
20-20	5th	21-6	1st	21-29.1	1st
20-21	4th	21-7	6th	21-29.2	Original
20-22	4th	21-7.0.1	Original	21-29.3	Original
20-23	6th	21-7.1	1st	21-30	1st
20-23.1	3rd	21-7.1.1	Original	21-30.1	Original
20-24	11th	21-7.2	Original	21-31	Original
20-25	7th	21-8	6th	21-32	4th
20-26	7th	21-8.1	1st	21-32.0.1	4th
20-27	6th	21-8.2	Original	21-32.1	1st
20-27.1	4th	21-8.3	Original	21-33	1st
20-28	6th	21-8.4	Original	21-34	2nd
20-28.1	5th	21-8.5	Original	21-34.1	1st
20-29	12th	21-9	2nd	21-35	1st
20-29.1	6th	21-10	2nd	21-35.1	Original
20-30	10th	21-11	2nd	21-35.2	Original
20-30.1	7th	21-11.1	Original	21-35.3	Original
20-31	7th	21-12	1st	21-35.4	Original

All BellSouth marks contained herein and as set forth in the trademarks and servicemarks section of this Tariff are owned by BellSouth Intellectual Property Corporation.

*New or Revised Page

****

ACCESS SERVICE
CHECK SHEET

Page	Number of Revision Except as Indicated	Page	Number of Revision Except as Indicated	Page	Number of Revision Except as Indicated
21-36	1st	21-41.6	3rd*	21-43.4	1st*
21-37	Original	21-41.6.1	Original*	21-43.4.1	Original*
21-38	1st	21-41.7	3rd*	21-43.5	3rd*
21-38.1	2nd	21-41.7.1	Original*	21-43.6	2nd
21-38.2	2nd	21-41.8	3rd*	21-43.7	1st*
21-38.3	2nd	21-41.8.1	Original*	21-43.7.1	Original*
21-38.4	2nd	21-41.9	5th*	21-43.8	3rd*
21-38.5	3rd*	21-41.9.1	2nd	21-43.9	3rd
21-38.6	3rd*	21-41.9.2	2nd	21-43.10	1st*
21-38.7	3rd*	21-41.9.3	2nd	21-43.10.1	Original*
21-39	5th*	21-41.9.4	2nd	21-43.11	3rd*
21-39.1	2nd	21-41.9.5	2nd	21-43.12	2nd
21-39.2	2nd	21-41.9.6	3rd	21-43.13	1st*
21-39.3	2nd	21-41.9.7	1st	21-43.13.1	Original*
21-39.4	3rd	21-41.9.8	1st	21-43.14	3rd*
21-39.5	2nd	21-41.10	1st	21-43.15	2nd
21-39.6	3rd	21-41.11	2nd	21-44	5th
21-39.7	1st	21-41.12	2nd	21-45	2nd
21-39.8	1st	21-41.13	2nd	21-45.1	1st
21-40	1st	21-41.14	2nd	21-46	1st
21-40.1	2nd	21-41.15	3rd*	21-46.1	Original
21-40.2	2nd	21-41.15.1	Original*	21-46.2	Original
21-40.3	2nd	21-41.16	3rd*	21-46.3	Original
21-40.4	2nd	21-41.16.1	Original*	21-47	Original
21-40.5	3rd*	21-41.17	3rd*	21-48	1st
21-40.6	3rd*	21-41.17.1	Original*	21-49	1st
21-40.7	3rd*	21-41.18	5th*	21-49.1	Original
21-41	5th*	21-41.19	2nd	21-49.2	Original
21-41.0.1	2nd	21-41.20	3rd	21-50	1st
21-41.0.2	2nd	21-41.21	2nd	21-51	1st
21-41.0.3	2nd	21-41.22	2nd	21-51.1	Original
21-41.0.4	2nd	21-41.23	2nd	21-51.2	Original
21-41.0.5	2nd	21-41.24	3rd	21-52	1st
21-41.0.6	3rd	21-41.24.1	1st	21.53	1st
21-41.0.6.1	1st	21-41.24.2	1st	21-53.1	1st
21-41.0.6.2	1st	21-41.25	Original	21-53.0.1	4th
21-41.0.7	Original	21-41.26	3rd*	21-54	1st
21-41.0.8	3rd*	21-41.27	Original	21-55	Original
21-41.0.9	Original	21-41.28	3rd*	21-56	Original
21-41.0.10	3rd*	21-41.29	Original	21-57	1st
21-41.0.11	Original	21-41.30	3rd*	21-58	1st
21-41.0.12	3rd*	21-41.31	Original	21-59	5th*
21-41.0.13	Original	21-41.32	3rd*	21-59.1	2nd
21-41.0.14	3rd*	21-42	3rd	21-59.2	2nd
21-41.1	1st	21-42.1	Original	21-59.2.1	Original
21-41.2	2nd	21-43	1st	21-59.3	2nd
21-41.3	2nd	21-43.1	Original	21-59.4	2nd
21-41.4	2nd	21-43.2	Original	21-59.5	3rd
21-41.5	2nd	21-43.3	Original		

All BellSouth marks contained herein and as set forth in the trademarks and servicemarks section of this Tariff are owned by BellSouth Intellectual Property Corporation.

*New or Revised Page

****

ACCESS SERVICE
CHECK SHEET

Page	Number of Revision Except as Indicated	Page	Number of Revision Except as Indicated	Page	Number of Revision Except as Indicated
21-60	1st				
21-60.0.1	3rd*				
21-60.0.2	Original				
21-60.0.3	Original				
21-60.0.4	1st*				
21-60.1	5th*				
21-60.1.1	2nd				
21-60.1.2	2nd				
21-60.1.2.1	Original				
21-60.1.3	2nd				
21-60.1.4	2nd				
21-60.1.5	3rd				
21-60.2	1st				
21-60.3	3rd*				
21-60.4	Original				
21-60.5	Original				
21-60.6	1st*				
21-61	2nd				
21-61.1	Original				
21-62	Original				
21-62.1	3rd*				
21-62.2	3rd*				
21-63	2nd				
21-64	Original				
21-65	Original				
21-66	Original				
21-67	Original				
21-68	1st				
21-68.1	2nd				
21-69	Original				
21-70	2nd				
21-71	Original				
22-1	1st				
22-2	1st				
22-3	1st				
22-4	1st				

All BellSouth marks contained herein and as set forth in the trademarks and servicemarks section of this Tariff are owned by BellSouth Intellectual Property Corporation.

*New or Revised Page

****

ACCESS SERVICE
CHECK SHEET

Page	Number of Revision Except as Indicated	Page	Number of Revision Except as Indicated	Page	Number of Revision Except as Indicated
22-5	1st	23-29	1st*	23-52	Original
22-6	1st	23-30	1st*	23-53	Original
22-7	1st	23-31	1st*	23-54	Original
22-8	1st	23-32	1st*	23-55	1st
22-9	1st	23-33	1st*	23-56	2nd
22-10	1st	23-34	1st*	23-57	1st
22-11	1st	23-35	1st*	23-58	1st
22-12	1st	23-36	1st	23-59	1st
22-13	1st	23-36.1	1st	23-60	Original
22-14	1st	23-36.2	1st	23-61	1st
22-15	1st	23-36.3	1st	23-62	1st
22-16	1st	23-36.3.1	Original	23-63	2nd
22-17	1st	23-36.4	1st	23-64	2nd
22-18	1st	23-36.5	Original	23-65	Original
22-19	1st	23-36.6	Original	23-66	Original
22-20	1st	23-36.7	Original	23-67	Original
22-21	1st	23-36.8	Original	23-68	Original
22-22	1st	23-36.9	Original	23-69	Original
22-23	1st	23-36.10	Original	23-70	Original
22-24	1st	23-36.11	Original	23-71	Original
22-25	1st	23-36.12	Original	23-72	1st
22-26	1st	23-36.13	Original	23-73	Original
22-27	1st	23-36.14	Original	23-74	Original
23-1	1st	23-36.15	Original	23-75	Original
23-2	1st	23-36.16	Original	23-76	Original
23-3	3rd*	23-36.17	Original	23-77	Original
23-3.1	Original*	23-36.18	Original	23-78	Original
23-4	Original	23-36.19	Original	23-79	Original
23-5	1st	23-36.20	Original	23-80	1st
23-6	Original	23-36.21	Original	23-81	1st
23-7	1st	23-36.22	Original	23-82	Original
23-8	1st	23-36.23	Original	23-83	1st
23-9	1st	23-36.24	Original	23-84	1st
23-10	1st	23-36.25	Original	23-85	Original
23-11	1st	23-36.26	Original	23-86	Original
23-12	Original	23-36.27	Original	23-87	Original
23-13	Original	23-36.28	Original	23-88	Original
23-14	1st	23-36.29	Original	23-89	Original
23-15	1st	23-37	1st	23-90	Original
23-16	1st	23-38	Original	23-91	Original
23-17	1st	23-39	Original	23-92	Original
23-18	Original	23-40	Original	23-93	1st
23-19	Original	23-41	1st	23-94	1st
23-20	Original	23-42	Original	23-95	1st
23-21	Original	23-43	Original	23-96	Original
23-22	Original	23-44	Original	23-97	Original
23-23	Original	23-45	Original	23-98	Original
23-24	Original	23-46	Original	23-99	1st
23-24.1	1st	23-47	1st		
23-25	Original	23-48	Original		
23-26	Original	23-49	Original		
23-27	1st	23-50	Original		
23-28	1st	23-51	Original		

All BellSouth marks contained herein and as set forth in the trademarks and servicemarks section of this Tariff are owned by BellSouth Intellectual Property Corporation.

*New or Revised Page

****

ACCESS SERVICE

CHECK SHEET

Page	Number of Revision Except as Indicated	Page	Number of Revision Except as Indicated	Page	Number of Revision Except as Indicated
23-100	1st	23-138	Original		
23-101	Original	23-139	Original		
23-102	Original	23-140	Original		
23-103	1st	23-141	2nd		
23-104	1st	23-142	1st		
23-105	Original	23-143	1st		
23-106	Original				
23-107	Original				
23-108	1st				
23-109	1st				
23-110	Original				
23-111	Original				
23-112	1st				
23-113	1st*				
23-114	Original				
23-115	Original				
23-116	Original				
23-117	Original				
23-118	Original				
23-119	Original				
23-120	Original				
23-121	Original				
23-122	Original				
23-123	Original				
23-124	Original				
23-125	Original				
23-126	Original				
23-127	Original				
23-128	Original				
23-129	Original				
23-130	1st				
23-131	Original				
23-132	1st				
23-133	1st				
23-134	Original				
23-135	Original				
23-136	1st				
23-137	1st				

All BellSouth marks contained herein and as set forth in the trademarks and servicemarks section of this Tariff are owned by BellSouth Intellectual Property Corporation.

****

*New or Revised Page

ACCESS SERVICE
CHECK SHEET

Page	Number of Revision Except as Indicated	Page	Number of Revision Except as Indicated	Page	Number of Revision Except as Indicated
23-144	1st	23-195	Original	23-246	Original
23-145	Original	23-196	Original	23-247	Original
23-146	1st*	23-197	Original	23-248	Original
23-147	Original	23-198	Original	23-249	Original
23-148	Original	23-199	Original	23-250	Original
23-149	Original	23-200	Original	23-251	Original
23-150	Original	23-201	Original	23-252	Original
23-151	Original	23-202	Original	23-253	Original
23-152	Original	23-203	Original	23-254	Original
23-153	Original	23-204	Original	23-255	Original
23-154	Original	23-205	Original	23-256	Original
23-155	1st	23-206	Original	23-257	Original
23-156	Original	23-207	Original	23-258	Original
23-157	1st	23-208	Original	23-259	Original
23-158	Original	23-209	Original	23-260	Original
23-159	Original	23-210	Original	23-261	Original
23-160	1st	23-211	Original	23-262	Original
23-161	1st	23-212	Original	23-263	Original
23-162	1st	23-213	Original	23-264	Original
23-163	1st	23-214	Original	23-265	Original
23-164	1st	23-215	Original	23-266	Original
23-165	Original	23-216	Original	23-267	Original
23-166	1st	23-217	Original	23-268	Original
23-167	1st	23-218	Original	23-269	Original
23-168	1st	23-219	Original	23-270	Original
23-169	1st	23-220	Original	23-271	Original
23-170	1st	23-221	Original	23-272	Original
23-171	1st	23-222	2nd*	23-273	Original
23-172	1st	23-223	Original	23-274	Original
23-173	1st	23-224	Original	23-275	Original
23-174	1st	23-225	Original	23-276	Original
23-175	1st	23-226	Original	23-277	Original
23-176	1st	23-227	Original	23-278	Original
23-177	1st	23-228	Original	23-278.1	Original*
23-178	1st	23-229	Original	23-279	Original
23-179	1st	23-230	Original	23-280	Original
23-180	1st	23-231	Original	23-281	1st
23-181	1st	23-232	Original	23-282	Original
23-182	1st	23-233	Original	23-283	Original
23-183	1st	23-234	Original	23-284	1st
23-184	1st	23-235	Original	23-285	1st
23-185	1st	23-236	Original	23-286	1st
23-186	Original	23-237	Original	23-287	Original
23-187	Original	23-238	Original	23-288	Original
23-188	Original	23-239	Original	23-289	1st
23-189	Original	23-240	Original	23-290	Original
23-190	Original	23-241	Original		
23-191	Original	23-242	Original		
23-192	Original	23-243	Original		
23-193	Original	23-244	Original		
23-194	Original	23-245	Original		

New or Revised Page **********

All BellSouth marks contained herein and as set forth in the trademarks and servicemarks section of this Tariff are owned by BellSouth Intellectual Property Corporation.

ACCESS SERVICE
CHECK SHEET

Page	Number of Revision Except as Indicated	Page	Number of Revision Except as Indicated	Page	Number of Revision Except as Indicated
23-291	Original	23-337	Original	23-379	Original
23-292	Original	23-338	Original	23-380	Original
23-293	Original	23-339	Original	23-381	Original
23-294	Original	23-340	Original	23-381.1	Original*
23-295	Original	23-341	1st*	23-381.2	Original*
23-296	Original	23-341.1	Original*	23-382	2nd*
23-297	Original	23-341.2	Original*	23-383	2nd*
23-298	1st*	23-342	1st*	23-384	Original
23-299	1st*	23-342	1st*	23-385	1st*
23-300	Original	23-343.1	Original*	23-386	Original
23-301	Original	23-344	Original	23-387	Original
23-302	Original	23-345	1st	23-388	Original
23-303	Original	23-346	1st	23-389	Original
23-304	Original	23-347	Original	23-390	Original
23-305	Original	23-348	Original	23-391	Original
23-306	1st*	23-349	Original	23-392	Original
23-306.1	Original*	23-350	1st*	23-393	Original
23-306.2	Original*	23-351	1st*	23-394	Original
23-307	1st*	23-352	Original	23-395	Original
23-308	Original	23-353	1st	23-396	Original
23-309	Original	23-354	1st	23-397	Original
23-310	Original	23-355	2nd*	23-398	Original
23-311	Original	23-355.1	Original*	23-399	Original
23-312	Original	23-355.2	Original*	23-400	Original
23-313	Original	23-356	2nd*	23-401	1st
23-314	Original	23-357	Original	23-402	Original
23-315	Original	23-358	Original	23-403	Original
23-316	Original	23-359	Original	23-404	Original
23-317	Original	23-360	Original	23-405	Original
23-318	Original	23-361	Original	23-406	1st*
23-319	Original	23-362	Original	23-407	Original
23-320	Original	23-363	Original	23-408	1st*
23-321	Original	23-364	Original	23-409	1st*
23-322	Original	23-365	Original	23-410	2nd*
23-323	Original	23-366	Original	23-410.1	Original*
23-324	Original	23-367	Original	23-411	Original
23-325	1st*	23-368	Original	23-412	Original
23-325.1	Original*	23-369	Original	23-413	Original
23-325.2	Original*	23-369.1	Original*	23-414	Original
23-326	1st*	23-369.2	Original*	23-415	2nd
23-327	1st*	23-370	2nd*	23-416	Original
23-328	Original	23-371	2nd*	23-417	Original
23-329	Original	23-372	1st*	23-418	Original
23-330	Original	23-372.1	Original*	23-419	Original
23-331	Original	23-373	Original		
23-332	Original	23-374	Original		
23-333	Original	23-375	Original		
23-334	Original	23-376	Original		
23-335	Original	23-377	Original		
23-336	Original	23-378	Original		

.

All BellSouth marks contained herein and as set forth in the trademarks and servicemarks section of this Tariff are owned by BellSouth Intellectual Property Corporation.

*New or Revised Page

****

ACCESS SERVICE
CHECK SHEET

Page	Number of Revision Except as Indicated	Page	Number of Revision Except as Indicated	Page	Number of Revision Except as Indicated
23-420	1st	23-456	Original	23-494	Original
23-420.1	Original	23-457	Original	23-495	1st
23-420.2	Original	23-458	Original	23-495.1	1st*
23-421	Original	23-459	Original	23-495.2	1st*
23-422	Original	23-460	1st	23-496	Original
23-423	Original	23-460.1	Original	23-497	Original
23-424	Original	23-460.2	Original	23-498	Original
23-425	1st	23-461	Original	23-499	Original
23-425.1	Original	23-462	Original		
23-425.2	Original	23-463	Original		
23-426	Original	23-464	Original		
23-427	Original	23-465	1st		
23-428	Original	23-465.1	1st*		
23-429	Original	23-465.2	1st*		
23-430	1st	23-466	Original		
23-430.1	Original	23-467	1st		
23-430.2	Original	23-468	Original		
23-431	Original	23-469	Original		
23-432	Original	23-470	1st		
23-433	Original	23-470.1	1st*		
23-434	Original	23-470.2	1st*		
23-435	1st	23-471	Original		
23-435.1	Original	23-472	Original		
23-435.2	Original	23-473	Original		
23-436	Original	23-474	Original		
23-437	Original	23-475	1st		
23-438	Original	23-475.1	1st*		
23-439	Original	23-475.2	1st*		
23-440	1st	23-476	Original		
23-440.1	Original	23-477	Original		
23-440.2	Original	23-478	Original		
23-441	Original	23-479	Original		
23-442	Original	23-480	1st		
23-443	Original	23-480.1	1st*		
23-444	Original	23-480.2	1st*		
23-445	1st	23-481	Original		
23-445.1	Original	23-482	Original		
23-445.2	Original	23-483	Original		
23-446	Original	23-484	Original		
23-447	Original	23-485	1st		
23-448	Original	23-485.1	1st*		
23-449	Original	23-485.2	1st*		
23-450	1st	23-486	Original		
23-450.1	Original	23-487	Original		
23-450.2	Original	23-488	Original		
23-451	Original	23-489	Original		
23-452	Original	23-490	1st		
23-453	Original	23-490.1	1st*		
23-454	Original	23-490.2	1st*		
23-455	1st	23-491	Original		
23-455.1	Original	23-492	Original		
23-455.2	Original	23-493	Original		

****

ACCESS SERVICE
CHECK SHEET

Page	Number of Revision Except as Indicated	Page	Number of Revision Except as Indicated	Page	Number of Revision Except as Indicated
23-500	1st	23-535.1	1st	23-575.3	Original
23-500.1	1st	23-535.2	1st	23-575.4	Original
23-500.2	1st	23-536	Original	23-575.5	Original
23-501	Original	23-537	Original	23-575.6	Original
23-502	Original	23-538	Original	23-575.7	Original
23-503	Original	23-539	Original	23-575.8	Original
23-504	Original	23-540	1st	23-575.9	Original
23-505	1st	23-540.1	1st	23-575.10	Original
23-505.1	1st	23-540.2	1st	23-575.11	Original
23-505.2	1st	23-541	Original	23-575.12	Original
23-506	Original	23-542	Original	23-575.13	Original
23-507	Original	23-543	Original	23-575.14	Original
23-508	Original	23-544	Original	23-575.15	Original
23-509	Original	23-545	1st	23-575.16	Original
23-510	1st	23-545.1	1st	23-575.17	Original
23-510.1	1st	23-545.2	1st	23-575.18	Original
23-510.2	1st	23-546	Original	23-575.19	Original
23-511	Original	23-547	Original	23-576	6th*
23-512	Original	23-548	Original	23-577	3rd
23-513	Original	23-549	Original	23-578	4th
23-514	Original	23-550	1st	23-578.1	2nd
23-515	1st	23-550.1	1st	23-578.2	2nd
23-515.1	1st	23-550.2	1st	23-578.3	3rd*
23-515.2	1st	23-551	Original	23-578.4	Original
23-516	Original	23-552	Original	23-578.5	Original
23-517	Original	23-553	Original	23-578.6	Original
23-518	Original	23-554	Original	23-579	2nd
23-519	Original	23-555	Original	23-579.0.1	Original
23-520	1st	23-556	Original	23-579.1	Original
23-520.1	1st	23-557	Original	23-579.1.1	Original
23-520.2	1st	23-558	Original	23-579.2	Original
23-521	Original	23-559	Original	23-580	2nd
23-522	Original	23-560	Original	23-580.1	1st
23-523	Original	23-561	Original	23-580.2	Original
23-524	Original	23-562	Original	23-580.3	Original
23-525	1st	23-563	Original	23-580.4	Original
23-525.1	1st	23-564	Original	23-580.5	Original
23-525.2	1st	23-565	Original	23-581	Original
23-526	Original	23-566	Original	23-582	Original
23-527	Original	23-567	Original	23-583	Original
23-528	Original	23-568	Original	23-584	2nd
23-529	Original	23-569	Original	23-584.1	Original
23-530	1st	23-570	Original	23-584.2	Original
23-530.1	1st	23-571	Original	23-585	2nd
23-530.2	1st	23-572	Original	23-585.1	Original
23-531	Original	23-573	Original	23-585.2	Original
23-532	Original	23-574	Original	23-586	1st
23-533	Original	23-575	Original		
23-534	Original	23-575.1	Original		
23-535	1st	23-575.2	Original		

All BellSouth marks contained herein and as set forth in the trademarks and servicemarks section of this Tariff are owned by BellSouth Intellectual Property Corporation.

*New or Revised Page

****

ACCESS SERVICE
CHECK SHEET

Page	Number of Revision Except as Indicated	Page	Number of Revision Except as Indicated	Page	Number of Revision Except as Indicated
23-586.1	1st	23-589.8.1	Original*	23-591.9	1st
23-586.2	1st	23-589.9	5th*	23-591.10	1st*
23-586.3	1st	23-589.9.1	1st	23-591.10.1	Original*
23-586.4	1st	23-589.9.2	1st	23-591.11	2nd*
23-586.5	2nd*	23-589.9.3	1st	23-591.12	1st
23-586.6	2nd*	23-589.9.4	1st	23-591.13	1st*
23-586.7	2nd*	23-589.9.5	1st	23-591.13.1	Original*
23-587	5th*	23-589.9.6	2nd	23-591.14	2nd*
23-587.1	1st	23-589.9.7	1st	23-591.15	1st
23-587.2	1st	23-589.9.8	1st	23-592	4th
23-587.3	1st	23-589.10	2nd	23-593	4th*
23-587.4	2nd	23-589.11	1st	23-593.1	1st
23-587.5	1st	23-589.12	1st	23-593.2	1st
23-587.6	2nd	23-589.13	1st	23-593.3	1st
23-587.7	1st	23-589.14	1st	23-593.4	1st
23-587.8	1st	23-589.15	2nd*	23-593.5	2nd
23-588	1st	23-589.15.1	Original*	23-594	1st
23-588.1	1st	23-589.16	2nd*	23-594.0.1	3rd*
23-588.2	1st	23-589.16.1	Original*	23-594.0.2	Original
23-588.3	1st	23-589.17	2nd*	23-594.0.3	Original
23-588.4	1st	23-589.17.1	Original*	23-594.0.4	1st*
23-588.5	2nd*	23-589.18	5th*	23-594.1	4th*
23-588.6	2nd*	23-589.19	1st	23.594.1.1	1st
23-588.7	2nd*	23-589.20	2nd	23.594.1.2	1st
23-589	5th*	23-589.21	1st	23.594.1.3	1st
23-589.0.1	1st	23-589.22	1st	23.594.1.4	1st
23-589.0.2	1st	23-589.23	1st	23.594.1.5	2nd
23-589.0.3	1st	23-589.24	2nd	23-594.2	1st
23-589.0.4	1st	23-589.24.1	1st	23-594.3	3rd*
23-589.0.5	1st	23-589.24.2	1st	23-594.4	Original
23-589.0.6	2nd	23-589.25	Original	23-594.5	Original
23-589.0.6.1	1st	23-589.26	3rd*	23-594.6	1st*
23-589.0.6.2	1st	23-589.27	Original	23-595	2nd
23-589.0.7	Original	23-589.28	3rd*	23-595.1	Original
23-589.0.8	3rd*	23-589.29	Original	23-596	2nd
23-589.0.9	Original	23-589.30	3rd*	23-596.1	2nd*
23-589.0.10	3rd*	23-589.31	Original	23-596.2	2nd*
23-589.0.11	Original	23-589.32	3rd*	23-597	2nd
23-589.0.12	3rd*	23-590	2nd	23-597.1	1st
23-589.0.13	Original	23-590.1	Original	23-597.2	Original
23-589.0.14	3rd*	23-591	1st	23-598	2nd
23-589.1	1st	23-591.1	Original	23-599	3rd
23-589.2	1st	23-591.2	Original		
23-589.3	1st	23-591.3	Original		
23-589.4	1st	23-591.4	1st*		
23-589.5	1st	23-591.4.1	Original*		
23-589.6	2nd*	23-591.5	2nd*		
23-589.6.1	Original*	23-591.6	1st		
23-589.7	2nd*	23-591.7	1st*		
23-589.7.1	Original*	23-591.7.1	Original*		
23-589.8	2nd*	23-591.8	2nd*		

All BellSouth marks contained herein and as set forth in the trademarks and servicemarks section of this Tariff are owned by BellSouth Intellectual Property Corporation.

*New or Revised Page

ACCESS SERVICE
CHECK SHEET

Page	Number of Revision Except as Indicated	Page	Number of Revision Except as Indicated	Page	Number of Revision Except as Indicated
23-600	2nd	24-8	2nd	25-15	Original
23-601	4th	24-9	Original	25-16	Original
23-602	6th*	24-10	2nd	25-17	Original
23-602.1	3rd	24-11	2nd	25-18	Original
23-602.2	Original	24-12	2nd	25-19	Original
23-603	4th	24-13	2nd	25-20	Original
23-603.1	1st	24-13.1	Original	25-21	Original
23-604	3rd	24-14	1st	25-22	Original
23-604.0.1	2nd	24-14.1	Original	25-23	Original
23-604.1	3rd	24-15	1st	25-24	Original
23-604.1.1	Original	24-16	2nd	25-25	Original
23-604.1.2	Original	24-17	2nd	25-26	Original
23-604.2	2nd	24-18	2nd	25-27	Original
23-604.2.1	Original	24-19	1st	25-28	Original
23-604.2.1.1	Original	24-19.1	Original	25-29	Original
23-604.2.2	Original	24-20	2nd	25-30	Original
23-604.3	1st	24-21	2nd	25-31	Original
23-605	5th	24-22	1st	25-32	Original
23-605.1	1st	24-23	2nd	25-33	1st
23-605.1.1	Original	24-24	1st	25-34	Original
23-605.1.2	Original	24-25	Original	25-35	Original
23-605.1.3	Original	24-26	2nd	25-36	Original
23-605.2	2nd	24-27	2nd	25-37	Original
23-605.2.1	Original	24-27.1	Original	25-38	Original
23-605.3	1st	24-28	1st	25-39	Original
23-605.4	1st	24-29	1st	25-40	Original
23-606	3rd	24-30	2nd	25-41	Original
23-606.0.1	Original	24-31	2nd	25-42	Original
23-606.1	1st	24-31.1	Original	25-43	Original
23-607	2nd	24-32	Original	25-44	1st
23-608	2nd	24-33	Original	25-45	Original
23-609	1st	24-34	Original	25-46	Original
23-610	2nd	24-35	Original	25-47	Original
23-611	1st	24-36	Original	25-48	Original
23-612	2nd	24-37	Original	25-49	Original
23-612.1	1st	24-38	Original	25-50	Original
23-612.2	Original	24-39	Original	25-51	Original
23-613	2nd	25-1	Original	25-52	Original
23-613.1	2nd	25-2	1st	25-53	Original
23-613.2	Original	25-3	Original	25-54	Original
23-614	4th	25-4	Original	25-55	Original
23-614.1	1st	25-5	Original	25-56	Original
23-614.2	1st	25-6	Original	25-57	Original
23-614.3	1st	25-7	Original	25-58	Original
24-1	2nd	25-8	Original	25-59	Original
24-2	1st	25-9	Original	25-60	Original
24-3	2nd	25-10	Original	25-61	Original
24-4	2nd	25-11	1st		
24-5	1st	25-12	Original		
24-6	2nd	25-13	Original		
24-7	1st	25-14	Original		

All BellSouth marks contained herein and as set forth in the trademarks and servicemarks section of this Tariff are owned by BellSouth Intellectual Property Corporation.

ACCESS SERVICE
CHECK SHEET

PAGE	Number of Revision Except as INDICATED	PAGE	Number of Revision Except as INDICATED	PAGE	Number of Revision Except as INDICATED
25-62	Original	25-90	Original	25-140	Original
25-62.1	Original	25-91	Original	25-141	Original
25-62.2	Original	25-92	Original	25-142	Original
25-62.3	Original	25-93	Original	25-143	Original
25-62.4	1st	25-94	Original	25-144	Original
25-62.5	1st	25-95	Original	25-145	Original
25-62.6	2nd	25-96	Original	25-146	Original
25-62.7	2nd	25-97	Original	25-147	Original
25-62.8	1st	25-98	Original	25-148	Original
25-62.9	2nd	25-99	Original	25-149	Original
25-62.10	3rd	25-100	Original	25-150	Original
25-62.11	2nd	25-101	1st	25-151	Original
25-62.12	2nd	25-102	Original	25-152	Original
25-62.13	2nd	25-103	Original	25-153	Original
25-62.14	2nd	25-104	Original	25-154	Original
25-62.15	2nd	25-105	Original	25-155	Original
25-62.16	1st	25-106	Original	25-156	Original
25-62.17	Original	25-107	Original	25-157	Original
25-62.18	Original	25-108	Original	25-158	Original
25-62.19	Original	25-109	Original	25-159	Original
25-62.20	Original	25-110	Original	25-160	Original
25-62.21	Original	25-111	Original		
25-62.22	Original*	25-112	Original		
25-63	Original	25-113	Original		
25-64	1st	25-114	Original		
25-65	Original	25-115	Original		
25-66	Original	25-116	Original		
25-67	Original	25-117	Original		
25-68	Original	25-118	Original		
25-69	Original	25-119	Original		
25-70	Original	25-120	Original		
25-71	Original	25-121	Original		
25-72	Original	25-122	Original		
25-73	Original	25-123	Original		
25-74	Original	25-124	Original		
25-75	Original	25-125	Original		
25-76	Original	25-126	Original		
25-77	Original	25-127	Original		
25-78	Original	25-128	Original		
25-79	Original	25-129	Original		
25-80	Original	25-130	Original		
25-81	Original	25-131	Original		
25-82	Original	25-132	Original		
25-83	Original	25-133	Original		
25-84	Original	25-134	Original		
25-85	Original	25-135	Original		
25-86	Original	25-136	Original		
25-87	Original	25-137	Original		
25-88	Original	25-138	Original		
25-89	Original	25-139	Original		

All BellSouth marks contained herein and as set forth in the trademarks and servicemarks section of this Tariff are owned by BellSouth Intellectual Property Corporation.
****

*New or Revised Page

ACCESS SERVICE
CHECK SHEET

PAGE	Number of Revision Except as INDICATED	PAGE	Number of Revision Except as INDICATED	PAGE	Number of Revision Except as INDICATED
25-161	Original	28-15	1st	28-52.1	1st*
25-162	Original	28-16	1st	28-53	2nd*
25-163	Original	28-17	3rd	28-54	1st*
25-164	Original	28-18	2nd	28-55	1st*
25-165	Original	28-19	3rd	28-56	2nd*
25-166	Original	28-20	5th	28-57	1st*
25-167	Original	28-21	1st	28-58	3rd*
25-168	Original	28-22	3rd	29-1	Original
25-169	Original	28-22.1	Original	29-2	Original
25-170	Original	28-23	2nd*	29-3	Original
25-171	Original	28-23.1	Original*	29-4	Original
25-172	Original	28-23.2	Original*	29-5	Original
25-173	Original	28-24	4th*	29-6	Original
25-174	Original	28-25	1st*	29-7	Original
25-175	Original	28-26	5th*		
25-176	Original	28-27	1st*		
25-177	2nd	28-28	2nd*		
25-178	Original	28-29	3rd*		
25-179	Original	28-30	2nd*		
25-180	Original	28-31	4th*		
26-1	Original	28-32	4th*		
26-2	Original	28-33	3rd*		
26-3	Original	28-34	4th*		
26-4	Original	28-35	4th*		
26-5	Original	28-36	2nd*		
26-6	Original	28-36.1	1st		
26-7	Original	28-37	4th*		
26-8	Original	28-38	1st*		
26-9	Original	28-39	Original		
26-10	Original	28-39.1	Original		
26-11	Original	28-39.2	Original		
26-12	Original	28-39.3	Original		
26-13	Original	28-40	11th*		
27-1	Original	28-41	3rd*		
28-1	2nd	28-42	3rd*		
28-2	1st	28-43	4th		
28-3	Original	28-43.1	1st		
28-4	Original	28-44	Original		
28-5	Original	28-45	Original		
28-6	1st*	28-46	Original		
28-7	Original	28-47	1st		
28-8	1st	28-48	1st*		
28-9	Original	28-48.1	Original*		
28-10	4th	28-48.2	Original*		
28-11	Original	28-49	1st*		
28-12	Original	28-50	2nd*		
28-13	2nd	28-51	2nd*		
28-14	1st	28-52	2nd*		

All BellSouth marks contained herein and as set forth in the trademarks and servicemarks section of this Tariff are owned by BellSouth Intellectual Property Corporation.

****

*New or Revised Page

ACCESS SERVICE
CHECK SHEET

Page	Number of Revision Except as Indicated	Page	Number of Revision Except as Indicated	Page	Number of Revision Except as Indicated
A-1	Original*	A-37	Original*		
A-2	Original*	A-38	Original*		
A-3	Original*	A-39	Original*		
A-4	Original*	A-40	Original*		
A-5	Original*	A-41	Original*		
A-6	Original*	A-42	Original*		
A-7	Original*	A-43	Original*		
A-8	Original*	A-44	Original*		
A-9	Original*	A-45	Original*		
A-10	Original*	A-46	Original*		
A-11	Original*	A-47	Original*		
A-12	Original*	A-48	Original*		
A-13	Original*	A-49	Original*		
A-14	Original*	A-50	Original*		
A-15	Original*	A-51	Original*		
A-16	Original*	A-52	Original*		
A-17	Original*	A-53	Original*		
A-18	Original*	A-54	Original*		
A-19	Original*	A-55	Original*		
A-20	Original*	A-56	Original*		
A-21	Original*	A-57	Original*		
A-22	Original*				
A-23	Original*				
A-24	Original*				
A-25	Original*				
A-26	Original*				
A-27	Original*				
A-28	Original*				
A-29	Original*				
A-30	Original*				
A-31	Original*				
A-32	Original*				
A-33	Original*				
A-34	Original*				
A-35	Original*				
A-36	Original*				

*New or Revised Page

****

ACCESS SERVICE

TABLE OF CONTENTS

	Page No.	
Check Sheet	1	
Access Service Tariff Subject Index	28	
Issuing Carriers	69	
Concurring Carriers	69	
Connecting Carriers	69	
Other Participating Carriers	69	
Trademarks and Servicemarks	69	(T)
Explanation of Symbols	70	
Explanation of Abbreviations	70	(T)
Reference to Other Tariffs	72.1	(T)
Reference to Other Publications	72.1	(T)
1. APPLICATION OF TARIFF	1-1	
2. GENERAL REGULATIONS	2-1	
2.1 Undertaking of the Telephone Company	2-1	
2.1.1 Scope	2-1	
2.1.2 Limitations	2-1	
2.1.3 Liability	2-2	
2.1.4 Provision of Services	2-4	
2.1.5 Installation and Termination of Services	2-5	
2.1.6 Maintenance of Services	2-5	
2.1.7 Changes and Substitutions	2-5	
2.1.8 Refusal and Discontinuance of Service	2-6	
2.1.9 Limitation of Use of Metallic Facilities	2-8	(T)
2.1.10 Notification of Service-Affecting Activities	2-8	(T)
2.1.11 Coordination with Respect to Network Contingencies	2-8	
2.1.12 Provision and Ownership of Telephone Numbers	2-8.1	(T)
2.1.13 Metropolitan Statistical Area Access Services	2-8.1	

All BellSouth marks contained herein and as set forth in the trademarks and servicemarks section of this Tariff are owned by BellSouth Intellectual Property Corporation.
****

ACCESS SERVICE

TABLE OF CONTENTS (Cont'd)

	Page No.	
2. GENERAL REGULATIONS (Cont'd)		
2.2 Use	2-8.1	
2.2.1 Interference or Impairment	2-8.1	
2.2.2 Unlawful Use	2-9	
2.2.3 Commingling	2-9	(N)
2.3 Obligation of the Customer	2-9.1	(T)
2.3.1 Damages	2-9.1	(T)
2.3.2 Ownership of Facilities and Theft	2-10	
2.3.3 Equipment Space and Power	2-10	
2.3.4 Availability for Testing	2-10	
2.3.5 Balance	2-10	
2.3.6 Design of Customer Services	2-10	
2.3.7 References to the Telephone Company	2-11	
2.3.8 Claims and Demands for Damages	2-11	
2.3.9 Coordination with Respect to Network Contingencies	2-12	
2.3.10 Jurisdictional Report Requirements	2-12	
2.3.11 Determination of Interstate Charges for Mixed Interstate and Intrastate BellSouth SWA Service and for PPSN Packet Usage	2-18.4	
2.3.12 Determination of Jurisdiction of Mixed Interstate and Intrastate Special Access (a.k.a. BellSouth SPA) Service	2-19	
2.3.13 Sectionalization - Trouble Reporting	2-20	
2.3.14 Toll Free Dialing Number Reporting	2-20	(T)
2.3.15 Utilization of Alternative Access Providers	2-20	(N)
2.4 Payment Arrangements and Credit Allowances	2-21	
2.4.1 Payment of Rates, Charges and Deposits	2-21	
2.4.2 Minimum Periods	2-28.3	
2.4.3 Cancellation of an Order for Service	2-29	
2.4.4 Credit Allowance for Service Interruptions	2-29	
2.4.5 Reestablishment of Service Following Fire, Flood or Other Occurrence	2-35	
2.4.6 Title or Ownership Rights	2-36	
2.4.7 Billing of Access Service Provided by Multiple Companies	2-36	
2.4.8 Optional Payment Plans	2-44.2	
2.4.9 Service Installation Guarantee	2-49.0.19	(T)
2.5 Connections	2-49.2	

All BellSouth marks contained herein and as set forth in the trademarks and servicemarks section of this Tariff are owned by BellSouth Intellectual Property Corporation.
****

ACCESS SERVICE

TABLE OF CONTENTS (Cont'd)

	Page No.	
2. GENERAL REGULATIONS (Cont'd)		
2.6 Definitions	2-49.2	(T)
Access Code	2-49.2	
		(D)
		(D)
		(D)
		(D)
		(D)
Additional Residential Local Exchange Service ("Additional Residential Line")	2-50	(N)
Alternate Central Office	2-50	
Answer/Disconnect Supervision	2-50	(T)
ATM	2-50	(N)
ATM Cell	2-50	(N)
ATM Cell-Based Switching	2-50	(N)
Attenuation Distortion	2-51	
B8ZS	2-51	
Balance (100 Type) Test Line	2-51	(T)
Basic Service Element	2-51	
BellSouth ADSL Service	2-51	
BellSouth Direct Access to Directory Assistance	2-51	
BellSouth Direct Access to Directory Assistance Location	2-51	
BellSouth Directory Assistance (Interstate)	2-52	
BellSouth Directory Assistance Location	2-52	
BellSouth Directory Assistance Location (Interstate)	2-52	
BellSouth Electronic White Pages Location	2-52	
BellSouth Electronic White Pages System	2-52	
BellSouth Inward Operator Services	2-52	
BellSouth Inward Operator Services Location	2-52	
BellSouth Line Information Data Base Access Location	2-52	
BellSouth Line Information Data Base Access Service	2-52.1	
BellSouth Local Number Portability Database Services	2-52.1	
BellSouth SWA Basic Serving Arrangement	2-52.1	
BellSouth SWA Common Transport	2-52.1	
BellSouth SWA Dedicated Transport	2-52.1	
BellSouth SWA FGD and BellSouth SWA TSBSA 3 Signaling	2-52.1	
BellSouth SWA Local Channel	2-52.2	
BellSouth SWA WATS Serving Office	2-52.2	
BellSouth Telecommunications Relay Service Transport	2-52.2	
BellSouth Telecommunications Relay Service Transport Center	2-52.2	
Billing Period	2-52.2	
Bit	2-52.2	
Business Day	2-52.2	

All BellSouth marks contained herein and as set forth in the trademarks and servicemarks section of this Tariff are owned by BellSouth Intellectual Property Corporation.
****

ACCESS SERVICE

TABLE OF CONTENTS (Cont'd)

Page No.

2. GENERAL REGULATIONS (Cont'd)

2.6 Definitions (Cont'd)

Cable Space 2-52.3
Call 2-52.3
Carrier Identification Code (CIC) 2-52.3
Carrier or Common Carrier 2-53
CCS 2-53
CCS7 Signaling Connection 2-53
CCS7 Signaling Termination 2-53
CCS7 Access Arrangement Usage 2-53 (N)
Central Office 2-53
Central Office Prefix 2-53
Centralized Automatic Reporting on Trunks Testing 2-53
Centrex Type Services 2-53.1
Channel(s) 2-53.1
Channel Service Unit 2-53.1
Channelization Equipment 2-53.1
Channelize 2-54
Clear Channel Capability (CCC) 2-54
C-Message Noise 2-54
C-Notched Noise 2-54

Collocator - BellSouth Virtual Expanded Interconnection Service 2-54.1
Collocator's Facilities - BellSouth Virtual Expanded Interconnection Service 2-54.1
Common Line 2-54.1
Commingling 2-54.1 (N)
Communications System 2-55
Conduit Space 2-55

All BellSouth marks contained herein and as set forth in the Trademarks and Servicemarks section of this Tariff are owned by BellSouth Intellectual Property Corporation.
****

ACCESS SERVICE

TABLE OF CONTENTS (Cont'd)

Page No.

2. GENERAL REGULATIONS (Cont'd)

2.6 Definitions (Cont'd)

Customer(s) 2-55
Customer Location 2-55.1

Data Transmission (107 Type) Test Line 2-55.1
Decibel 2-55.1
Decibel Reference Noise C-Message Weighting 2-55.1
Decibel Reference Noise C-Message Reference to 0 2-55.1
Derived Data Channel 2-55.1
Detail Billing 2-56
Directory Number 2-56
Dual Tone Multifrequency Address Signaling 2-56
DS0 2-57
DS1 2-57

Echo Control 2-57
Echo Path Loss 2-57
Echo Return Loss 2-57
Effective 2-Wire 2-57
Effective 4-Wire 2-58
Egress Circuits 2-58
Emergency Interruption Service 2-58
End Office Switch 2-58
End User 2-59
Entry Point 2-59
Entry Switch 2-59
Envelope Delay Distortion 2-59
Equal Level Echo Path Loss 2-59
Exchange 2-59
Exchange Access Connectionless Data Service (XACDS)
(a.k.a. BellSouth Exchange Access Connectionless
Data Service) 2-59.1
Exchange Access Frame Relay Service (XAFRS)
(a.k.a. BellSouth Exchange Access Frame Relay Service) 2-59.1
Expected Measured Loss 2-59.1

Fast Packet Access Services 2-59.1
Facility Signaling Point of Interconnection (FSPOI) 2-59.1 (N)
Field Identifier 2-60
First-Come, First-Served 2-60
First Point of Switching 2-60
Floor Space - BellSouth Virtual Expanded
Interconnection Service 2-60
Frequency Shift 2-60
Grandfathered 2-60
Host Office 2-60
Hub 2-61

All BellSouth marks contained herein and as set forth in the trademarks and servicemarks section of this Tariff are owned by BellSouth Intellectual Property Corporation.
****

ACCESS SERVICE

TABLE OF CONTENTS (Cont'd)

Page No.

2. GENERAL REGULATIONS (Cont'd)

2.6 Definitions (Cont'd)

Immediately Available Funds	2-61	
Impedance Balance	2-61	
Impulse Noise	2-61	
Individual Case Basis	2-61	
Ingress Circuits	2-61	
Inserted Connection Loss	2-61	
Interconnection	2-62	
Interexchange Carrier (IC) or Interexchange Common Carrier	2-62	
Intermodulation Distortion	2-62	
Interstate Communications	2-62	
Intrastate Communications	2-62	
Line Controlled Pay Stations	2-62.1	(N)
Line-Side Connection	2-63	
Local Access and Transport Area	2-63	
Local Calling Area	2-63	
Location Routing Number	2-63	(T)
Local Tandem Switch	2-63	
Location Provider	2-63	
Loop Around Test Line	2-63	
Loss Deviation	2-64	
Major Fraction Thereof	2-64	
Manhole	2-64	
Maritime Radio Common Carriers (MRCCs)	2-64	
Message	2-64	
Milliwatt (102 Type) Test Line	2-64	
Minutes of Use (See Access Minutes)	2-64	
Mobile Telephone Switching Office (MTSO)	2-64	
Multipoint Channel	2-65	
N-1 Carrier	2-65	
Network Channel Interface (NCI) Code Update	2-65	
Network Control Signaling	2-65	
Nonsynchronous Test Line	2-65	
North American Numbering Plan	2-65	

All BellSouth marks contained herein and as set forth in the trademarks and servicemarks section of this Tariff are owned by BellSouth Intellectual Property Corporation.
****

ACCESS SERVICE

TABLE OF CONTENTS (Cont'd)

Page No.

2. GENERAL REGULATIONS (Cont'd)

2.6 Definitions (Cont'd)

Off-hook 2-65
On-hook 2-66
Open Circuit Test Line 2-66
Operator Services System 2-66
Operator Services System Location 2-66
Operator Services System Serving Area 2-66
Originating Direction 2-66
Overlap Outpulsing 2-66

Pay Telephone Line 2-67
Payphone Service Provider 2-67
Phase Jitter 2-67
Point of Termination 2-67
Ported Number 2-67
Premises 2-67
Primary Residential Local Exchange Service ("Primary Residential Line") 2-67.1 (N)

Query 2-67.1 (T)

Radio Common Carriers (RCCs) 2-67.1 (T)
Registered Equipment 2-68
Remote Access Server 2-68
Remote Switching Modules and/or Remote Switching Systems 2-68
Return Loss 2-68

Secondary Channel 2-68
Service Control Point (SCP) 2-68
Service Installation Guarantee 2-68
Service Provided Upon Request 2-68.
Service Switching Point (SSP) 2-68.1 (N)
Serving Wire Center 2-69

All BellSouth marks contained herein and as set forth in the trademarks and servicemarks section of this Tariff are owned by BellSouth Intellectual Property Corporation.
****

ACCESS SERVICE

TABLE OF CONTENTS (Cont'd)

	Page No.	
2. GENERAL REGULATIONS (Cont'd)		
2.6 Definitions (Cont'd)		
Seven Digital Manual Test Line	2-69	
Shared Network Arrangement	2-69	
Short Circuit Test Line	2-69	
Signal-To-C-Notched Noise Ratio	2-69	
Signal Transfer Point	2-69	
Signaling Point Code	2-69	(N)
Signaling Point of Interconnection (SPOI)	2-69	(T)
Singing Return Loss	2-70	
Space Construction Charge	2-70	
Space Preparation Charge	2-70	
Special Order	2-70	
Subtending End Office of an Access Tandem	2-70	
Synchronous Test Line	2-70.1	
Telephone Company Answering Service Concentrator	2-70.1	
Terminating Direction	2-70.1	
Toll Free Dialing Database	2-71	
Traditional Signaling	2-71	
Traffic	2-71	
Traffic Operator Position System (TOPS) Tandem	2-71	
Transactions Capabilities Application Part (TCAP) Messages	2-71	
Transmission Measuring (105 Type) Test Line/Responder	2-72	
Transmission Path	2-72	
Trunk	2-72	
Trunk Group	2-72	
Trunk-Side Connection	2-72	
Two-Wire to Four-Wire Conversion	2-72	
Unbundled Network Elements (UNEs)	2-72	(N)
Uniform Service Order Code (USOC)	2-73	
Unusable Service	2-73	
V&H Coordinates Method	2-73	
Verification Service	2-73	(N)
Wire Center	2-73	
3. CARRIER COMMON LINE ACCESS SERVICE	3-1	
3.1 General Description	3-1	
3.2 Limitations	3-1	
3.2.1 Exclusions	3-1	
3.2.2 BellSouth SWA WATS Service Access Lines	3-1	(T) (D)

All BellSouth marks contained herein and as set forth in the trademarks and servicemarks section of this Tariff are owned by BellSouth Intellectual Property Corporation.
****

ACCESS SERVICE

TABLE OF CONTENTS (Cont'd)

	Page No.
3. CARRIER COMMON LINE ACCESS SERVICE (Cont'd)	
3.3 Undertaking of the Telephone Company	3-2
3.3.1 Provision of Service	3-2
3.3.2 Interstate and Intrastate Use	3-2
3.4 Obligations of the Customer	3-2
3.4.1 BellSouth SWA Service Requirement	3-2
3.4.2 Supervision	3-3
3.5 Determination of Usage Subject to Carrier Common Line Access Service Charges	3-3
3.5.1 Determination of Jurisdiction	3-3
3.5.2 Cases Involving Usage Recording by the Customer	3-3
3.5.3 Local Exchange Access and Enhanced Services Exemption	3-3
3.6 Resold Services	3-4
3.6.1 Scope	3-4
3.6.2 Customer Obligations Concerning the Resale of MTS and MTS-type Services	3-4
3.6.3 Resale Documentation Provided by the Customer	3-5
3.6.4 Rate Regulations Concerning the Resale of MTS and MTS-type Services	3-5
3.7 Reserved for Future Use	(N)
3.8 Rate Regulations	3-14
3.8.1 Billing of Charges	3-14
3.8.2 Measuring and Recording of Call Detail	3-14
3.8.3 Unmeasured BellSouth SWA FGA and BellSouth SWA FGB Usage	3-15
3.8.4 Percent Interstate Use (PIU)	3-15
3.8.5 Determination of Premium and Non-Premium Charges	3-15

All BellSouth marks contained herein and as set forth in the trademarks and servicemarks section of this Tariff are owned by BellSouth Intellectual Property Corporation.
****

ACCESS SERVICE

TABLE OF CONTENTS (Cont'd)

	Page No.	
3. CARRIER COMMON LINE ACCESS SERVICE (Cont'd)		
3.9 Rates and Charges	3-18	
3.9.1 Carrier Common Line Charges	3-18	
4. END USER ACCESS SERVICE	4-1	
4.1 General Description	4-1	
4.2 Limitations	4-1	
4.3 Undertaking of the Telephone Company	4-1	
4.4 Obligations of the End User	4-1	
4.5 Payment Arrangements and Credit Allowances	4-2	
4.6 Rate Regulations	4-2	
4.7 Rates and Charges	4-6	
5. ORDERING OPTIONS FOR BELLSOUTH SWA AND SPECIAL ACCESS (A.K.A. BELLSOUTH SPA SERVICE)	5-1	
5.1 General	5-1	
5.1.1 Ordering Conditions	5-1	
5.1.2 Provision of Other Services	5-2.1	
5.1.3 Special Construction	5-3	
5.2 Access Order	5-3	
5.2.1 General	5-3	
5.2.2 Information Required	5-3	
5.2.3 Traffic Engineering Responsibilities	5-6	
5.2.4 BellSouth SWA 8XX Toll Free Dialing Ten Digit Screening Service	5-7	
5.2.5 Switched Access Service to a Remote Switching Office	5-8	
5.2.6 BellSouth Directory Assistance Access Service	5-8.1	
5.2.7 Special Access (a.k.a. BellSouth SPA) Service and BellSouth SWA Transport Service	5-9	
5.2.8 BellSouth SWA Service to Cellular Interconnections	5-10	
5.2.9 BellSouth SWA 900 Service	5-10	
5.2.10 BellSouth Operator Transfer Service	5-10	
5.2.11 BellSouth Electronic White Pages Access Service	5-11	
5.2.12 BellSouth Line Information Data Base (LIDB) Access Service	5-11	
5.2.13 BellSouth Expanded Interconnection Service (EIS)	5-11	
5.2.14 BellSouth Billing Name and Address for ANI	5-11	
5.2.15 BellSouth Inward Operator Services	5-11	(N)
5.2.16 Mechanized Interface to Specified Operation Support Systems	5-11.0.1	(T)
5.2.17 BellSouth SWA 500 Service	5-11.1	(T)
5.2.18 BellSouth Local Number Portability Database Services	5-11.1	(T)
5.2.19 BellSouth Remote Access Service	5-11.1	(T)
5.2.20 BellSouth IPTG Terminating Service	5-11.1	(T)

All BellSouth marks contained herein and as set forth in the trademarks and servicemarks section of this Tariff are owned by BellSouth Intellectual Property Corporation.

****

ACCESS SERVICE

TABLE OF CONTENTS (Cont'd)

	Page No.
5. ORDERING OPTIONS FOR BELLSOUTH SWA AND SPECIAL ACCESS (A.K.A. BELLSOUTH SPA) SERVICE (Cont'd)	
5.3 Access Order Modifications	5-11.1.1
5.4 Cancellation of an Access Order	5-15
5.5 Selection of Facilities for Access Order	5-20.1
5.6 Minimum Period	5-21
5.6.1 Minimum Period Charges	5-22
5.7 Shared Use Facilities	5-23
5.8 Available Inventory	5-23.2
6. BELLSOUTH SWA SERVICE	6-1
6.1 General	6-1
6.1.1 BellSouth SWA Service Arrangements and Manner of Provision	6-1
6.1.2 WATS Access Line (a.k.a. BellSouth SPA WATS Line) Service	6-8
6.1.3 Rate Categories	6-8
6.1.4 Special Facilities Routing	6-28
6.1.5 Design Layout Report	6-28.1
6.1.6 Acceptance Testing	6-28.1 (T)
6.1.7 Ordering Options and Conditions	6-28.1
6.1.8 BellSouth SWA CCSAC Testing Requirements	6-29
6.1.9 BellSouth Cross Connect Service	6-29
6.2 Provision and Description of BellSouth SWA Service Arrangements	6-29
6.2.1 BellSouth SWA FGA	6-30
6.2.2 BellSouth SWA FGB	6-35
6.2.3 BellSouth SWA FGC	6-39
6.2.4 BellSouth SWA FGD	6-44
6.2.5 BellSouth SWA 8XX Toll Free Dialing Ten Digit Screening Service	6-51
6.2.6 BellSouth SWA 900 Service	6-53.1
6.2.7 BellSouth SWA LSBSA	6-57
6.2.8 BellSouth SWA TSBSA	6-62
6.2.9 BellSouth SWA 500 Service	6-75.5
6.2.10 BellSouth Dedicated Ring	6-75.8
6.2.11 BellSouth Local Number Portability Database Services	6-75.13
6.2.12 BellSouth Managed Shared Ring Service	6-75.15
6.2.13 BellSouth SWA Managed Shared Network Service	6-75.21
6.2.14 BellSouth IPTG Terminating Service	6-75.23

All BellSouth marks contained herein and as set forth in the trademarks and servicemarks section of this Tariff are owned by BellSouth Intellectual Property Corporation.
****

ACCESS SERVICE

TABLE OF CONTENTS (Cont'd)

	Page No.	
6. BELLSOUTH SWA SERVICE (Cont'd)		
6.3 Local Switching Optional Features	6-76	
6.3.1 Common Switching (BellSouth SWA FG Customers Only)	6-76	
6.3.2 Common Switching (BellSouth SWA FG and BellSouth SWA Basic Serving Arrangement Customers)	6-80	(T)
6.3.3 Basic Service Elements (a.k.a. BellSouth SWA Basic Serving Arrangement Customers Only)	6-87.0.1	(T)
6.3.4 Common Switching Optional Features for Use with WATS Access Lines (a.k.a. BellSouth SPA WATS Line) (BellSouth SWA FG and BellSouth SWA Basic Serving Agreement Customers)	6-94.1	(T)
6.3.5 Basic Service Elements for Use with WATS Access Lines (a.k.a. BellSouth SPA WATS Line) (BellSouth SWA Basic Serving Agreement Customers Only)	6-99	
6.3.6 Transport Termination	6-101	
6.3.7 WATS Access Lines (a.k.a. BellSouth SPA WATS line) Termination	6-107	

All BellSouth marks contained herein and as set forth in the trademarks and servicemarks section of this Tariff are owned by BellSouth Intellectual Property Corporation.
****

ACCESS SERVICE

TABLE OF CONTENTS (Cont'd)

	Page No.	
6. BELLSOUTH SWA SERVICE (Cont'd)		
6.4 Transmission Specifications	6-108	
6.4.1 Transmission Specifications	6-109	(T)
6.4.2 Data Transmission Parameters	6-115	
6.5 Obligations of the Telephone Company	6-118	
6.5.1 Network Management	6-118	
6.5.2 Design and Traffic Routing of BellSouth SWA Service	6-118	
6.5.3 Provision of Service Performance Data	6-119	
6.5.4 Trunk Group Measurement Reports	6-119	
6.5.5 Determination of Number of Transmission Paths	6-119	
6.5.6 Determination of Number of End Office Transport Terminations	6-120	
6.5.7 Design Blocking Probability	6-120	
6.6 Obligations of the Customer	6-123	
6.6.1 Report Requirements	6-123	
6.6.2 Supervisory Signaling	6-124	
6.6.3 Trunk Group Measurement Reports	6-124	
6.6.4 Design of BellSouth SWA Services	6-125	
6.6.5 Billing Data for Termination Usage	6-125	(N)
6.7 Rate Regulations	6-125	
6.7.1 Description and Application of Rates and Charges	6-125	
6.7.2 Minimum Periods	6-138	
6.7.3 Reserved For Future Use	6-138	(T)
6.7.4 Minimum Monthly Charge	6-138	
6.7.5 Reserved For Future Use	6-138	(T)
6.7.6 Change of Service Category Type	6-138	
6.7.7 Moves	6-141	
6.7.8 Measuring Access Minutes	6-142	
6.7.9 Network Blocking Charge for BellSouth SWA FGD and BellSouth SWA TSBSA 3	6-148	
6.7.10 Application of Rates for Extension Service	6-149	
6.7.11 Message Unit Credit	6-150	

All BellSouth marks contained herein and as set forth in the trademarks and servicemarks section of this Tariff are owned by BellSouth Intellectual Property Corporation.
****

ACCESS SERVICE

TABLE OF CONTENTS (Cont'd)

	Page No.	
6. BELLSOUTH SWA SERVICE (Cont'd)		
6.7 Rate Regulations (Cont'd)		
6.7.12 Local Information Delivery Services	6-151	
6.7.13 Mileage Measurement	6-151	
6.7.14 Shared Use	6-154	
6.7.15 Information Surcharge	6-154.1	(T)
6.7.16 Shared Network Arrangement	6-154.1	(T)
6.7.17 Facility Hubs	6-155	(T)
6.7.18 Reserved For Future Use	6-155	(T)
6.7.19 Zone Pricing-BellSouth SWA Transport	6-155	(T)
6.7.20 BellSouth Dedicated Ring	6-155.1	
6.7.21 BellSouth Managed Shared Ring Service	6-157.1.0.1	
6.7.22 BellSouth Remote Access Service	6-157.1.0.3	
6.8 Rates and Charges	6-157.1.1	(T)
6.8.1 BellSouth SWA Transport	6-157.1.1	(T)
6.8.2 Local Switching	6-161	
6.8.3 Equal Access Cost Recovery Rate	6-176	
6.8.4 Information Surcharge	6-176	
6.8.5 Inside Moves	6-176	
6.8.6 Changes of Network Channel Interface Codes	6-176	
6.8.7 Shared Network Arrangement	6-177	
6.8.8 Service Rearrangements	6-177	
6.8.9 Transfer of Service	6-178	
6.8.10 BellSouth SWA 500 Service	6-178	
6.8.11 BellSouth SWA 8XX Toll Free Dialing Ten Digit Screening Service	6-178.1	
6.8.12 BellSouth Local Number Portability Database Services	6-178.2	
6.8.13 BellSouth IPTG Terminating Service	6-178.2	
7. SPECIAL ACCESS (A.K.A. BELLSOUTH SPA) SERVICE	7-1	
7.1 General	7-1	
7.1.1 Channel Types	7-1	
7.1.2 Rate Categories	7-4	
7.1.3 Service Configurations	7-8.2	(T)
7.1.4 Alternate Use	7-15	
7.1.5 Special Facilities Routing	7-15	
7.1.6 Design Layout Report	7-15	
7.1.7 Acceptance Testing	7-15	
7.1.8 Ordering Options and Conditions	7-16	
7.2 Service Descriptions	7-17	
7.2.1 Metallic Service (a.k.a. BellSouth SPA Metallic)	7-19	
7.2.2 Telegraph Grade Services (a.k.a. BellSouth SPA Telegraph)	7-20	
7.2.3 Voice Grade Service (a.k.a. BellSouth SPA DSO VG)	7-21	
7.2.3.1 WATS Access Line (WAL) (a.k.a. BellSouth SPA WATS Line) Service	7-32	

All BellSouth marks contained herein and as set forth in the trademarks and servicemarks section of this Tariff are owned by BellSouth Intellectual Property Corporation.
****

ACCESS SERVICE

TABLE OF CONTENTS (Cont'd)

		Page No.	
7. SPECIAL ACCESS (A.K.A. BELLSOUTH SPA) SERVICE (Cont'd)			
7.2 Service Descriptions (Cont'd)			
7.2.4	Program Audio Service (a.k.a. BellSouth SPA Program Audio)	7-34	
7.2.5	Video Services (a.k.a. BellSouth SPA Video)	7-36.1	
7.2.6	Wideband Analog Service (a.k.a. BellSouth SPA Wideband Analog)	7-39	
7.2.7	Wideband Data Service (a.k.a. BellSouth SPA Wideband Data)	7-41	
7.2.8	Digital Data Access Service (a.k.a. BellSouth SPA DS0 Digital Data)	7-43	
7.2.9	High Capacity Service (a.k.a. BellSouth SPA High Capacity)	7-49	
7.2.10	Dry Fiber	7-55.1	(T)
7.2.11	Self-healing Rings (a.k.a. BellSouth SPA Dedicated Ring)	7-56	
7.2.12	Derived Data Channel Service (DDCS)(a.k.a. BellSouth SPA Derived Data Channel)	7-58	
7.2.13	SMARTPath service (a.k.a. BellSouth SPA DS1 Shared Ring)	7-58.2	
7.2.14	SMARTPath DS3 Transport Service (a.k.a. BellSouth SPA DS3 Shared Ring)	7-58.3	
7.2.15	SMARTGate service (a.k.a. BellSouth SPA Managed Shared Ring Network)	7-58.6	
7.2.16	BellSouth SPA Managed Shared Network Service	7-58.10	
7.2.17	Reserved For Future Use	7-58.12	
7.2.18	BellSouth Native Mode LAN Interconnection Service	7-58.20	(N)
7.3 Channel Interface and Network Channel Codes		7-59	
7.3.1	Glossary of Channel Interface Codes and Options	7-59	
7.3.2	Impedance	7-66	
7.3.3	Digital Hierarchy Channel Interface Codes (4DSX++)	7-66	
7.3.4	Service Designator/Network Channel Code Conversion Table	7-67	
7.3.5	Compatible Channel Interfaces	7-68.1	(T)
7.4 Rate Regulations		7-69	
7.4.1	Types of Rates and Charges	7-69	
7.4.2	Surcharge for Special Access (a.k.a. BellSouth SPA) Service	7-75	
7.4.3	Message Station Equipment Recovery Charge	7-78	
7.4.4	Minimum Periods	7-79	
7.4.5	Moves	7-79.1	(T)
7.4.6	Mileage Measurement	7-80.1	
7.4.7	Facility Hubs	7-82	

All BellSouth marks contained herein and as set forth in the trademarks and servicemarks section of this Tariff are owned by BellSouth Intellectual Property Corporation.
****

ACCESS SERVICE

TABLE OF CONTENTS (Cont'd)

		Page No.	
7.4 Rate Regulations (Cont'd)		7-69	
7.4.8	Shared Use Analog and Digital High Capacity (a.k.a. BellSouth SPA High Capacity) Services	7-83	
7.4.9	LightGate Service (a.k.a. BellSouth SPA Point to Point Network)	7-86.1	
7.4.10	Reserved For Future Use	7-87	
7.4.11	Shared Network Arrangement	7-87	
7.4.12	FlexServ Service (a.k.a. BellSouth SPA Customer Reconfiguration)	7-88	
7.4.13	Voice Grade (a.k.a. BellSouth DSO VG) Rate Stability Plan	7-94	
7.4.14	Self-Healing Rings (a.k.a. BellSouth SPA Dedicated Ring)	7-100	
7.4.15	Digital Data Access Service (a.k.a. BellSouth SPA DSO Digital Data)	7-103.1.1	(T)
7.4.16	DS1 High Capacity Service (a.k.a. BellSouth SPA DS1)	7-103.1.1	
7.4.17	Commercial Quality Video Service (a.k.a. BellSouth SPA Commercial Quality Video)	7-103.2	
7.4.18	Derived Data Channel Service (DDCS) (a.k.a. BellSouth SPA Derived Data Channel)	7-103.4	(T)

All BellSouth marks contained herein and as set forth in the trademarks and servicemarks section of this Tariff are owned by BellSouth Intellectual Property Corporation.
****

ACCESS SERVICE

TABLE OF CONTENTS (Cont'd)

Page No.

7. SPECIAL ACCESS (A.K.A. BELLSOUTH SPA) SERVICE (Cont'd)

7.4 Rate Regulations (Cont'd)

7.4.19	SMARTPath Service (a.k.a. BellSouth SPA Shared Ring)	7-103.5	
7.4.20	Network Optimization Waiver	7-103.7	(T)
7.4.21	Voice Grade Service (a.k.a. BellSouth SPA DSO VG)	7-103.8.1	
7.4.22	SMARTGate Service (a.k.a. BellSouth SPA Managed Shared Ring Network)	7-103.10	
7.4.23	Uncompressed Digital Video Service (a.k.a. BellSouth SPA Uncompressed Digital Video)	7-103.13	
7.4.24	70 MHz Transport Service (a.k.a. BellSouth SPA 70 MHz Transport)	7-103.14	
7.4.25	DS3 Digital Video Service (a.k.a. BellSouth SPA DS3 Digital Video)	7-103.15	
7.4.26	Zone Pricing- Special Access (ak.a. BellSouth SPA) Service	7-103.17	
7.4.27	BellSouth SPA Managed Shared Network Service	7-103.18	
7.4.28	BellSouth SPA Modular Video Transport Service	7-103.22	
7.4.29	Reserved For Future Use	7-103.23	
7.4.30	BellSouth DS1 Diverse Service	7-103.25	
7.4.31	Broadcast Quality Video (a.k.a. BellSouth SPA Quality Video) Service	7-103.26	(N)
7.4.32	BellSouth Native Mode LAN Interconnection Service	7-103.27	(N)

7.5 Rates and Charges 7-104

7.5.1	Metallic Services (a.k.a. BellSouth SPA Metallic)	7-104
7.5.2	Telegraph Grade Service (a.k.a. BellSouth SPA Telegraph)	7-106
7.5.3	Voice Grade Services (a.k.a. BellSouth SPA DSO VG)	7-108
7.5.3.1	WATS Access Line Service (a.k.a. BellSouth SPA WATS Line)	7-119
7.5.4	Program Audio Service (a.k.a. BellSouth SPA Program Audio)	7-121
7.5.4.1	Monthly Rates and Charges	7-121
7.5.4.2	Daily Rates and Charges	7-124
7.5.5	Video Services (a.k.a. BellSouth SPA Video)	7-127
7.5.5.1	Broadcast Quality Video Service (a.k.a. BellSouth SPA Broadcast Quality Video)	7-127
7.5.5.2	Commercial Quality Video Service (a.k.a. BellSouth SPA Commercial Quality Video)	7-129.1
7.5.5.3	Uncompressed Switched Video Service (a.k.a. BellSouth SPA Uncompressed Digital Video Network)	7-129.3
7.5.5.4	70 MHz Transport Service (a.k.a. BellSouth SPA 70 MHz Transport)	7-129.5

All BellSouth marks contained herein and as set forth in the trademarks and servicemarks section of this Tariff are owned by BellSouth Intellectual Property Corporation.
****

ACCESS SERVICE

TABLE OF CONTENTS (Cont'd)

		Page No.	
7.5 Rates and Charges (Cont'd)			
7.5.5.5	DS3 Digital Video (a.k.a. BellSouth DS3 Digital Video) Service	7-129.6	
7.5.5.6	BellSouth SPA Modular Video Transport Service	7-129.7	
7.5.6	Wideband Analog Service (a.k.a. BellSouth SPA Wideband Analog)	7-130	
7.5.7	Wideband Data Service (a.k.a. BellSouth SPA Wideband Data)	7-133	
7.5.8	Digital Data Access Service (a.k.a. BellSouth SPA DS0 Digital Data)	7-135	
7.5.9	High Capacity Service (a.k.a. BellSouth SPA High Capacity)	7-144.1	(T)
7.5.10	Message Station Equipment Recovery Charge	7-151	
7.5.11	Special Access (a.k.a. BellSouth SPA) Surcharge	7-152	
7.5.12	Transfer of Service	7-152	
7.5.13	Dry Fiber	7-152	
7.5.14	Self-Healing Rings (a.k.a. BellSouth SPA Dedicated Ring)	7-152.1	
7.5.15	Derived Data Channel Service (DDCS) (a.k.a. BellSouth SPA Derived Data Channel)	7-156.2.1	(T)
7.5.16	SMARTPath Service (a.k.a. BellSouth SPA Shared Ring)	7.156.3	
7.5.17	Reconfiguration Charges	7.156.4	
7.5.18	FlexServ Service (a.k.a. BellSouth SPA Customer Reconfiguration)	7.156.5	
7.5.19	SMARTGate Service (a.k.a. BellSouth SPA Managed Shared Ring Network)	7.156.13	
7.5.20	BellSouth SPA Managed Shared Network Service	7-156.14	
7.5.21	Reserved For Future Use	7-156.93	
7.5.22	BellSouth Native Mode LAN Interconnection Service	7-156.97	(N)
7.6 Individual Case Basis (ICB) Rates and Charges		7-157	
7.7 Voice Grade Rate Stability Plan		7-172	
7.7.1	Rates and Charges	7-172	
8. RESERVED FOR FUTURE USE		8-1	

All BellSouth marks contained herein and as set forth in the trademarks and servicemarks section of this Tariff are owned by BellSouth Intellectual Property Corporation.
****

ACCESS SERVICE

TABLE OF CONTENTS (Cont'd)

	Page No.	
9. BELLSOUTH DIRECTORY ASSISTANCE	9-1	
9.1 BellSouth Directory Assistance Access Service	9-1	
9.1.1 General Description	9-1	
9.1.2 Undertaking of the Telephone Company	9-1	
9.1.3 Obligations of the Customer	9-7	
9.1.4 Payment Arrangements	9-8	
9.1.5 Rate Regulations	9-11	
9.1.5.1 Rate Categories	9-11.0.2	
9.1.6 Rates and Charges	9-11.1	
9.2 BellSouth Electronic White Pages Access Service	9-12.1	
9.2.1 General Description	9-12.1	
9.2.2 Undertaking of the Telephone Company	9-12.1	
9.2.3 Obligations of the Customer	9-13	
9.2.4 Rate Regulations	9-14	
9.2.5 Rates and Charges	9-14	
9.3 BellSouth Direct Access to Directory Assistance Service	9-15	
9.3.1 General Description	9-15	
9.3.2 Undertaking of the Telephone Company	9-15	
9.3.3 Obligations of the Customer	9-16	
9.3.4 Rate Regulations	9-18	
9.3.5 Rates and Charges	9-19	
9.4 BellSouth Flat Rated DA Trunks	9-19.1	(N)
9.4.1 General Description	9-19.1	(N)
9.4.2 Service Requirements	9-19.1	(N)
9.4.3 Rates and Charges	9-19.1	(N)
9.5 BellSouth Alternate DA Service Capability	9-20	
9.5.1 General Description	9-20	
9.5.2 Rate Regulations	9-20	
9.5.3 Rates and Charges	9-21	
9.6 BellSouth Optional DA Calling Plan 1	9-21	
9.6.1 General Description	9-21	
9.6.2 Obligations of the Customer	9-21	
9.6.3 Obligations of the Telephone Company	9-22	
9.6.4 Rate Regulations and Payment Arrangements	9-22	
9.6.5 Rates and Charges	9-25	

Certain material previously appearing on this page now appears on Original page 23.1.

All BellSouth marks contained herein and as set forth in the trademarks and servicemarks section of this Tariff are owned by BellSouth Intellectual Property Corporation.
****

ACCESS SERVICE

TABLE OF CONTENTS (Cont'd)

	Page No.	
9. BELLSOUTH DIRECTORY ASSISTANCE (Cont'd)	9-1	
9.7 BellSouth Operator Services Automatic Call Distribution (OSACD) Service	9-26	(N)
9.7.1 General Description	9-26	(N)
9.7.2 Undertaking of the Telephone Company	9-26	(N)
9.7.3 Obligations of the Customer	9-26	(N)
9.7.4 Technical References and Requirements	9-27	(N)
9.7.5 Rate Regulations	9-27	(N)
9.7.6 Rates and Charges	9-27	(N)
10. SPECIAL FEDERAL GOVERNMENT ACCESS SERVICES	10-1	(M)
10.1 General	10-1	(M)
10.2 Emergency Conditions	10-1	(M)
10.3 Intervals to Provide Service	10-2	(M)
10.4 Safeguarding of Service	10-2	(M)
10.4.1 Facility Availability	10-2	(M)
10.5 Federal Government Regulations	10-2	(M)

Certain material appearing on this page previously appeared on 7th Revised Page 23.

All BellSouth marks contained herein and as set forth in the trademarks and servicemarks section of this Tariff are owned by BellSouth Intellectual Property Corporation.
****

ACCESS SERVICE

TABLE OF CONTENTS (Cont'd)

		Page No.	
10.6	Service Offerings to the Federal Government	10-3	
10.6.1	Type and Description	10-3	
10.6.2	Mileage Application	10-7.2	(T)
10.6.3	Application of Move Charges	10-7.2	(T)
10.6.4	Rates and Charges	10-7.2	(T)
10.6.5	Individual Case Basis (ICB) Rates and Charges	10-11	
11.	SPECIAL FACILITIES ROUTING OF ACCESS SERVICES	11-1	
11.1	General	11-1	
11.2	Rates and Charges	11-2	
11.2.1	Diversity	11-2	
11.2.2	Avoidance	11-2	
11.2.3	Diversity and Avoidance Combined	11-3	
11.2.4	Cable-Only Facilities	11-3	
11.3	Individual Case Basis ICB Rates and Charges	11-3	
12.	SPECIALIZED SERVICE OR ARRANGEMENTS	12-1	
12.1	General	12-1	
12.2	Application of Move Charges	12-1	
12.3	Rates and Charges	12-2	
12.4	Reserved For Future Use	12-45	(T)
12.5	Video Ring Service	12-59	
13.	ADDITIONAL ENGINEERING, ADDITIONAL LABOR AND MISCELLANEOUS SERVICES	13-1	
13.1	Additional Engineering	13-1	(T)
13.1.1	Charges for Additional Engineering	13-1.1	
13.2	Additional Labor	13-2	
13.2.1	Overtime Installation	13-2	
13.2.2	Overtime Repair	13-2	
13.2.3	Standby	13-2	
13.2.4	Testing and Maintenance with Other Telephone Companies	13-2	
13.2.5	Other Labor	13-3	
13.2.6	Charges for Additional Labor	13-3	

All BellSouth marks contained herein and as set forth in the trademarks and servicemarks section of this Tariff are owned by BellSouth Intellectual Property Corporation.
****

ACCESS SERVICE

TABLE OF CONTENTS (Cont'd)

Page No.

13. ADDITIONAL ENGINEERING, ADDITIONAL LABOR AND MISCELLANEOUS SERVICES (Cont'd)

13.3 Miscellaneous Services 13-5
13.3.1 Maintenance of Service 13-5
13.3.2 Reserved For Future Use 13-6
13.3.3 BellSouth Equal Access Subscription 13-7
13.3.4 Standard Jacks - Registration Program 13-18
13.3.5 Testing Services 13-25
13.3.6 Provision of Access Service Billing Information 13-45
13.3.7 Protective Connecting Arrangements 13-48
13.3.8 Controller Arrangement 13-55
13.3.9 Telecommunications Service Priority 13-55
13.3.10 BellSouth Administrative Management Service 13-61
13.3.11 Equal Access Transaction Services 13-69
13.3.12 Security Card 13-74.1
13.3.13 International Call Blocking 13-74.2
13.3.15 BellSouth Billing Name and Address for ANI 13-75
13.3.16 BellSouth CARE Data Gathering 13-76.2
13.3.17 900-Type Pay per Call Service Blocking 13-76.5
13.3.18 Answer Supervision 13-76.6
13.3.19 Enhanced Originating Line Screening (EOLS) Service 13-76.7
13.3.20 Reserved For Future Use 13-76.7
13.3.21 BellSouth Wireless Local Number Portability End User Line Charge 13-76.11 (T)
13.3.22 Intra-Office Collocation Cross Connect Service 13-76.14
13.3.23 Physical Access Cross Connect Service 13-76.16
13.3.24 Virtual Access Cross Connect Service 13-76.18

13.4 Individual Case Basis (ICB) Rates and Charges 13-77

14. EXCEPTIONS TO ACCESS SERVICE OFFERINGS 14-1

14.1 Interstate Served Direct Foreign Exchange Service 14-1

All BellSouth marks contained herein and as set forth in the trademarks and servicemarks section of this Tariff are owned by BellSouth Intellectual Property Corporation.
****

ACCESS SERVICE

TABLE OF CONTENTS (Cont'd)

		Page No.	
15.	OPERATING TERRITORY OF THE TELEPHONE COMPANY	15-1	
15.1	Alabama	15-1	(M)
15.1.1	Birmingham - LATA	15-1	(M)
15.1.2	Huntsville - LATA	15-1	(M)
15.1.3	Mobile - LATA	15-2	(M)
15.1.4	Montgomery - LATA	15-2	(M)
15.2	Florida	15-2	(M)
15.2.1	Pensacola-LATA	15-2	(M)
15.2.2	Panama City-LATA	15-3	(M)
15.2.3	Jacksonville-LATA	15-3	(M)
15.2.4	Gainesville-LATA	15-3	(M)
15.2.5	Daytona Beach-LATA	15-4	(M)
15.2.6	Orlando-LATA	15-4	(M)
15.2.7	Southeast-LATA	15-4	(M)
15.3	Georgia	15-5	
15.3.1	Atlanta-LATA	15-5	
15.3.2	Albany-LATA	15-6	
15.3.3	Augusta-LATA	15-6	
15.3.4	Macon-LATA	15-6	
15.3.5	Savannah-LATA	15-7	
15.4	Kentucky	15-7	
15.4.1	Louisville-LATA	15-7	
15.4.2	Owensboro-LATA	15-8	
15.4.3	Winchester-LATA	15-9	
15.5	Louisiana	15-10	
15.5.1	Baton Rouge-LATA	15-10	
15.5.2	LaFayette-LATA	15-10	
15.5.3	New Orleans-LATA	15-11	
15.5.4	Shreveport-LATA	15-12	

Certain material previously appearing on this page now appears on 5th Revised Page 27.

Certain material now appearing on this page previously appeared on 9th Revised Page 25.

All BellSouth marks contained herein and as set forth in the trademarks and servicemarks section of this Tariff are owned by BellSouth Intellectual Property Corporation.
****

ACCESS SERVICE

TABLE OF CONTENTS (Cont'd)

	Page No.	
15. OPERATING TERRITORY OF THE TELEPHONE COMPANY (CONT'D)		
15.6 Mississippi	15-13	(M)
15.6.1 Jackson-LATA	15-13	(M)
15.6.2 Biloxi-LATA	15-15	(M)
15.7 North Carolina	15-15	(M)
15.7.1 Asheville-LATA	15-15	(M)
15.7.2 Charlotte-LATA	15-15	(M)
15.7.3 Greensboro-LATA	15-16	(M)
15.7.4 Raleigh-LATA	15-16	(M)
15.7.5 Wilmington-LATA	15-16	(M)
15.8 South Carolina	15-17	(M)
15.8.1 Greenville-LATA	15-17	(M)
15.8.2 Florence-LATA	15-17	(M)
15.8.3 Columbia-LATA	15-17	(M)
15.8.4 Charleston-LATA	15-18	(M)
15.9 Tennessee	15-18	
15.9.1 Chattanooga-LATA	15-18	
15.9.2 Knoxville-LATA	15-18	
15.9.3 Memphis-LATA	15-19	
15.9.4 Nashville-LATA	15-20	
16. BELLSOUTH TELECOMMUNICATIONS RELAY SERVICE TRANSPORT	16-1	
16.1 BellSouth Telecommunications Relay Service Transport		
16.1.1 General Description	16-1	
16.1.2 Undertaking of the Telephone	16-1	
16.1.3 Obligation of the Customer	16-1	
16.1.4 Jurisdictional Report Requirements	16-2	
16.1.5 Ordering Provisions	16-2	
16.1.6 Interface Cost Combinations	16-2	
16.1.7 Rate Regulations	16-2	
16.1.8 Rates and Charges	16-3	
17. RESERVED FOR FUTURE USE	17-1	

Certain material previously appearing on this page now appears on 3rd Revised Page 27.0.1.

Certain material now appearing on this page previously appeared on Original Page 26.

All BellSouth marks contained herein and as set forth in the trademarks and servicemarks section of this Tariff are owned by BellSouth Intellectual Property Corporation.
****

ACCESS SERVICE

TABLE OF CONTENTS (Cont'd)

	Page No.	
18. BELLSOUTH OPERATOR SERVICES	18-1	
18.1 BellSouth Operator Transfer Service	18-1	
18.1.1 General Description	18-1	
18.1.2 Undertaking of the Telephone Company	18-1	
18.1.3 Obligations of the Customer	18-2	
18.1.4 Rate Regulations	18-3	
18.1.5 Rates and Charges	18-3	
18.2 BellSouth Inward Operator Services	18-4	(T)
18.2.1 General Description	18-4	
18.2.2 Undertaking of the Telephone Company	18-4	
18.2.3 Obligations of the Customer	18-6	
18.2.4 Rate Regulations	18-6	
18.2.5 Rates and Charges	18-7	
18.3 BellSouth Operator Assistance Access Service	18-8	(T)
18.3.1 General Description	18-8	
18.3.2 Operator Assistance Trunks (OA Trunks)	18-9	
18.3.3 Obligations of the Customer	18-10	
18.3.4 Rate Regulations and Payment Arrangements	18-11	
18.3.5 Rates and Charges	18-16	(T)
19. BELLSOUTH LINE INFORMATION DATA BASE ACCESS SERVICE	19-1	
19.1 General Description	19-1	
19.2 Obligations of the Telephone Company	19-3	(T)
19.3 Obligations of the Customer	19-4	(T)
19.4 Ordering Requirements and Payment Arrangements	19-4	(T)
19.5 Jurisdictional Report Requirements	19-5	
19.6 Rate Regulations	19-5	(T)
19.7 Rates and Charges	19-7	(T)

All BellSouth marks contained herein and as set forth in the trademarks and servicemarks section of this Tariff are owned by BellSouth Intellectual Property Corporation.
****

ACCESS SERVICE

TABLE OF CONTENTS (Cont'd)

		Page No.	
20.	BELLSOUTH EXPANDED INTERCONNECTION SERVICE	20-1	(T)
20.1	BellSouth Virtual Expanded Interconnection Service	20-1	(T)
20.1.1	Service Description	20-1	
20.1.2	Regulations	20-1	
20.1.3	Limitations	20-2.1	
20.1.4	Service Application	20-4	
20.1.5	Service Activation	20-4.1	
20.1.6	Training	20-5	
20.1.7	Inspections	20-5	
20.1.8	Reserved For Future Use	20-5	
20.1.9	Maintenance	20-6	
20.1.10	Liability and Damages	20-6	
20.1.11	Confidential Information	20-10	
20.1.12	Title	20-10	
20.1.13	Force Majeure	20-10	
20.1.14	Rate Regulations	20-11	
20.1.14.1	BellSouth Virtual Expanded Interconnection Elements	20-11	
20.1.14.2	Access Service Elements	20-13	

All BellSouth marks contained herein and as set forth in the trademarks and servicemarks section of this Tariff are owned by BellSouth Intellectual Property Corporation.
****

ACCESS SERVICE

TABLE OF CONTENTS (Cont'd)

	Page No.	
20. BELLSOUTH EXPANDED INTERCONNECTION SERVICE (Cont'd)		
20.2 Reserved For Future Use	20-13	
20.3 Reserved For Future Use	20-13	(T)
20.4 Rates and Charges		
20.4.1 BellSouth Virtual Expanded Interconnection Service	20-16	
		(D)
		(D)

All BellSouth marks contained herein and as set forth in the trademarks and servicemarks section of this Tariff are owned by BellSouth Intellectual Property Corporation.

****

ACCESS SERVICE

TABLE OF CONTENTS (Cont'd)

		Page No.	
21.1	EXCHANGE ACCESS FRAME RELAY SERVICE (a.k.a. BELLSOUTH EXCHANGE ACCESS FRAME RELAY SERVICE)	21-1	
21.0.1	Application Testing	21-1.0.1	(N)
21.1.1	General Description	21-1.0.3	(T)
21.1.2	Service Description	21-2	
21.1.3	Technical Specifications	21-3	
21.1.4	Interface Specifications	21-4	
21.1.5	Acceptance Testing	21-4	
21.1.6	Ordering Options and Conditions	21-4	
21.1.7	Minimum Period of Service	21-4	
21.1.8	Rate Regulations	21-4	
21.1.9	Rate Categories	21-5	(T)
21.1.10	Rates and Charges	21-7	

All BellSouth marks contained herein and as set forth in the trademarks and servicemarks section of this Tariff are owned by BellSouth Intellectual Property Corporation.
****

ACCESS SERVICE

TABLE OF CONTENTS (Cont'd)

		Page No.	
21.2	EXCHANGE ACCESS CONNECTIONLESS DATA SERVICE (XACDS) (a.k.a. BELLSOUTH EXCHANGE ACCESS CONNECTIONLESS DATA SERVICE)	21-10	
21.2.1	General Description	21-10	
21.2.2	Service Description	21-10	
21.2.3	Technical Specifications	21-12	
21.2.4	Interface Specifications	21-12	
21.2.5	Acceptance Testing	21-12	
21.2.6	Ordering Options and Conditions	21-12	
21.2.7	Minimum Period of Service	21-12	
21.2.8	Rate Regulations	21-12	
21.2.9	Rate Categories	21-13	
21.2.10	Rates and Charges	21-15	(T)
21.3	BELLSOUTH EXCHANGE ACCESS ASYNCHRONOUS TRANSFER MODE SERVICE (XAATMS)	21-17	
21.3.1	General Description	21-17	
21.3.2	Service Description	21-21	
21.3.3	Technical Specifications	21-22	
21.3.4	Interface Specifications	21-23	
21.3.5	Acceptance Testing	21-23	
21.3.6	Ordering Options and Conditions	21-23	
21.3.7	Minimum Period of Service	21-23	
21.3.8	Rate Regulations	21-23	
21.3.9	Rate Categories	21-23.1	(T)
21.3.10	Rates and Charges	21-26	

All BellSouth marks contained herein and as set forth in the trademarks and servicemarks section of this Tariff are owned by BellSouth Intellectual Property Corporation.
****

ACCESS SERVICE

TABLE OF CONTENTS (Cont'd)

		Page No.	
21.4	MANAGED SHARED FRAME RELAY SERVICE (MSFRS)	21-28	
21.4.1	General Description	21-28	
21.4.2	Service Description	21-30	
21.4.3	Technical Specifications	21-31	
21.4.4	Interface Specifications	21-32	
21.4.5	Acceptance Testing	21-32	
21.4.6	Ordering Options and Conditions	21-32	
21.4.7	Minimum Period of Service	21-32	
21.4.8	Rate Regulations	21-32	
21.4.9	Rate Categories	21-32.1	(T)
21.4.10	Rates and Charges	21-38	
21.5	MANAGED SHARED ATM SERVICE (MSATMS)	21-45	
21.5.1	General Description	21-45	
21.5.2	Service Description	21-51.2	(T)
21.5.3	Technical Specifications	21-52	
21.5.4	Interface Specifications	21-53	
21.5.5	Acceptance Testing	21-53	
21.5.6	Ordering Options and Conditions	21-53	
21.5.7	Minimum Period of Service	21-53	
21.5.8	Rate Regulations	21-53	
21.5.9	Rate Categories	21-53.1	(T)
21.5.10	Rates and Charges	21-59	

All BellSouth marks contained herein and as set forth in the trademarks and servicemarks section of this Tariff are owned by BellSouth Intellectual Property Corporation.
****

ACCESS SERVICE

TABLE OF CONTENTS (Cont'd)

	Page No.	
21. FAST PACKET ACCESS SERVICES (Cont'd)		(N)
21.6 BellSouth Network Visibility Service	21-64	(N)
21.6.1 General Description	21-64	(N)
21.6.2 Maintenance	21-68	(N)
21.6.3 Minimum Period of Service	21-68	(N)
21.6.4 Rate Regulations	21-68	(N)
21.6.5 Rate Categories	21-69	(N)
21.6.6 Rates and Charges	21-70	(N)

****

ACCESS SERVICE

TABLE OF CONTENTS (Cont'd)

		Page No.	
23.	Metropolitan Statistical Area Access Services		
23.1	General Regulations	23-1	
23.2	Metropolitan Statistical Areas	23-2	
23.3	Services Available in an MS	23-3	
23.4	Application of Rates and Charges	23-4	
23.5	Rates and Charges	23-9	
23.6	Pricing Flexibility USOC Indicators	23-598	
24.	BellSouth Wire Center Information		
24.1	General	24-1	
24.2	Metropolitan Statistical Area Wire Centers	24-1	
24.2.1	Full Service Relief MSA's	24-1	
24.2.2	Limited Service Relief MSA's	24-23	
24.3	BellSouth SWA Metropolitan Statistical Area Wire Centers	24-32	(N)
24.3.1	BellSouth SWA MSAs	24-32	(N)
25.	Contract Tariffs		
25.1	Contract Tariff – No. 001	25-1	
25.1.1	General Regulations	25-1	
25.1.2	Annual Revenue Volumes and Incentives	25-8	
25.2	Contract Tariff – No. 002	25-9	
25.2.1	General Regulations	25-9	
25.2.2	Annual Revenue Volumes and Incentives	25-21	

Certain material previously appearing on this page, now appears on Original page 27.6.1.

All BellSouth marks contained herein and as set forth in the trademarks and servicemarks section of this Tariff are owned by BellSouth Intellectual Property Corporation.
****

ACCESS SERVICE

TABLE OF CONTENTS (CONT'D)

25. Contract Tariffs (Cont'd)		Page No.	
25.3	Contract Tariff – No. 003	25-22	(M)
25.3.1	General Regulations	25-22	(M)
25.3.2	Revenue Volumes and Incentives	25-31	(M)
25.4	Contract Tariff – No. 004	25-32	(M)
25.4.1	General Regulations	25-32	(M)
25.4.2	Revenue Volumes and Incentives	25-41	(M)
25.5	Contract Tariff – No. 005	25-42	(N)
25.5.1	General Regulations	25-42	(N)
25.5.2	Revenue Volumes and Incentives	25-56	(N)

Certain material now appearing on this page previously appeared on page 4th Revised page 27.6.

All BellSouth marks contained herein and as set forth in the trademarks and servicemarks section of this Tariff are owned by BellSouth Intellectual Property Corporation.
****

ACCESS SERVICE

TABLE OF CONTENTS (CONT'D)

25. Contract Tariffs (Cont'd)

25.6	Special Promotion – BellSouth ADSL Service	25-57	
25.6.1	General Regulations	25-57	
25.6.2	Description of Special Promotion	25-58	
25.7	Promotions	25-60	(T)
25.7.1	BellSouth ADSL Service – Promotion 1	25-60	(T)
25.7.1.1	General Regulations	25-60	(T)
25.7.1.2	Description	25-61	
25.7.2	BellSouth ADSL Service – Promotion 2	25-62.1	
25.7.2.1	General Regulations	25-62.1	(T)
25.7.2.2	Description	25-62.2	
25.7.3	BellSouth ADSL Service – Promotion 3	25-62.3	
25.7.3.1	General Regulations	25-62.3	(T)
25.7.3.2	Description	25-62.3	
25.7.4	Special Promotion-LightGate Svc. (a.k.a. BellSouth SPA Point to Point)	25-62.4	
25.7.4.1	General Regulations	25-62.4	
25.7.4.2	Eligibility Requirements	25-62.4	
25.7.4.3	Description	25-62.5	
25.7.5	BellSouth ADSL Service – Promotion 4	25-62.6	
25.7.5.1	General Regulations	25-62.6	(T)
25.7.5.2	Description	25-62.6	
25.7.6	Special Promotion – LightGate Svc. (a.k.a. BellSouth SPA Point to Point)	25-62.7	
25.7.6.1	General Regulations	25-62.7	(T)
25.7.6.2	Eligibility Requirements	25-62.7	
25.7.6.3	Description	25-62.8	

All BellSouth marks contained herein and as set forth in the trademarks and servicemarks section of this Tariff are owned by BellSouth Intellectual Property Corporation.
****

ACCESS SERVICE

TABLE OF CONTENTS (CONT'D)

25. Contract Tariffs (Cont'd)

25.7	Promotions (Cont'd)		
25.7.7	BellSouth ADSL Service – Promotion 5	25-62.9	
25.7.7.1	General Regulations	25-62.9	(T)
25.7.7.2	Description	25-62.9	
25.7.8	BellSouth ADSL Service – Promotion 6	25-62.10	
25.7.8.1	General Regulations	25-62.10	(T)
25.7.8.2	Description	25-62.12	
25.8	Contract Tariff – No. 006	25-63	
25.8.1	General Regulations	25-63	
25.8.2	Revenue Volumes and Incentives	25-81	
25.9	Contract Tariff – No. 007	25-82	
25.9.1	General Regulations	25-82	
25.9.2	Revenue Volumes and Incentives	25-99	
25.10	Contract Tariff – No. 008	25-100	
25.10.1	General Regulations	25-100	
25.10.2	Revenue Volumes and Incentives	25-117	
25.11	Contract Tariff – No. 009	25-118	
25.11.1	General Regulations	25-118	
25.11.2	Revenue Volumes and Incentives	25-129	
25.12	Contract Tariff – No. 010	25-130	
25.12.1	General Regulations	25-130	
25.12.2	Revenue Volumes and Incentives	25-158	
25.13	Contract Tariff – No. 011	25-159	
25.13.1	General Regulations	25-159	
25.13.2	Revenue Volumes and Incentives	25-176	

All BellSouth marks contained herein and as set forth in the trademarks and servicemarks section of this Tariff are owned by BellSouth Intellectual Property Corporation.
****

ACCESS SERVICE

TABLE OF CONTENTS (CONT'D)

26. BellSouth SWA Contract Tariffs

26.1	BellSouth SWA Contract Tariff No. 2002-01	26-1	
26.1.1	General Regulations	26-1	
26.1.2	Subscription Conditions	26-1	
26.1.3	Mergers and Acquisitions and Transfer of Service	26-3	
26.1.4	BellSouth SWA Revenue Volume Discounts	26-4	
26.1.5	BellSouth SWA Contract Tariff No. 2002-01 Volume Discount Plan	26-5	
26.2	BellSouth SWA Contract Tariff No. 2003-01	26-7	
26.2.1	General Regulations	26-7	
26.2.2	Subscription Conditions	26-7	
26.2.3	Mergers and Acquisitions and Transfer of Service	26-9	
26.2.4	BellSouth SWA Revenue Volume Discounts	26-10	(T)
26.2.5	BellSouth SWA Contract Tariff No. 2003-01 Volume Discount Plan	26-11	

27. Reserved For Future Use

28. Digital Subscriber Line Service 28-1

28.1	BellSouth® Enterprise DSL Service	28-1	
28.1.1	Service description	28-1	
28.1.2	Acceptance Testing	28-6	
28.1.3	Payment Arrangements and Credit Allowances	28-6	
28.1.4	Ordering Options	28-7	
28.1.5	Order Modification	28-8	
28.1.6	Service Configuration	28-9	
28.1.7	Rate Regulations	28-10	
28.1.7.7	Minimum Periods	28-16	(T)
28.1.8	Miscellaneous	28-16	(T)
28.1.9	Rates and Charges	28-17	(T)

All BellSouth marks contained herein and as set forth in the trademarks and servicemarks section of this Tariff are owned by BellSouth Intellectual Property Corporation.

****

ACCESS SERVICE

TABLE OF CONTENTS (CONT'D)

28. Digital Subscriber Line Service (Cont'd)

28.2	BellSouth ADSL Service	28-18	(T)
28.2.1	General	28-18	(T)
28.2.2	Technical Specifications Package	28-23	(T)
28.2.3	Acceptance Testing	28-23	
28.2.4	Ordering Options and Conditions	28-23	
28.2.5	Minimum Service Periods	28-24	
28.2.6	Responsibility of the Telephone Company	28-24	
28.2.7	Responsibility of the Customer	28-25	
28.2.8	Rate Regulations	28-26	
28.2.9	Promotions	28-39	
28.2.10	Rates and Charges	28-40	
28.3	BellSouth Session Based DSL Service	28-44	
28.3.1	General	28-44	(T)
28.3.2	Technical Specifications Package	28-48	(T)
28.3.3	Acceptance Testing	28-48	
28.3.4	Ordering Options and Conditions	28-48	(T)
28.3.5	Minimum Service Periods	28-49	
28.3.6	Responsibility of the Telephone Company	28-49	
28.3.7	Responsibility of the Customer	28-50	
28.3.8	Rate Regulations	28-50	
28.3.9	Rates and Charges	28-58	

29. Optical Transport Access Services

29.1	BellSouth Wavelength Service	29-1	
29.1.1	General Regulations	29-1	
29.1.2	Technical Specifications	29-2	
29.1.3	Ordering Options and Conditions	29-2	
29.1.4	Minimum Period	29-2	
29.1.5	Allowance for Interruptions	29-2	
29.1.6	Regulations	29-3	
29.1.7	Rate Regulations	29-3	
29.1.8	Rate Categories	29-5	(T)
29.1.9	Rates and Charges	29-6	(T)

All BellSouth marks contained herein and as set forth in the trademarks and servicemarks section of this Tariff are owned by BellSouth Intellectual Property Corporation.
****

ACCESS SERVICE TARIFF SUBJECT INDEX

The following information is an alphabetized listing by subject of terms and services which appear in BellSouth Telecommunication's, Inc.'s FCC No. 1. This material is intended only as an aid in locating information contained in this tariff.

Subject	Section No.	Page No.	
Abbreviations	-	70	
Abusive Use/Unlawful Use	2.2.2	2-9	
Acceptance Testing			
BellSouth Directory Access Service	9.1.2(E)(7)	9-6	(T)
Special Access (a.k.a. BellSouth SPA)	7.1.7	7-15	(T)
BellSouth SWA service	6.1.6	6-28	(T)
Access Code			
definition	2.6	2-49.2	
BellSouth SWA FGA	6.2.1(A)(4)	6-31	(T)1
BellSouth SWA FGB	6.2.2(A)(4)	6-36	(T)1
BellSouth SWA FGC	6.2.3(A)(4)	6-40	(T)1
BellSouth SWA FGD	6.2.4(A)(6)	6-46	(T)
Access Minutes			
assumed average	6.7.8	6-142	
definition	2.6	2-50	
BellSouth SWA FGA	6.7.1(E)(1)	6-132	(T)
BellSouth SWA FGB	6.7.1(E)(1)	6-132	(T)
measuring and recording of call detail	3.8.2	3-14	
Access Order			
BellSouth SWA and Special Access			(T)
(a.k.a. BellSouth SPA)	5.2	5-3	(T)
access services provided by more than one telephone company	2.4.7	2-36	
additional engineering	5.1.2(C)	5-2	
cancellation	5.4	5-15	
BellSouth CCSAC	5.2.2(D)	5-5	(T)
definition	2.6	2-50.1	
BellSouth Directory Assistance Service	5.2.6	5-8.1	(T)

****

ACCESS SERVICE TARIFF SUBJECT INDEX

Subject	Section No.	Page No.	
BellSouth SWA FGA	5.2.2(A)	5-4	
BellSouth SWA FGB	5.2.2(B)	5-4	
BellSouth SWA FGC and BellSouth SWA FGD	5.2.2(C)	5-5	
BellSouth SWA 8XX Toll Free Dialing Ten Digit Screening Service	5.2.4	5-7	
minimum period	5.6	5-21	
other services	5.1.2	5-2	
selection of facilities	5.5	5-20	
service date intervals	5.1.	15-1	
shared use facilities	5.7	5-23	
special access service (a.k.a. BellSouth SPA) and BellSouth SWA Transport Service	5.2.7(A)	5-9	
standard intervals	5.1.1	5-1	
WATS access line (a.k.a. BellSouth SPA WATS Line) optional feature	5.2.7(C)	5-9	
Access Order Modifications			
Design Change Charge	5.3(C)(3)	5-13	
request	5.3(A)	5-11.1.1	(T)
Service Date Change Charge	5.3(C)(1)	5-11.2	
Access Tandem, definition	2.6	2-50	
Access Tandem Network			
definition	2.6	2-50	
directory transport	9.1.2(E)(3)	9-3	
specification for BellSouth SWA FGB	5.2.2(B)(3)	5-4	
Access Tandem Switching			
definition	2.6	2-50	
rate application	6.1.3(A)(3)	6-11.4	
Access to Order Entry	13.3.10(A)(2)(a)	13-61	
Access to Premises			
failure to provide	2.4.4(C)(3)	2-34	
obligation of the customer	2.3.3	2-10	
Acts of God. See Disasters.			
Additional Cooperative Acceptance Testing			
rate and charges - BellSouth SWA	13.3.5(C)(1)	13-31	
rates and charges - special access (a.k.a. BellSouth SPA)	13.3.5(C)(2)	13-43	
Additional Engineering, Additional Labor, and Miscellaneous Services	13.	13-1	
Additional Engineering applied to access order	5.1.2(C)	5-2.1	

****

ACCESS SERVICE TARIFF SUBJECT INDEX

Subject	Section No.	Page No.	
estimated charge	5.1.2(C)	5-2.1	
charges	13.1.1	13-1	
overtime charge	13.1.1(B)	13-1	
Additional Labor			
charges	13.2.6	13-3	
ordered with access order	5.1.2(A)	5-2	
other labor	13.2.5	13-3	
overtime installation	13.2.1	13-2	
overtime repair			
stand by	13.2.3	13-2	
testing and maintenance with other telephone companies	13.2.4	13-2	
Additional Labor (I/R)			
Overtime and Premium Time	13.2.6(A)	13-3	
Standby Charge	13.2.6(B)	13-3	
Adjustments for Quantities of Services	2.4.1(C)	2-25	
Administrative Changes			
Special Access (a.k.a. BellSouth SPA)	7.4.1(C)(3)	7-71	(T)
BellSouth SWA	6.7.1(D)	6-128	(T)
BellSouth Administrative Management Service	13.3.10	13-61	(T)
Service Description	13.3.10(A)	13-61	
Provision of Service	13.3.10(B)	13-63	
Rates and Charges	13.3.10(F)	13-67	
Airport Service, End User Common Line	4.6(C)	4-3	
Alternative Service, due to Service Interruption	2.4.4(D)	2-35	
Alternate Use	7.1.4	7-15	
Answer/Disconnect Supervision, definition	2.6	2-51	
Application of Tariff	1.	1-1	
Assignment or Transfer of Services by Customer	2.1.2(A)	2-1	
Assumed Average Interstate Access Minutes. See Access Minutes.			
Attenuation Distortion			
definition	2.6	2-51	
type A transmission specifications	6.4.1(A)(2)	6-109	
type B transmission specifications	6.4.1(B)(2)	6-110	
type C transmission specifications	6.4.1(C)(2)	6-113	

****

ACCESS SERVICE TARIFF SUBJECT INDEX

Subject	Section No.	Page	
Automatic Loop Transfer	7.2.9(E)(1)	7-51	
Automatic Protection Switching	7.2.9(E)(1)	7-51	
Availability for Testing	2.3.4	2-10	
Avoidance			
description	11.1(B)	11-1	
rates and charges	11.2.2	11-2	
B8ZS Line Code			
definition	2.6	2-51	
Balance	2.3.5	2-10	
Balance (100 Type) Test Line, definition	2.6	2-51	
Balance parameters, testing			
Special Access (a.k.a. BellSouth SPA), testing	7.1.7(A)	7-16	
Basic Channelization System			
Special Access (a.k.a. BellSouth SPA)	7.1.1	7-1	
BellSouth SWA	6.1.3	6-11.1	
Basic Service Elements Generic Names			
Access to Order Entry	13.3.10(A)(2)(a)	13-61	
Automatic Protecting Switching	7.2.9(E)(1)	7-51	
Bridging			
Digital Data (a.k.a. BellSouth SPA DSO Digital Data)	7.2.8(D)(1)	7-45	
Metallic (a.k.a. BellSouth SPA Metallic)	7.2.1(D)(1)	7-20	
Program Audio (a.k.a. BellSouth SPA Program Audio)	7.2.4(D)(1)	7-36	
Telegraph (a.k.a. BellSouth SPA Telegraph)	7.2.2(D)(1)	7-21	
Voice Grade (a.k.a. BellSouth SPA DSO VG)	7.2.3(D)(1)	7-23	
WAL Access Line (a.k.a. BellSouth SPA WATS Line)	7.2.3.1(D)(1)	7-34	(S)1
Calling Billing Number Delivery	6.3.3(A)(11)	6-92	(S)
BellSouth SWA FGD			(S)
Calling Directory Number Delivery via BCLID	6.3.3(A)(6)	6-89	
Dialed Number Identification via INWATS to DID	6.3.5(A)(1)	6-100	
Faster Signaling on DID	6.3.3(A)(10)	6-91	
Make Busy Key	6.3.3(A)(9)	6-91	
Message Desk (SMDI)	6.3.3(A)(4)	6-88	
Multiline Hunt Group	6.3.3(A)(1)	6-87.2	
Individual Access to each group in Hunt Group	6.3.3(A)(3)	6-88	
UCD with Queuing	6.3.3(A)(7)	6-89	

(S) Originally filed under TN377 scheduled to become effective December 16, 1996.

(x) Issued under the authority of F.C.C. Report and Order FCC 96-388 In The Matter of Implementation of the Pay Telephone Reclassification and Compensation Provisions of the Telecommunications Act of 1996. CC Docket No. 96-128, released September 20, 1996, as modified in the RECONSIDERATION ORDER, FCC 96-439, released November 8, 1996.

****

ACCESS SERVICE TARIFF SUBJECT INDEX

Subject	Section No.	Page	
Basic Service Elements Generic Names (Cont'd)			
Network Configuration			
Digital Data Access Service	7.2.8(D)(4)	7-47	
(a.k.a. BellSouth SPA Digital Data)			
High Capacity Service	7.2.9(E)(4)	7-54	
(a.k.a. BellSouth SPA High Capacity)			
Voice Grade			
(a.k.a. BellSouth SPA DSO VG)	7.2.3(D)(12)	7-30	
Optional Priority Installation and Repair Service			
Additional Labor	13.2	13-2	
Expedited Service Order	5.3(C)(4)	5-14	
Packet Switch			
Fast Select Packet	7.5.8(G)	7-142	
Packet Switching Options			
CUG, Hunt Group, Call Redirection, Direct Call	7.2.8(D)(3)	7-46	
Private Line Conditioning	7.2.3(D)(2)	7-23	
Route Diversity	11.1(A)	11-1	
Secondary Channel			
capability	7.2.8(A)	7-44	
definition	2.6	2-68	
Surrogate Client Numbers	6.3.3(A)(5)	6-88.1	
Three Way Call Transfer	6.3.3(A)(8)	6-90	
User Initiated Diagnostics	13.3.10(A)(2)(a)	13-62	
BellSouth Dedicated Ring			
credit allowance	2.4.4(B)(8)	2-33	
rate categories	6.1.3(A)(10)	6-25.8	
service configurations	6.1.3(A)(10)	6-25.11	
service descriptions	6.2.10(A)	6-75.8	
rate regulations	6.7.20	6-155.1	
rates and charges	6.8.1	6-160.4	
BellSouth Managed Shared Ring			
credit allowance	2.4.4(B)(12)	2-33.3	
rate categories	6.1.3.(A)(11)	6-25.16	
service descriptions	6.2.11(A)	6-75.13	
rate regulations	6.7.21	6-157.1.0.1	
rates and charges	6.8.1	6-160.11	
BellSouth SWA Contract Tariffs	26	26-1	(N)
BellSouth Wire Center Information	24	24-1	
Bill day			
description	2.4.1(B)	2-21	
end user access service	2.4.1(B)(1)	2-22	
federal government	2.4.1(B)	2-21	
other services	2.4.1(B)(2)	2-22	
presubscription Service	2.4.1(B)(1)	2-22	
Billing			
carrier common line access	3.8.1	3-14	
end user access	4.6(A)	4-2	
federal government access services	10.5	10-2	
general regulations	2.4.1	2-21	
more than one exchange telephone company providing access	2.4.7	2-36	

****

ACCESS SERVICE TARIFF SUBJECT INDEX

Subject	Section No.	Page No.	
Billing Dispute			
general regulations	2.4.1(B)(3)(c)	2-24	
jurisdictional report verification	2.3.10(B)	2-17	
Billing Information, provision of Access Service	13.3.6	13-45	(D)(x)
Bit, definition	2.6	2-52	
Bridging			
Digital Data (a.k.a. BellSouth SPA DSO	7.2.8(D)(1)	7-45	(S)
Digital Data)			(S)
Metallic (a.k.a. BellSouth SPA Metallic)	7.2.1(D)(1)	7-20	(S)
Program Audio (a.k.a. BellSouth SPA	7.2.4(D)(1)	7-36	(S)
Program Audio)			(S)
Telegraph (a.k.a. BellSouth SPA Telegraph)	7.2.2(D)(1)	7-21	(S)
Voice Grade (a.k.a. BellSouth SPA DSO VG)	7.2.3(D)(1)	7-23	(S)
WAL Access Line (a.k.a. BellSouth SPA WATS Line)	7.2.3.1(D)(1)	7-34	(S)
Business Day, definition	2.6	2-52	
Cable-Only Facilities			
description	11.1.(C)	11-1	
rates and charges	11.2.4	11-3	
Call, definition	2.6	2-52.1	
Calling Billing Number Delivery BellSouth SWA FGD	6.3.3(A)(11)	6-92	(S)
Calling Directory Number Delivery via BCLID	6.3.3(A)(6)	6-89	
Calling Party Number	6.3.2(A)(16)	6-86	
Cancellation			
access order	5.4(A)	5-15	
application for end user access service	4.5(B)	4-2	
due to Telco missed service date	5.4(E)	5-20	
order for BellSouth Directory Assistance service	9.1.4(B)	9-8	(S)

(S) Originally filed under TN377 scheduled to become effective December 16, 1996.

(x) Issued under the authority of F.C.C. Report and Order FCC 96-388 In The Matter of Implementation of the Pay Telephone Reclassification and Compensation Provisions of the Telecommunications Act of 1996. CC Docket No. 96-128, released September 20, 1996, as modified in the RECONSIDERATION ORDER, FCC 96-439, released November 8, 1996.

****

ACCESS SERVICE TARIFF SUBJECT INDEX

Subject	Section No.	Page No.	
Cancellation Charge			
access order	5.4(B)(4)(d)	5-18	
discontinuance of service	5.4(D)	5-20	
partial	5.3(C)(2)	5-12	
telephone company missed service date	5.4(E)	5-20	
Cancellation Date, definition	5.4(A)	5-15	
Carrier(s). See Interexchange Common Carrier; Concurring Carriers; Connecting Carriers; Issuing Carriers; Other Participating Carriers;		69	
Carrier Common Line Access Service			
assumed average minutes (unmeasured BellSouth SWA FGA/BellSouth SWA FGB)	3.8.3	3-15	(S) (S) (D)(x) (D)(x)
billing of charges	3.8.1	3-14	(D)(x)
customer obligations	3.4	3-2	
Customer usage recording	3.5.2	3-3	
description	3.1	3-1	
detail billing not provided	3.2.1	3-1	
directory listing not included	3.2.1	3-1	
documentation of usage	3.6.3	3-5	
equal access transition-rate application	3.8.5	3-15	
exemption certification of surcharge	7.4.2(D)	7-77	
intercept arrangements not included	3.2.1	3-1	
limitations	3.2	3-1	(D)(x) (D)(x) (D)(x) (D)(x)
rate regulations	3.8	3-14	
rates and charges	3.9.1	3-18	(D)(x)
resold MTS/MTS-type	3.6.1	3-4	
- equal access offices	3.6.4(E)	3-8	
- non-equal access offices	3.6.4(D)	3-8	
- non-equal and equal access offices	3.6.4(F)	3-9	
resold private line	3.5.3	3-3	
telephone number assignment	3.2.1	3-1	

(S) Originally filed under TN 377 scheduled to become effective December 16, 1996.

(x) Issued under the authority of F.C.C. Report and Order FCC 96-388 In The Matter of Implementation of the Pay Telephone Reclassification and Compensation Provisions of the Telecommunications Act of 1996. CC Docket No. 96-128, released September 20, 1996, as modified in the RECONSIDERATION ORDER, FCC 96-439, released November 8, 1996.

****

ACCESS SERVICE TARIFF SUBJECT INDEX

Subject	Section No.	Page No.	
Carrier Selection Parameter	6.3.2(A)(17)	6-86	
CCS, definition	2.6	2-53	
BellSouth SWA CCSAC			
description	6.1.3(A)(7)(e)	6-25	(T)
CCS7 signaling connections	5.2.3(C)	5-7	
CCS7 signaling terminations	5.2.3(C)	5-7	
technical specifications	6.1.3(A)	6-11	
testing requirements	6.1.8	6-29	
CCS7 Access Arrangement Usage	6.1.3(C)(2)	6-27.3	(N)
Central Office, definition	2.6	2-53	
Central Office Bridging Capability			
Digital Data Access Service (a.k.a. BellSouth SPA DSO Digital Data)	7.2.8(D)(1)	7-45	
Metallic Service (a.k.a. BellSouth SPA Metallic)	7.2.1(D)(1)	7-20	
Program Audio Service (a.k.a. BellSouth SPA Program Audio)	7.2.4(D)(1)	7-36	
Voice Grade Service (a.k.a. BellSouth SPA DSO VG)	7.2.3(D)(1)(a)	7-23	
Central Office Channel Interface	7.5.9(D)(3)	7-149	
Central Office Channelization			
High Capacity Service (a.k.a. BellSouth SPA High Capacity)			
Special Access (a.k.a. BellSouth SPA)	7.2.9(E)(2)	7-52	
BellSouth SWA	6.1 3(A)(7)(c)	6-25.4	
Central Office Prefix			
assignment by telephone company	2.1.12	2-8	
definition	2.6	2-53	
Centrex CO and Centrex CO-like			
definition	4.6(C)	4-3	
end user common line rate	4.7(C)	4-7	
federal universal service charge	4.7(E)	4-9	
Centrex Dormitory Service			
end user common line rate	4.6(C)	4-3	
federal universal service charge	4.7(E)	4-9	
Changes in Facilities, Operations, or	4.7(C)	4-7	
necessitating customer design changes	2.3.6	2-10	
procedures of telephone company	2.1.7	2-5	
Changes to Orders for End User Access Service	4.5(C)	4-2	
Channel(s)			
definition	2.6	2-53.1	
specification for High Capacity (a.k.a. BellSouth SPA High Capacity) Facilities to a Hub			
Special Access (a.k.a. BellSouth SPA)	6.7.17	6-155.1	
BellSouth SWA	7.4.7	7-82	
specification for shared use facilities	5.7	5-23	

****

ACCESS SERVICE TARIFF SUBJECT INDEX

Subject	Section No.	Page No.	
Channel Interface			
specification for special access services (a.k.a. BellSouth SPA)	5.2.7(A)	5-9	
specification for BellSouth SWA services	5.2.7(B)	5-9	
Channel Interfaces and Network Channel Codes	7.3	7-58.1	
compatible channel interfaces	7.3.5	7-68	
digital hierarchy channel interface codes	7.3.3	7-66	
glossary of channel interface codes and options	7.3.1	7-59	
impedance, parameters	7.3.2	7-66	
service designator/network channel code conversion table	7.3.4	7-67	
Channel Service Unit, definition	2.6	2-53.1	
Channel Types, Special Access (a.k.a. BellSouth SPA) Service-description	7.1.1	7-1	
Channelize, definition	2.6	2-54	
Charges - General			
discontinuance of service for non-compliance	2.1.8(A)	2-6	
discontinuance prior to expiration of minimum period	2.4.2	2-28.3	(T)
mixed interstate and intrastate BellSouth SWA and PPSN packet usage	2.3.11	2-18.4	
multiline hunt group or trunk group arrangements with interstate or intrastate charges based on measured usage	2.3.10(A)(3)	2-14	
reestablishment of service following disaster	2.4.5	2-35	
wire to extend facilities within a building	2.1.5	2-5	
Charge Number	6.3.1(Z)	6-100	
Charges, Rates, and Deposits, Payment of See Payment Arrangements; Credit Allowance.			
Civil Commotions. See Disasters; Emergency Conditions.			
Civil Disturbance. See Disasters; Emergency Conditions.			
Claims for Damages			
claims and demands by customer	2.3.8	2-11	
damage to property	2.3.8(B)	2-11	
death	2.3.8(B)	2-11	
explosive atmosphere	2.1.3(F)	2-4	
limitation	2.1.3(A)	2-2	

All BellSouth marks contained herein and as set forth in the trademarks and servicemarks section of this Tariff are owned by BellSouth Intellectual Property Corporation.
****

ACCESS SERVICE TARIFF SUBJECT INDEX

Subject	Section No.	Page No.	
libel, slander	2.1.3(D)(1)	2-3	
obligations of the customer	2.3	2-9	
patent infringement	2.1.3(D)(2)	2-3	
personal injury	2.3.8(A)	2-11	
worker's compensation	2.3.8(B)	2-11	
Clear Channel Capability			
definition	2.6	2-54	
rates and charges	7.5.9	7-145	
64 Clear Channel Capability	6.1.3(A)(6)(f)	6-25.1	
Charges	6.8.8(F)	6-177	
C-Message Noise			
definition	2.6	2-54	
type A transmission specifications	6.4.1.(A)(3)	6-109	(D)(x)
type B transmission specifications	6.4.1.(B)(3)	6-111	(D)(x)
type C transmission specifications	6.4.1.(C)(3)	6-113	(D)(x)
C-Notched Noise			
definition	2.6	2-54	(D)(x)
type A transmission specifications	6.4.1(A)(4)	6-110	(D)(x)
type B transmission specifications	6.4.1(B)(4)	6-111	(D)(x)
type C transmission specifications	6.4.1(C)(4)	6-113	(D)(x)
Common Carrier. See Interexchange Common Carrier.			
Common Line			
definition	2.6	2-54	
rate categories	6.1.3	6-8	
Common Switching Functions	6.1.3(B)	6-26	
Common Transport (BellSouth SWA)	6.1.3(A)(2)	6-11.2	(S)
Communications System, definition	2.6	2-55	
Compatible Channel Interface Codes			
Digital Data Service	7.3.5(H)	7-69	
(a.k.a. BellSouth SPA DSO Digital Data)			(S)

(S) Originally filed under TN377 scheduled to become effective December 16, 1996.

(x) Issued under the authority of F.C.C. Report and Order FCC 96-388 In The Matter of Implementation of the Pay Telephone Reclassification and Compensation Provisions of the Telecommunications Act of 1996. CC Docket No. 96-128, released September 20, 1996, as modified in the RECONSIDERATION ORDER, FCC 96-439, released November 8, 1996.

****

ACCESS SERVICE

TARIFF SUBJECT INDEX

Subject	Section No.	Page No.	
High Capacity Service (a.k.a. BellSouth SPA High Capacity)	7.3.5(I)	7-69	
Metallic Service (a.k.a. BellSouth SPA Metallic)	7.3.5(A)	7-68	
Program Audio Service (a.k.a. BellSouth Program Audio)	7.3.5(D)	7-68	
Telegraph Grade Service (a.k.a. BellSouth SPA Telegraph)	7.3.5(B)	7-68	
Video Service (a.k.a. BellSouth SPA Video)	7.3.5(E)	7-68	
Voice Service (a.k.a. BellSouth SPA DSO VG)	7.3.5(C)	7-68	
Concurring Carriers		69	
Connecting Carriers		69	
Connections of Equipment and Systems	2.5	2-49.1	
Controller Arrangement	13.3.8	13-55	
Coordination of Telephone Company and Customer with Respect			
obligation of customers	2.3.9	2-12	
undertaking of telephone company	2.1.11	2-8	
Credit Allowance. See also Payment Arrangements			
alternative service	2.4.4(D)	2-35	
application of credit allowance	2.4.4(B)	2-30	
circumstances beyond telephone company control	2.1.3(H)	2-4	
definition	2.4.4(A)	2-29	
BellSouth direct access to directory assistance	9.3.2(D)	9-15	
BellSouth Directory Assistance Access	9.1.4(F)	9-9	
end user common line	4.5(D)	4-2	
error performance below specifications	2.4.4(B)(5)	2-32	
federal universal service	4.5(D)	4-2	(N)
interruptions for testing	2.3.4	2-10	
maintenance, rearrangements and implementation	2.4.4(C)(4)	2-34	
major fraction	2.6	2-64	
maximum allowance	2.4.4(B)(4)	2-32	
minimum allowance	2.4.4(C)(8)	2-35	
negligence of customer	2.4.4(C)(1)	2-34	
not applicable	2.4.4(C)	2-34	
program audio (a.k.a. BellSouth SPA Program Audio)/video service (a.k.a. BellSouth SPA Video)	2.4.4(B)(2)	2-31.1	
special access service (a.k.a. BellSouth SPA)	2.4.4(B)(1)	2-30	
special construction	2.4.4(C)(5)	2-34	
specialized service arrangements	2.4.4(B)(6)	2-33	

****

ACCESS SERVICE TARIFF SUBJECT INDEX

Subject	Section No.	Page No.	
BellSouth SWA	2.4.4(B)(3)	2-32	(T)
telephone company liability	2.1.3	2-2	
temporary discontinuance of service	2.1.3(B)	2-3	
temporary surrender of service	2.4.4(E)	2-35	
testing and/or repair	2.4.4(C)(6)	2-34	
Credit History of Customer	2.4.1(A)	2-21	
Criminal Actions Against Telephone Company	2.1.3(H)	2-4	
Customer(s), definition	2.6	2-55	
Customer Obligations			
BellSouth SWA 8XX Toll Free Dialing Ten Digit Screening Service	2.3.14	2-20	(T) (T)
availability for testing	2.3.4	2-10	
balance	2.3.5	2-10	
billing disputes involving jurisdictional reports	2.3.10(B)(4)	2-18	
carrier common line access service	3.4	3-2	
claims and demands for damages	2.3.8	2-11	
connecting facility assignment	5.22	5-3	
coordination with respect to network contingencies	2.3.9	2-12	
damages	2.3.1	2-9	
design of customer services	2.3.6	2-10	
determination of interstate and intrastate charges and PPSN packet usage	2.3.11	2-18	
BellSouth Direct Access to Directory Assistance	9.3.3	9-16	(T)
BellSouth Directory Assistance Service	9.1.3	9-7	(T)
equipment space and power	2.3.3	2-10	
jurisdictional report verification	2.3.10(B)	2-17	
mixed interstate and intrastate use and PPSN packet usage	2.3.11	2-18.4	
ownership of facilities and theft	2.3.2	2-10	
payment of rates, charges, and deposits	2.4.1	2-21	
references to the telephone company	2.3.7	2-11	
testing services for special access (a.k.a. BellSouth SPA) service	7.1.7	7-15	(T) (T)
BellSouth SWA	6.1.6	6-28	
Customer Designated Premises			
specification for Special Access (a.k.a. BellSouth SPA) services	7.2	7-17	(T) (T)
customer liability	2.3.1	2-9	
caused by other than telephone company equipment	2.2.1(A)	2-8	

****

ACCESS SERVICE TARIFF SUBJECT INDEX

Subject	Section No.	Page No.	
Dialed Number Identification via INWATS to DID	6.3.5(A)(1)	6-100	
Daily Rates, Special Access (a.k.a. BellSouth			(T)
SPA) Service description	7.4.1(B)	7-69	(T)
Data Over Voice Channel	7.2.8(D)(5)	7-47	
Data Transmission (107 Type) Test Line,			
definition	2.6	2-55.1	
dc Telegraph Signaling Systems			
customer responsibility for protection of			
facilities	2.1.9	2-7	
dc Telegraph Transmission, obligations of			
the customer	2.3.5	2-10	
Decibel, definition	2.6	2-55.1	
Decibel Reference Noise C-Message Referenced to 0,			
definition	2.6	2-55.1	
Decibel Reference Noise C-Message Weighting,			
definition	2.6	2-55.1	
Definitions	2.6	2-49.2	
Demands for Damages. See Claims for Damages.			
Deposits			
interest	2.4.1(A)	2-21	
refund	2.4.1(A)	2-21	
requirements	2.4.1(A)	2-21	
Derived Data Channel Service (DDCS) (a.k.a.			(T)
BellSouth Derived Data Channel)			(T)
description	7.2.12(A)	7-58	
channel interfaces	7.2.12(B)	7-58.1	
rate regulations	7.4.18(A)	7-103.2	
Design Change	5.3(C)(3)	5-13	
Design Change Charge for Engineering Review	5.3(C)(3)	5-13	
Design Layout Report			
BellSouth Directory Access Service	9.1.2(E)(5)	9-5	(T)
Special Access Service (a.k.a. BellSouth SPA)	7.1.6	7-15	(T)
BellSouth SWA Service	6.1.5	6-28	(T)
Design of Customer Services	2.3.6	2-10	

****

ACCESS SERVICE

TARIFF SUBJECT INDEX

Subject	Section No.	Page No.	
Detail Billing			
carrier common line	3.2.1	3-1	
definition	2.6	2-56	
end user access	4.2(B)	4-1	
Digital Data Access Service	7.2.8	7-43	
(a.k.a. BellSouth SPA DSO Digital Data)			(T)
basic channel, description	7.2.8(A)	7-43	
channel interfaces, description	7.2.8(C)	7-45	
optional features and functions, description	7.2.8(D)	7-45	
rates and charges	7.5.8	7-135	
technical specifications, description	7.2.8(B)	7-45	
BellSouth Direct Access to Directory	9.3	9-15	(T)
Assistance Service			
customer obligations	9.3.3	9-16	
definition	2.6	2-57	
description	9.3.1	9-15	
jurisdictional report verification	2.3.10	9-18	
rate regulations	9.3.4	9-18	
rates and charges	9.3.5	9-19	
telephone company undertaking	9.3.2	9-15	
BellSouth Directory Assistance Access Service			(T)
customer obligations	9.2.3	9-13	
definition	2.6	2-56	
description	9.1	9-1	
jurisdictional report verification	2.3.10(B)	2-17	
ordering options	5.2.6	5-8.1	
payment arrangements - minimum periods	9.1.4(A)	9-8	
rate regulations	9.1.5	9-11	
rates and charges	9.1.6	9-12	
telephone company undertaking	9.1.2	9-1	
Directory Assistance Location (Interstate)			
definition	2.6	2-56	
Directory Listings			
carrier common line	3.2.1	3-1	
end user access	4.2(C)	4-1	
Disasters. See also Emergency Conditions.			
network contingency plans - obligation of customer	2.3.9	2-12	
network contingency plans - undertaking of telephone company	2.1.11	2-8	
service reestablishment	2.4.5	2-35	
Discontinuance of Service.			
credit not applicable	2.2.1(B)	2-9	

****

ACCESS SERVICE TARIFF SUBJECT INDEX

Subject	Section No.	Page No.	
Discounted Access Minute Rates for Measured or Assumed Access Minutes.	6.7.8	6-142	
Disputed Amount Penalty			
General	2.4.1(B)(3)(c)	2-24	
Diversity			
description	11.1.(A)	11-1	
rates and charges	11.2.1	11-2	
Drop Wiring Provided by Telephone Company	2.1.5	2-5	
Dual Tone Multifrequency Address. Signaling,			
definition	2.6	2-56	
Duplex (DX) Signaling - Balance	2.3.5	2-10	
Echo Control			
definition	2.6	2-57	
Echo Path Loss			
definition	2.6	2-57	
Echo Return Loss			
definition	2.6	2-57	
Effective 4-Wire			
definition	2.6	2-58	
Electrical Power Provision	2.3.3	2-10	
BellSouth Electronic White Pages Access Service	9.2	9-12.1	
definition	2.6	2-58	
description	9.2.1	9-12.1	
jurisdictional report requirements	2.3.10	2-12	
rate regulations	9.2.4	9-14	
rates and charges	9.2.5	9-14	
general regulations	2.1.8(A)	2-6	
non-payment	2.1.8(A)	2-6	
prior to minimum period	2.4.2	2-28.3	(T)
temporary discontinuance for interference or impairment	2.2.1(B)	2-9	
Emergency Conditions, Special Federal Government Access Service	10.2	10-1	

All BellSouth marks contained herein and as set forth in the trademarks and servicemarks section of this Tariff are owned by BellSouth Intellectual Property Corporation.
****

ACCESS SERVICE TARIFF SUBJECT INDEX

Subject	Section No.	Page No.	
End Office			
definition	2.6	2-58	
specification for BellSouth SWA FGA	5.2.2(A)	5-4	(S)
specification for BellSouth SWA FGB	5.2.2(B)	5-4	(S)
End Office End User Line Service Screening for use with BellSouth SWA WATS			(S)
End User Common Line Access Service			
allowance for interruption	4.5(D)	4-2	
cancellation of orders	4.5(B)	4-2	
Centrex-CO	4.6(C)	4-3	
changes to orders	4.5(C)	4-2	
description	4.1	4-1	
lifeline assistance	4.6(L)	4-5	
limitations	4.2	4-1	
minimum period	4.5(A)	4-2	
multiline service-business	4.6(C)	4-3	
multiparty service	4.6(D)	4-4	
radio common carrier, maritime service	4.4(A)	4-1	
rate regulations	4.6	4-2	
rates	4.7	4-6	
remote call forwarding	4.6(B)	4-2	(D)(x)
telephone company undertaking	4.3	4-1	
temporary suspension of service	4.5(E)	4-2	
End User, definition	2.6	2-58	
Entrance Cable, provision	2.1.5	2-5	
Entry Switch. See First Point of Switching.			
Envelope Delay Distortion			
definition	2.6	2-59	
Equal Access. See BellSouth SWA FGD.			(S)
BellSouth Equal Access Subscription	13.3.3	13-7	(S)
Equal Access Transaction Services	13.3.11	13-69	
description	13.3.11(A)	13-69	
restrictions	13.3.11(B)	13-71	
ordering conditions	13.3.11(C)	13-72	
rates	13.3.11(E)	13-74	
Equal Level Echo Path Loss, definition	2.6	2-59	

(S) Originally filed under TN377 scheduled to become effective December 16, 1996.

(x) Issued under the authority of F.C.C. Report and Order FCC 96-388 In The Matter of Implementation of the Pay Telephone Reclassification and Compensation Provisions of the Telecommunications Act of 1996. CC Docket No. 96-128, released September 20, 1996, as modified in the RECONSIDERATION ORDER, FCC 96-439, released November 8, 1996.

****

ACCESS SERVICE TARIFF SUBJECT INDEX

Subject	Section No.	Page No.	
See also Balance Parameters.			
Equipment Space	2.3.3	2-10	
Exceptions to Access Service Offerings.	14	14-1	
Exchange, definition	2.6	2-59	
Exemption Certification, Special Access Surcharge	7.4.2(C)	7-76	
Expected Measured Loss, definition	2.6	2-59	
Explosive Atmospheres	2.1.3(F)	2-4	
BellSouth Virtual Expanded Interconnection Service			
assignment	20.1.4	20-4	(T)
conditions of occupancy	20.1.2	20-1	(T)
confidential information	20.1.11	20-10	(T)
description	20.1.1	20-1	(T)
force majeure	20.1.13	20-10	(T)
installation and maintenance	20.1.9	20-6	(T) (D)
interconnection space	20.1.10	20-8	(T)
liability and damages	20.1.10	20-6	(T)
rate regulations	20.1.14	20-11	(T)
rates and charges	20.4	20-16	(T)
rules of conduct	20.1.10	20-7	(T)
security arrangements	20.1.14	20-12	(T)
service application	20.1.4	20-4	(T)
service installation guarantee	2.4.9	2-49	
space preparation	20.1.10	20-8	(T)
title	20.1.12	20-10	(T)
Facility Hubs, Special Access (a.k.a. BellSouth SPA)	7.4.7	7-82	
Facility Terminations	2.1.5	2-5	
Faster Signaling on DID	6.3.3(A)(10)	6-91	
Feature Group A (FGA)- BellSouth SWA FGA	6.1.1(A)	6-2	
assumed average access minutes	3.8.3	3-15	
description	6.2.1(A)	6-30	
interface groups	6.1.3(A)(5)	6-11.4	
jurisdictional report verification	2.3.10(B)	2-17	
local switching	6.1.3(B)	6-26	
manner of provision	6.1.1(I)	6-6	
message unit credit	6.7.11	6-150	
mileage measurement	6.7.13	6-151	
minimum monthly charge	6.7.4	6-138	
moves	6.7.7	6-141	
optional features	6.2.1(B)	6-33	

All BellSouth marks contained herein and as set forth in the trademarks and servicemarks section of this Tariff are owned by BellSouth Intellectual Property Corporation.
****

ACCESS SERVICE TARIFF SUBJECT INDEX

Subject	Section No.	Page No.	
ordering	6.1.7	6-28.1	
rates and charges	6.8	6-157.1	
rate categories	6.1.3	6-8	
rate regulations	6.7	6-125	
testing capabilities	6.2.1(D)	6-35	
transmission specifications	6.2.1(C)	6-34.1	
transport termination optional feature	6.2.1(B)(3)	6-34	
Feature Group B (FGB)- BellSouth SWA FGB	6.2.2	6-35	(T)
common switching optional features	6.2.2(B)(1)	6-38	
description	6.2.2(A)	6-35	
design and traffic routing	6.5.2	6-118	
determination of number of transmission paths	6.5.5	6-119	
interface groups	6.1.3(A)(5)	6-11.4	
jurisdictional report verification	2.3.10(B)	2-17	
local switching	6.1.3(B)	6-26	
manner of provision	6.1.1(I)	6-6	
measuring access minutes	6.7.8	6-142	
mileage measurement	6.7.13	6-151	
minimum monthly charge	6.7.4	6-138	
moves	6.7.7	6-141	
optional features	6.2.2(B)	6-38	
ordering	6.1.7	6-28.1	
rates and charges	6.8	6-157.1	
rate categories	6.1.3	6-8	
rate regulations	6.7	6-125	
testing capabilities	6.2.2(D)	6-39	
transmission specifications	6.2.2(C)	6-38	
transport termination optional feature	6.2.2(B)(3)	6-38	
Feature Group C (FGC) - BellSouth SWA FGC	6.2.3(A)	6-39	
BellSouth SWA 500 Service	6.1.1(E)	6-4	(T)
BellSouth SWA 8XX Toll Free Dialing Ten Digit Screening Service	6.1.1(F))	6-4	(T)
BellSouth SWA 900 Service	6.1.1(G)	6-4	(T)
access minutes - recorded by IC	3.5.2	3-3	

****

ACCESS SERVICE TARIFF SUBJECT INDEX

Subject	Section No.	Page No.	
common switching optional features	6.2.3(B)(1)	6-42	
description	6.2.3(A)	6-39	
design blocking probability	6.5.7	6-120	
design and traffic routing	6.5.2	6-118	
interface groups	6.1.3(A)(5)	6-114	
local switching	6.1.3(B)	6-26	
manner of provision	6.1.1(I)	6-6	
measuring access minutes	6.7.8	6-142	
mileage measurement	6.7.13	6-151	
minimum monthly charge	6.7.4	6-138	
moves	6.7.7	6-141	
optional features	6.2.3(B)	6-42	
ordering	6.1.7	6-28.1	
rates and charges	6.8	6-157.1	
rate categories	6.1.3	6-8	
rate regulations	6.7	6-125	
testing capabilities	6.2.3(D)	6-44	
transmission specifications	6.2.3(C)	6-43	
transport termination optional feature	6.2.3(B)(3)	6-43	
Feature Group D (FGD)- BellSouth SWA FGD	6.2.4	6-44	(T)
carrier common line - prorate for resale	3.6.4	3-5	
common switching optional features	6.2.4(B)(1)	6-49	
BellSouth SWA 500	6.1.1(E)	6-4	(T)
BellSouth SWA 8XX Toll Free Dialing Ten Digit Screening Service	6.1.1(F)	6-4	(T)
BellSouth SWA 900	6.1.1(G)	6-4	(T)
description	6.2.4(A)	6-44	
design blocking probability	6.5.7	6-120	
determination of number of transmission paths	6.5.5	6-119	
interface groups	6.1.3(A)(5)	6-11.4	
jurisdictional report verification	2.3.10(B)	2-17	
local switching	6.8.2	6-161	
manner of provision	6.1.1(I)	6-6	
measuring access minutes	6.7.8	6-142	

****

ACCESS SERVICE TARIFF SUBJECT INDEX

Subject	Section No.	Page No.	
mileage measurement	6.7.13	6-151	
minimum monthly charge	6.7.4	6-138	
moves	6.7.7	6-141	
network blocking charge	6.7.9	6-148	
ordering	6.1.7	28.1	
premium rates	6.7.1(E)	6-132	
rates and charges	6.8	6-157.1	
rate categories	6.1.3	6-8	
Federal Government			
regulations	10.5	10-2	
service offerings	10.6	10-3	
Federal Universal Service Charge			(N)
allowance for interruption	4.5(D)	4-2	(N)
lifeline assistance	4.6(O)	4-6	(N)
rate regulations	4.6(O)	4-6	(N)
rates	4.7(E)	4-9	(N)
remote call forwarding	4.6(B)	4-2	(N)
temporary suspension of service	4.5(E)	4-2	(N)
Fire. See Disaster.			
First-Come First-Served	2.6	2-60	
First Point of Switching			
definition	2.6	2-60	
FlexServ Service (a.k.a. BellSouth SPA Customer Reconfiguration)			
customer circuits	7.4.12(A)(3)	7.90	
management terminal interface	7.4.12(A)(1)	7-88.1	
rate regulations	7.4.12	7-88	
rates and charges	7.5.18	7-156.5	
security card	7.4.12(A)(1)	7-88.1	
Flood. See Disaster.			
Frequency Shift			
definition	2.6	2-60	
General Regulations, Access Service			
connections	2.5	2-49.1	
customer obligations	2.3	2-9	
definitions	2.6	2-49.2	
payment arrangements and credit allowances	2.4	2-21	

****

ACCESS SERVICE TARIFF SUBJECT INDEX

Subject	Section No.	Page No.	
telephone company undertaking	2.1	2-1	
use	2.2	2-8	
Grandfathered, definition	2.6	2-60	
Hazards - Interference or Impairment	2.2.1	2-8	
High Capacity Service (a.k.a. BellSouth	7.2.9	7-49	(T)
SPA High Capacity)			(T)
basic channel, description	7.2.9(A)	7-49	
channel interfaces, description	7.2.9(C)	7-50	
optional features and functions, description	7.2.9(E)	7-51	
rates and charges	7.5.9	7-145	
technical specifications, description	7.2.9(B)	7-50	
Holidays			
affecting due dates of bills	2.4.1(B)(3)(a)	2-23	
Host Office, definition	2.6	2-60	
Hubs			
definition	2.6	2-61	
Hunt group arrangement			
optional feature with Special Access			
(a.k.a. BellSouth SPA)/WATS (a.k.a. BellSouth			(T)
SPA WATS Line) or BellSouth SWA WATS-Type	7.5.3.1(C)	7-119	(T)

****

ACCESS SERVICE TARIFF SUBJECT INDEX

Subject	Section No.	Page No.	
Immediately Available Funds	2.6	2-61	
Impairment. See Interference or Impairment.			
Impedance Balance	2.6	2-61	
Impedance, Special Access (a.k.a. BellSouth SPA) Service	7.3.2	7-66	
Impulse Noise			
definition	2.6	2-61	
Individual Case Basis			
additional engineering-miscellaneous service	13.3.4	13-20	
definition	2.6	2-61	
special access service	7.6	7-157	
special facilities routing	11.3	11-3	
Inserted Connection Loss			
definition	2.6	2-61	
Intercept arrangements			
common line access	3.2.1	3-1	
end user access	4.2(D)	4-1	
Interconnection Arrangements between Exchange Telephone Companies	2.4.7	2-36	
Interexchange Common Carrier			
definition	2.6	2-62	
Interface Codes. See Premises Interface Codes.			
Interference or Impairment	2.2.1	2-8	
Intermodulation Distortion			
definition	2.6	2-62	
Interruptions to Service. (See Credit Allowance)			
Interstate Communications, definition	2.6	2-62	
Interstate Minutes of Use. See Access Minutes.			
Intrabuilding Cable	2.1.5	2-5	
Intra-Office Collocation Cross Connect Service	13.3.22	13-76.14	(N)
Rates and Charges		13-76.15	(N)
Intrastate Communications			
definition	2.6	2-62	
Inward Operator Services - BellSouth Inward	18.2	18-3	
IPTG Terminating Service – (a.k.a. BellSouth IPTG Terminating Service)	6.1.1(K)	6-7	

All BellSouth marks contained herein and as set forth in the trademarks and servicemarks section of this Tariff are owned by BellSouth Intellectual Property Corporation.
****

ACCESS SERVICE TARIFF SUBJECT INDEX

Subject	Section No.	Page No.	
Issuing Carriers		69	
Jacks, Standard - registration program - charges	13.3.4	13-18	
Jurisdictional Report Requirements			
billing disputes	2.3.10(B)	2-17	
for multiline hunt or trunk group arrangements, determination of charges	2.3.10(A)(3)	2-14	
determination of interstate charges for mixed BellSouth Directory Assistance Access Service	2.3.10(A)(5)	2-16	(T)
interstate and intrastate use	2.3.11	2-18.4	
Failure to provide data	2.3.10(B)(1)	2-17	
determination of jurisdiction of mixed interstate and intrastate Special Access service (a.k.a. BellSouth SPA)	2.3.12	2-19	(T)
Feature Group A - BellSouth SWA FGA and B -			(T)
BellSouth SWA FGB	2.3.10(A)(2)	2-14	(T)
Feature Group C - BellSouth SWA FGC and D -			(T)
BellSouth SWA FGD	2.3.10(A)(4)	2-5	(T)
revised report	2.3.10(A)(6)	2-16	(T)
Labor Difficulties	2.1.3(H)	2-4	
Late Payment Penalty	2.4.1(B)(3)(b)	2-23	
Liability of Telephone Company	2.1.3	2-2	
Libel. See Claims for Damages.			
Lifeline Assistance	4.6(L)	4-5	
LightGate service (a.k.a. BellSouth SPA Point to	7.4.9	7-86.1	(T)
Point Network)			(T)
Line Side Basic Serving Arrangement (LSBSA) -	6.2.7	6-57	
BellSouth SWA LSBSA			(T)
assumed average access minutes	3.8.3	3-15	
description	6.2.7(A)	6-57	
interface groups	6.1.3(A)(5)	6-11.4	
jurisdictional report verification	2.3.10(B)	2-17	
local switching	6.1.3(B)	6-26	
manner of provision	6.1.1(I)	6-6	
message unit credit	6.7.11	6-150	
mileage measurement	6.7.13	6-152	
minimum monthly charge	6.7.4	6-138	

****

ACCESS SERVICE TARIFF SUBJECT INDEX

Subject	Section No.	Page No.	
Line Side Basic Serving Arrangement (LSBSA)- BellSouth SWA LSBSA (Cont'd)			(T)
moves	6.7.7	6-141	
optional features	6.2.7(B)	6-59	
ordering	6.1.7	6-28	
rates and charges	6.8	6-157.1	
rate categories	6.1.3	6-8	
rate regulations	6.7	6-125	
testing capabilities	6.2.7(D)	6-62	
transmission specifications	6.2.7(C)	6-62	
transport termination optional features	6.2.7(B)(5)	6-60	
Line Side Connection			
See also BellSouth SWA FGA			(T)
Service definition	2.6	2-63	
Local Access and Transport Area			
Line Side Connection.			
See also BellSouth SWA FGA Service.			(T)
definition	2.6	2-63	
Local Access and Transport Area			
definition	2.6	2-63	

****

ACCESS SERVICE TARIFF SUBJECT INDEX

Subject	Section No.	Page No.	
Local Tandem Switch			
definition.	2.6	2-63	
Location Provider			
definition	2.6	2-63	
Loss Deviation			
definition	2.6	2-64	
Make Busy Key	6.3.3(A)(9)	6-91	
Managed Shared Frame Relay Service (MSFRS)	21.4	21-28	
Managed Shared ATM Service (MSATMS)	21.4	21-45	
Managed Shared Network Service (BellSouth SPA)	7.2.16	7-58.10	
rate regulations	7.4.27	7-103.18	
rates and charges	7.5.20	7-156.14	
Maintenance Characteristics	2.3.6	2-10	
obligations of the customer	2.1.6	2-5	
Maintenance of services	13.3.1	13-5	
Mechanized Interface to			
Specified Operation Support Systems	5.2.15	5-11.0.1	
Meetpoint Billing	2.4.7	2-36	
Message			
definition	2.6	2-64	
Message Desk (SMDI)	6.3.3(A)(4)	6-88	
Message Station Equipment Recovery Charge, rate	7.5.10	7-151	
Messages, transmission of	2.1.1(A)	2-1	
Metallic (a.k.a. BellSouth SPA Metallic) Facilities			
limitation of use	2.1.9	2-7	
substitution	2.1.7	2-5	
Metallic (a.k.a. BellSouth SPA Metallic) Service	7.2.1	7-19	
Metropolitan Statistical Area Access Services	23	23-1	(N)

****

ACCESS SERVICE TARIFF SUBJECT INDEX

Subject	Section No.	Page No.	
channel interfaces, description	7.2.1(C)	7-20	
optional features and functions, description	7.2.1(D)	7-20	
rates and charges	7.5.1	7-104	
technical specifications, description	7.2.1(B)	7-19	
Mileage. See also BellSouth Directory Assistance Access Service; Special Access (a.k.a. BellSouth SPA) Service; BellSouth SWA Service; service provided by more than one telephone company; service offerings to the federal government			
Mileage Measurement			
special access (a.k.a. BellSouth SPA) service	7.4.6	7-80	
Milliwatt (102 Type) Test Line			
definition	2.6	2-64	
Minimum Period			
general	2.4.2	2-28.3	(T)
part-time video and program audio special access services	7.4.4	7-79	
special access service	7.4.4	7-79	
Minimum Period Charges			
special access	7.4.4	7-79	
Minimum Protection Criteria	2.1.7	2-5	
customer responsibility for redesign	2.3.6	2-10	
Minutes of Use. See Access Minutes.			
Miscellaneous Services	13.3	13-5	
Misconduct, Telephone Company Liability	2.1.3(A)	2-2	
determination of interstate charges	2.3.11	2-18.4	
Moves			
special access (a.k.a. BellSouth SPA) service	7.4.5	7-79	
Multiline Business Subscribers	4.6	4-2	
Multiline Hunt Group	6.3.3(A)(1)	6-87.2	
Individual Access to each group in Hunt Group	6.3.3(A)(3)	6-88	
UCD with Queuing	6.3.3(A)(7)	6-89	
Multiparty Rate for End User Common Line (EUCL)	4.7(C)	4-6	
Multipoint Special Access (a.k.a. BellSouth SPA) Services, Special Access (a.k.a. BellSouth SPA) Surcharge	7.4.2	7-75	

All BellSouth marks contained herein and as set forth in the trademarks and servicemarks section of this Tariff are owned by BellSouth Intellectual Property Corporation.
****

ACCESS SERVICE TARIFF SUBJECT INDEX

Subject	Section No.	Page No.	
Network Channel Codes and Channel Interfaces,			
Special Access	7.3	7-58	
Network Channel Interface (NCI) Code Update,			
definition	2.6	2-65	
obligations of the customer	2.3.9	2-12	
undertaking of the telephone company	2.1.11	2-8	
Network Configuration			
Digital Data Access (a.k.a. BellSouth SPA DSO Digital Data) Service	7.2.8(D)(4)	7-47	
High Capacity (a.k.a. BellSouth SPA High Capacity) Service	7.2.9(E)(4)	7-54	
Voice Grade (a.k.a. BellSouth SPA DSO VG) Service	7.2.3(D)(12)	7-30	
Network Control Signaling, definition	2.6	2-65	
Network Management	6.5.1	6-117	
Network Optimization Waiver	7.4.20	7-103.6	
BellSouth Network Visibility Service	21.6	21-64	(N)
Non-payment; Non-complying Customer	2.1.8	2-6	
Nonpremium Access for Carrier Common Line Access			
Service	3.1	3-1	
Nonrecurring charges			
special access (a.k.a. BellSouth SPA service)	7.4.1(C)	7-70	
BellSouth SWA service	6.7.1(D)	6-126	
Nonsynchronous Test line, definition	2.6	2-65	
changes in telephone numbers	2.1.12	2-8	
Notification to the Customer by Telephone Company			
changes and substitutions	2.1.7	2-5	
interference or impairment	2.2.1	2-8	
refusal and discontinuance of service	2.1.8(A)	2-6	
service-affecting activities	2.1.10	2-7	
temporary discontinuance of service	2.2.1(B)	2-9	

****

ACCESS SERVICE TARIFF SUBJECT INDEX

Subject	Section No.	Page No.
Obligations of the customer	6.6	6-123
Off-hook		
definition	2.6	2-65
supervision with carrier common line access service	3.4.2	3-3
On-hook		
supervision with carrier common line access service	3.4.2	3-3
Open Circuit Test Line, definition	2.6	2-66
Operating Characteristics		
interference or impairment	2.2.1	2-8
obligations of the customer	2.3.6	2-10
undertaking of telephone company	2.1	2-1
Operation of Services		
changes	2.1.7	2-5
telephone company undertaking	2.1.1	2-1
Optional Features and Functions, Special Access Service		
description	7.1.2(D)	7-5
installation	7.1.2(D)	7-5
Optional Payment Plans	2.4.8	2-44.2
Channel Services Payment Plan	2.4.8(A)	2-44.2
Optional Priority Installation and Repair Service		
Additional Labor	13.2	13-2
Expedited Service Order	5.3(C)(4)	5-14
Ordering Options and Conditions, Special Access (a.k.a. BellSouth SPA) Service	7.1.8	7-16
BellSouth SWA 500 Service	5.2.15	5.11.1
BellSouth SWA 8XX Toll Free Dialing Ten Digit Screening Service	5.2.4	5-7
BellSouth SWA 900 Service	5.2.9	5-10
Ordering Options for BellSouth SWA and Special Access (a.k.a. BellSouth SPA) Service		
access order	5.1	5-1
additional engineering	5.1.2(C)	5-2.1
additional labor	5.1.2(A)	5-2
additions to orders	5.3	5-11
available inventory	5.8	5-23.2
cancellation	5.4	5-15
design change charge	5.3(C)(3)	5-13
directory assistance service	5.2.6	5-8.1

(D)

****

ACCESS SERVICE TARIFF SUBJECT INDEX

Subject	Section No.	Page No.	
Feature Group A - BellSouth SWA FGA	5.2.2(A)	5-4	(T)
Feature Group B - BellSouth SWA FGB	5.2.2(B)	5-4	(T)
Feature Group C - BellSouth SWA FGC	5.2.2(C)	5-5	(T)
Feature Group D - BellSouth SWA FGD	5.2.2(D)	5-5	(T)
BellSouth SWA 8XX Toll Free Dialing Ten Digit Screening Service	5.2.4	5-7	(T)
BellSouth SWA 8XX Toll Free Dialing Number Administration Service	5.2.4.(A)	5-8	(T) (T)
general	5.1	5-1	
minimum period	5.6	5-21	
shared use facilities	5.7	5-23	
modifications	5.3(A)	5-11	
negotiated intervals	5.1.1	5-1	
non-recoverable costs	5.4(B)(4)	5-16	
order for discontinuance of service	5.4(D)	5-20	
ordering conditions	5.1.1	5-1	
partial cancellation charge	5.3(C)(2)	5-12	
provision of other services	5.1.2	5-2	
restoration priority	13.3.2	13-6	
selection of facilities	5.5	5-20	
service date change charge	5.3(C)(1)	5-11.2	
special access service	5.2.7	5-9	
special construction	5.1.3	5-3	
special facilities routing	5.1.2(A)	5-2	
standard intervals	5.1.1	5-1	
testing service	5.1.2(A)	5-2	
Originating BHMCs. See Busy Hour Minutes of Capacity.			
Originating Direction, definition	2.6	2-66	
Other Participating Carriers	-	69	
Other Tariffs, Purchase of	-	72	
Ownership of Facilities	2.3.2	2-10	
Ownership Rights	2.4.6	2-36	
telephone numbers	2.1.12	2-8	

****

ACCESS SERVICE TARIFF SUBJECT INDEX

Subject	Section No.	Page No.	
Packet Switch	7.5.8(G)	7-142	
Packet Switching Options			
CUG, Hunt Group, Call Redirection, Direct Call, Fast Select	7.2.8(D)(3)	7-46	
Participating Carriers	-	69	
Patent Infringement. See Claims for Damages.			(D)(x)
			(D)(x)
			(D)(x)
			(D)(x)
			(D)(x)
			(D)(x)
			(D)(x)
			(D)(x)
			(D)(x)
			(D)(x)
			(D)(x)
			(D)(x)
			(D)(x)
			(D)(x)
			(D)(x)
			(D)(x)
			(D)(x)
Payment Arrangements. See also Credit Allowance;			
adjustments	2.4.4	2-29	
bill day	2.4.1(B)	2-21	
billing disputes	2.4.1(B)(3)(c)	2-24	
carrier common line	2.4.1(B)(2)	2-22	
deposits	2.4.1(A)	2-21	
end user access charge - bill date	2.4.1(B)(1)	2-22	
federal government	2.4.1(B)(1)	2-22	

(x) Issued under the authority of F.C.C. Report and Order FCC 96-388 In The Matter of Implementation of the Pay Telephone Reclassification and Compensation Provisions of the Telecommunications Act of 1996. CC Docket No. 96-128, released September 20, 1996, as modified in the RECONSIDERATION ORDER, FCC 96-439, released November 8, 1996.

****

ACCESS SERVICE TARIFF SUBJECT INDEX

Subject	Section No.	Page No.	
general regulations	2.	2-1	
holidays, Saturday or Sunday payment date	2.4.1(B)(3)(a)	2-23	
interest rate for late payment penalty	2.4.1(B)(3)(b)	2-23	
late factor	2.4.1(B)(3)(b)	2-23	
late payment penalty	2.4.1(B)(3)(b)	2-23	
minimum periods	2.4.2	2-28.3	
partial payment	2.4.1(B)(3)(b)	2-23	
payment date	2.4.1(B)(3)(a)	2-23	
presubscription bill date	2.4.1(B)(1)	2-22	
prorate for establishment/discontinuance of service	2.4.1(C)	2-25	
rounding of rates of more than two decimal places	2.4.1(D)	2-25	
unbilled adjustments	2.4.1(B)	2-21	
Payment Date			
general regulations	2.4.1(B)	2-21	
PEC/SEC Billing			
alternate billing schedule	2.4.1(B)(2)	2-22	
Phase Jitter			
definition	2.6	2-67	
Physical Access Cross Connect Service	13.3.23	13-76.16	(N)
Rates and Charges	13.3.23	13-76.17	(N)
Point of Termination, definition	2.6	2-67	
Political Unrest. See Emergency Conditions.			
Premises, definition	2.6	2-67	
Premises Interface Code			
BellSouth Directory Assistance Access Service	9.1.2(E)(2)	9-3	
BellSouth SWA	6.1.3(A)(5)(g)	6-18.1	
AccuPulse	6.1.3(A)(5)(h)	6-22	
BellSouth SWA CCSAC	6.1.3(A)(5)(i)	6-22	
Premium Access			
access groups-equal access offices only	3.6.4(E)	3-8	
carrier common line access service	3.1	3-1	
Presidential Service. See Emergency Conditions.			
Primary/Secondary Exchange Carrier Billing Arrangements See PEC/SEC Billing.			

All BellSouth marks contained herein and as set forth in the trademarks and servicemarks section of this Tariff are owned by BellSouth Intellectual Property Corporation.
****

ACCESS SERVICE TARIFF SUBJECT INDEX

Subject	Section No.	Page No.
Privacy		
impairment by other than telephone company equipment	2.2.1	2-8
invasion of	2.1.3(D)(1)	2-3
Private Line Conditioning	7.2.3(D)(2)	7-23
Private Line Service, Resale	3.5.3	3-3
Program Audio Service (a.k.a. BellSouth SPA Program Audio)	7.2.4	7-34
basic channel, description	7.2.4(A)	7-34
channel interfaces, description	7.2.4(C)	7-35
optional features and functions	7.2.4(D)	7-36
rates and charges	7.5.4	7-121
technical specifications, description	7.2.4(B)	7-35
Prorated Charges Due to Adjustments	2.4.1(C)	2-25
Protection Criteria. See Minimum Protection Criteria.		
Protective Connecting Arrangements	13.3.7	13-48
Provision of Services, General	2.1.4	2-4
Rate Categories,		
Special Access (a.k.a. BellSouth SPA) service	7.1.2	7-4
BellSouth SWA service	6.1.3	6-8
Rate Regulations		
Special Access (a.k.a. BellSouth SPA) service	7.4	7-69 (T)1
BellSouth SWA service	6.7	6-125
Rates, Charges, and Deposits, Payment of. see Payment Arrangements; Credit Allowances.		
Access Service Provided By More Than One Telephone Company	2.4.7	2-36

****

ACCESS SERVICE TARIFF SUBJECT INDEX

Subject	Section No.	Page No.	
Reference to Other Tariffs	-	72	
Reference to Other Publications	-	72	
Refusal and Discontinuance of Service	2.1.8	2-6	
Registered Equipment, definition	2.6	2-68	
Registered Service Marks	-	69	
Registered Trademarks	-	69	
Remote Access Server, definition	2.6	2-68	
Remote Call Forwarding			
application of end user access charges	4.6(B)	4-2	
Remote Switching Modules, definition	2.6	2-68	
Remote Switching Systems, definition	2.6	2-68	
Resale of MTS and/or MTS-type Service			
Carrier Common Line Access	3.6.4	3-5	
Resale of Private Line Service	3.5.3	3-3	
Restoration Priority	13.3.2	13-6	
Return Loss, definition	2.6	2-68	
Route Diversity	11.1	11-1	
Rounding of Rates	2.4.1(D)	2-25	
Secondary Channel			
capability	7.2.8(A)	7-44	
definition	2.6	2-68	
Secondary Exchange Carrier Billing Arrangements. See PEC/SEC Billing.			
Security Card	13.3.12	13-74.1	
Service Configurations			
Special Access (a.k.a. BellSouth SPA) service	7.1.3	7-8.2.1	(T)

****

ACCESS SERVICE TARIFF SUBJECT INDEX

Subject	Section No.	Page No.	
Service Descriptions			
Special Access (a.k.a. BellSouth SPA) service	7.2	7-17	(S)
Service Installation Guarantee	2.4.9	2-49.0.3	
Service Interruptions. See Credit Allowance			
Service Rearrangements,			
Special Access service	7.4.1(C)(3)	7-71.1	
Service Reestablishment Following Disaster	2.4.5	2-35	
Services,			
assignment or transfer	2.1.2(A)	2-1	
guarantee. See Service Installation Guarantee			
installation and termination	2.1.5	2-5	
maintenance	2.1.6	2-5	
operation. See Operation of Services.			
provision	2.1.4	2-4	
refusal and discontinuance	2.1.8	2-6	
restoration	2.1.2(B)	2-2	
transfer or assignment	2.1.2(A)	2-1	
scope	2.1.1	2-1	
warranty. See Warranty of Services.			
Serving Wire Center, definition	2.6	2-69	
Seven Digit Manual Test Line, definition	2.6	2-69	
Short Circuit Test Line, definition	2.6	2-69	
Shortage of Facilities or Equipment	2.1.2(C)	2-2	
			(D)(x)
Singing Return Loss			
definition	2.6	2-70	
Slander. See Claims for Damages.			
SMARTPath services (a.k.a. BellSouth SPA DS1			(S)
Shared Ring and BellSouth SPA DS3 Shared Ring)			(S)
credit allowance	2.4.4(B)	2-31	
rate categories	7.1.2(E)	7-8.1.1	
service description			
BellSouth SPA DS1 Shared Ring	7.2.13	7-58.2	
BellSouth SPA DS3 Shared Ring	7.2.14	7-58.3	
rate regulations	7.4.19	7-103.5	
rates and charges	7.5.16	7-156.3	
SMARTRing service (a.k.a. BellSouth SPA			(S)
Dedicated Ring)			(S)
credit allowance	2.4.4(B)(8)	2-33	
rate categories	7.1.2(D)	7-6.1	
service configurations	7.1.3(D)	7-13	
service descriptions	7.2.11	7-56	
rate regulations	7.4.14	7-100	
rates and charges	7.5.14	7-152.1	

(S) Originally filed under TN377 scheduled to become effective December 16, 1996.

(x) Issued under the authority of F.C.C. Report and Order FCC 96-388 In The Matter of Implementation of the Pay Telephone Reclassification and Compensation Provisions of the Telecommunications Act of 1996. CC Docket No. 96-128, released September 20, 1996, as modified in the RECONSIDERATION ORDER, FCC 96-439, released November 8, 1996.

****

ACCESS SERVICE TARIFF SUBJECT INDEX

Subject	Section No.	Page No.	
Special Access (a.k.a. BellSouth SPA) Service.			(T)
See also Metallic (a.k.a. BellSouth SPA Metallic)			(T)
Service; Digital Data (a.k.a. BellSouth SPA DSO			(T)
Digital Data) Service; High Capacity			(T)
(a.k.a. BellSouth SPA High Capacity) Service;			(T)
Program Audio (a.k.a. BellSouth SPA Program Audio)			(T)
Service; Telegraph Grade (a.k.a. BellSouth SPA			(T)
Telegraph) service; Video (a.k.a.			(T)
BellSouth SPA Video) Service; Voice Grade (a.k.a.			(T)
BellSouth SPA DSO VG) service; Central Office			(T)
Bridging; Central Office Channelization:			
Compatible Channel Interface Codes.	7.	7-1	
acceptance testing, description	7.1.7	7-15	
alternate use, description	7.1.4	7-15	
automatic loop transfer	7.2.9(E)(1)	7-51	
channel interface codes	7.3	7-58.3	
channel mileage rate element, description	7.1.2	7-4	
channel types, description	7.1.1	7-1	
conditioning, voice grade service	7.2.3(D)(2)	7-23	
customer specified premises receive level			
voice grade (a.k.a. BellSouth			(T)
SPA DSO VG) service	7.2.3(D)(3)	7-26	(T)
daily rates, description	7.4.1(B)	7-69	
design layout report, description	7.1.6	7-15	
digital hierarchy level	7.3.3	7-66	
gain conditioning, program audio service	7.2.4(D)(2)	7-36	
general	7.1	7-1	
glossary of channel interface codes and			
options	7.3.1	7-59	
hub, definition	7.1.2(D)	7-6	
impedance	7.3.2	7-66	
improved return loss, voice grade service	7.2.3(D)(4)(a)	7-26	
individual case basis	7.6	7-157	
installation charges	7.4.1(C)(1)	7-70.1	
interoffice channel, description	7.1.2(B)	7-4	
local channel, description	7.1.2(A)	7-4	
mileage measurement	7.4.6	7-80	
minimum period	7.4.4	7-79	
monthly rates, description	7.4.1(A)	7-69	
moves	7.4.5	7-79	
multipoint service, description	7.1.3(C)	7-10	
network channel codes and channel interfaces	7.3	7-58	
nonrecurring charges, description	7.4.1(C)	7-70	
optional features and functions	7.1.2(D)	7-5	
description	7.4.1(C)(2)	7-71	
installation charge	7.4.1(C)(2)	7-71	
ordering options and conditions	7.1.8	7-16	
rate categories 7.1.27-4			

****

ACCESS SERVICE TARIFF SUBJECT INDEX

Subject	Section No.	Page No.	
rate regulations	7.4	7-69	
service configurations, description	7.1.3	7-8.2.1	(T)
service descriptions	7.2	7-17	
service rearrangements	7.4.1(C)(3)	7-71.1	
shared use analog and digital high capacity services	7.4.8	7-8.3	
signaling capability, voice grade (a.k.a. BellSouth SPA DSO VG service)	7.2.3(D)(7)	7-28	
special facilities routing, description	7.1.5	7-15	
stereo, program audio (a.k.a. BellSouth SPA Program Audio) service	7.2.4(D)(3)	7-36	
telegraph bridging	7.2.2(D)(1)	7-21	
telephoto conditioning, voice grade (a.k.a. BellSouth SPA DSO VG) service	7.2.3(D)(6)	7-28	
two-point service, description	7.1.3(B)	7-8.4	
voice grade (a.k.a. BellSouth SPA DSO VG) service	7.2.2	7-21	
Special Access (a.k.a. BellSouth SPA) Service Surcharge			
exemptions	7.4.2(B)	7-75	
rate	7.5.11	7-152	
Special Construction, BellSouth SWA and Special Access (a.k.a. BellSouth SPA) Service customer fails to authorize replacement	2.4.4(C)(5)	2-34	
Special facilities routing	6.1.4	6-28	
Special Federal Government Access Services See Federal Government.			
Specialized Service or Arrangements			
general	12.1	12-1	
rates and charges	12.3	12-2	
Subtending End Office of an Access Tandem, definition	2.6	2-70	
Suits. See Claims for Damages.			
Surrender of Service, Temporary	2.4.4(E)	2-35	
Surrogate Client Numbers	6.3.3(A)(5)	6-88	
BellSouth SWA Service. See also, BellSouth SWA FGA; BellSouth SWA FGB; BellSouth SWA FGC; BellSouth SWA FGD; BellSouth SWA LSBSA; BellSouth SWA TSBSA	6	6-1	

****

ACCESS SERVICE TARIFF SUBJECT INDEX

Subject	Section No.	Page No.	
BellSouth Directory Assistance Access Service; Carrier Common Line Access Service; End User Access Service; Busy Hour Minutes of Capacity; Access Order;			(T)
acceptance testing, description	6.1.6	6-28	
central office channel interface			
description	6.1.3(A)(7)	6.25.5	
charges/USOCs	6.8.1(G)	6-159.1	
customer specified entry switch			
receive level	6.1.3.(A)(6)(b)	6-24	
design layout report	6.1.5	6.28	
facility hubs	6.7.17	6-155.1	
general	6.1	6-1	
information surcharge	6.7.15	6-155.1	
installation charges	6.8.1	6-157.1	
interconnection			
definition	2.6	2-62	
description	6.1.3	6-11.4	
charges	6.8.1	6-157.2	
interoffice channel mileage rate			
description	6.1.3(A)	6.11.2	
mileage measurement	6.7.13	6-151	
mileage measurement to/from hub	6.7.13	6-154	
minimum period	6.7.2	6-138	
monthly rates, description	6.7.1(A)	6-125	
moves	6.7.7	6-141	
network channel interface codes	6.7.1(D)	6-130	
nonrecurring charges, description	6.7.1(D)	6-126	
optional features & functions			
description	6.1.3	6-23	
installation description	6.7.1(D)	6-130.1	
installation charges	6.8.1	6-158	
ordering options & conditions	6.1.7	6-28	
rate categories	6.1.3	6-8	
rate regulations	6.7	6-125	
service descriptions	6.1	6-1	
service arrangements	6.1.1.	6-1	

****

ACCESS SERVICE

TARIFF SUBJECT INDEX

Subject	Section No.	Page No.	
shared use	6.7.14	6-154	
common and dedicated	6.7.18	6-156.1	
signaling capability	6.1.3(A)	6-25	
special facilities routing	6.1.4	6-28	
BellSouth SWA dedicated transport			(T)
description	6.1.3	6-11.2	
charges	6.9.1(B)	6-158	
BellSouth SWA common transport			(T)
description	6.1.3	6-11.2	
charges	6.8.1(B)	6-158	
Synchronous Test Line, definition	2.6	2-70.1	
BellSouth Telecommunications Relay Service			(T)
Transport	16	16-1	
BellSouth SPA Telegraph Service	7.2.2	7-20	(T)
basic channel, description	7.2.2(A)	7-20	
channel interfaces, description	7.2.2(C)	7-21	
optional features and functions, description	7.2.2(D)	7-21	
rates and charges	7.5.2	7-106	
technical specifications, description	7.2.2(B)	7-20	
Telephone Company Obligations. See also Telephone Company Undertaking.	6.5	6-117	
Telephone Company Undertaking			
carrier common line access service	3.3	3-2	
BellSouth direct access to directory			(T)
assistance service	9.3.2	9-15	
BellSouth directory assistance access service	9.1.2	9-1	(T)
end user access service	4.3	4-1	
general	2.1	2-1	
Telephone Numbers			
- ownership of	2.1.12	2-8	
Termination BHMCs. See Busy Hour Minutes of Capacity.			
Termination Charges at discontinuance of service to non-complying customer	2.1.8(A)	2-6	

****

ACCESS SERVICE TARIFF SUBJECT INDEX

Subject	Section No.	Page No.	
Terminating Direction, definition	2.6	2-70	
Testing. See also Acceptance Testing; Testing Services.			
availability.	2.3.4	2-10	
Testing Services			
rates and charges	13.3.5(C)	13-31	
BellSouth SWA	13.3.5(A)	13-26	(T)
Special Access (a.k.a. BellSouth SPA)	13.3.5(B)	13-30	(T)
Theft of Facilities	2.3.2	2-10	
Three Way Call Transfer	6.3.3(A)(8)	6-90	
Title Rights	2.4.6	2-36	
Transfer of Service	6.7.1(D)(4)	6-131	
	7.4.1(C)(4)	7-74.1	
Transition Measuring (105 Type) Test Line Responder, definition	2.6	2-71	
Transmission Parameters changes, rearrangements, and substitutions	2.1.7	2-5	
Transmission Path definition	2.6	2-71	(T)
Transport Element. See also BellSouth SWA Service.			
determining ordering, rating, and billing of access services where more than one exchange telephone company is involved	2.4.7	2-36	
Trunk Group, definition	2.6	2-72	

****

ACCESS SERVICE TARIFF SUBJECT INDEX

Subject	Section No.	Page No.	
BellSouth SWA TSBSA 2	6.2.8.2	6-67	
BellSouth SWA 500 Service	6.1.1(E)	6-4	
BellSouth SWA 8XX Toll Free Dialing Ten Digit Screening Service	6.1.1(F)	6-4	
BellSouth SWA 900 Service	6.1.1(G)	6-4	
access minutes - recorded by IC	3.5.2	3-3	
common switching optional features	6.2.8.2(B)(1)	6-70	
description	6.2.8.2(A)	6-67	
design blocking probability	6.5.7	6-120	
design and traffic routing	6.5.2	6-118	
interface groups	6.1.3(A)(1)	6-11	
local switching	6.1.3(B)	6-26	
manner of provision	6.1.1(I)	6-6	
measuring access minutes	6.7.8	6-142	
mileage measurement	6.7.13	6-151	
minimum monthly charge	6.7.4	6-138	
moves	6.7.7	6-141	
optional features	6.2.8.2(B)	6-70	
ordering	6.1.7	6-28	
rates and charges	6.8	6-157.1	
rate categories	6.1.3	6-8	
rate regulations	6.7	6-125	
testing capabilities	6.2.8.2(D)	6-72	
transmission specifications	6.2.8.2(C)	6-72	
transport termination optional feature	6.2.8.2(B)(5)	6-71	
BellSouth SWA TSBSA 3			
carrier common line-prorate for resale	3.6.4	3-5	
common switching optional features	6.2.B.8(B)(1)	6-75.2	
BellSouth SWA 8XX Toll Free Dialing Ten Digit Screening Service	6.1.1(E)	6-4	(T)1
BellSouth SWA 900 Service	6.1.1(F)	6-4	(T)
description	6.2.8.3(A)	6-73	
design blocking probability	6.5.7	6-120	
determination of number of transmission paths	6.5.5	6-119	
interface groups	6.1.3(A)(5)	6-11.4	
jurisdictional report verification	2.3.10(B)	2-17	
local switching	6.1.3(B)	6-26	
manner of provision	6.1.1(I)	6-6	
measuring access minutes	6.7.8	6-142	
mileage measurement	6.7.13	6-151	
minimum monthly charge	6.7.4	6-138	
moves	6.7.7	6-141	
network blocking charge	6.7.9	6-148	

****

ACCESS SERVICE TARIFF SUBJECT INDEX

Subject	Section No.	Page No.	
BellSouth SWA TSBSA 3	(Cont'd)		(T)
optional features	6.2.8.3(B)	6-75.2	
ordering	6.1.7	6-28	
premium rates	6.7.1(E)	6-32	
rates and charges	6.8	6-157.1	
rate categories	6.1.3	6-8	
testing capabilities	6.2.8.3(D)	6-75.5	
transmission specifications	6.2.8.3(C)	6-75.4	

****

ACCESS SERVICE TARIFF SUBJECT INDEX

Subject	Section No.	Page No.	
Trunk Side Connection, definition	2.6	2-72	
Two-Wire to Four-Wire Conversion, definition	2.6	2-72	
Unlawful Use/Abusive Use	2.2.2	2-9	
Use and Restoration of Services	2.1.2(B)	2-2	
User Initiated Diagnostics	13.3.10(A)(2)(a)	13-62	
V and H Coordinates Method, definition	2.6	2-73	
Video (a.k.a. BellSouth SPA Video) Service	7.2.5	7-36	
basic channel, description			
broadcast quality	7.2.5.1(A)	7-36	
commercial quality	7.2.5.2(A)	7-38.1	
channel interfaces, description			
broadcast quality	7.2.5.1(C)	7-38	
commercial quality	7.2.5.2(C)	7-38.2	
rates and charges			
broadcast quality	7.5.5.1	7-127	
commercial quality	7.5.5.2	7-129.1	
technical specifications, description			
broadcast quality	7.2.5.1(B)	7-37	
commercial quality	7.2.5.2(B)	7-38.2	
BellSouth Virtual Expanded Interconnection Service			
confidential information	20.1.11	20-10	
description	20.1.1	20-1	
force majeure	20.1.13	20-10	
inspections	20.1.7	20-5	
liability and damages	20.1.10	20-6	
limitations	20.1.3	20-2.1	
maintenance	20.1.9	20-6	
rate regulations	20.1.14	20-11	
rates and charges	20.4	20-16	
regulations	20.1.2	20-1	
service activation	20.1.5	20-4.1	
service application	20.1.4	20-4.1	
title	20.1.12	20-10	
training	20.1.14.1	20-13	
Virtual Access Cross Connect Service	13.3.24	13-76.18	(N)
Rates and Charges	13.3.24	13-76.18	(N)

All BellSouth marks contained herein and as set forth in the trademarks and servicemarks section of this Tariff are owned by BellSouth Intellectual Property Corporation.
****

ACCESS SERVICE TARIFF SUBJECT INDEX

Subject	Section No.	Page No.	
Voice Grade (a.k.a. BellSouth DSO VG) Service	7.2.3	7-21	(T)
basic channel, description	7.2.3(A)	7-21	
channel interfaces, description	7.2.3(C)	7-22	
four wire/two wire conversions, description	7.2.3(E)	7-32	
optional features and functions, description	7.2.3(D)	7-23	
rates and charges	7.5.3	7-108	
rate stability plan	7.4.13	7-94	
technical specifications, description	7.2.3(B)	7-22	
War. See Emergency Conditions			
Warranty of Services	2.1.1(E)	2-1	
when used in explosive atmosphere	2.1.3(F)	2-4	
BellSouth SWA WATS Service	6.1.2	6-8	(T)
BellSouth SWA WATS Termination	6.3.7	6-107	(T)

****

ACCESS SERVICE TARIFF SUBJECT INDEX

Subject	Section No.	Page No.	
WATS Access Line (WAL) (a.k.a. BellSouth SPA WATS Line) Service	7.2.3.1	7-32	
basic channel, description	7.2.3.1(A)	7-32	
optional features and functions	7.2.3.1(D)	7-34	
rates and charges	7.5.3.1	7-119	
technical specifications, description	7.2.3.1(B)	7-33	
WAL (a.k.a. BellSouth SPA WATS Line) interfaces, description	7.2.3.1(C)	7-34	
BellSouth SWA WATS Serving Office, definition	2.6	2-73	
BellSouth SWA WATS. See BellSouth SWA FGC Service.			
BellSouth SWA WATS-type Service, See BellSouth SWA FGA; BellSouth SWA FGB; BellSouth SWA FGD.			
BellSouth Wavelength Service	29.1	29-1	(N)
Credit allowance	2.4.4(B)(17)	2-33.7	(N)
general description	29.1.1	29-1	(N)
regulations	29.1.6	29-3	(N)
rate categories	29.1.8	29-5	(N)
rate regulations	29.1.7	29-3	(N)
rates and charges	29.1.9	29-6	(N)
Wideband Analog (a.k.a. BellSouth SPA Wideband Analog) Service	7.2.6	7-39	
basic channel, description	7.2.6(A)	7-39	
channel interfaces, description	7.2.6(C)	7-40	
optional features and functions, description	7.2.6(D)	7-40	
rates and charges	7.5.6	7-130	
technical specifications, description	7.2.6(B)	7-39	
Wideband Data (a.k.a. BellSouth SPA Wideband Data) Service	7.2.7	7-41	
basic channel, description	7.2.7(A)	7-41	
channel interfaces, description	7.2.7(C)	7-42	
optional features and functions, description	7.2.7(D)	7-43	
rates and charges	7.5.7	7-133	
technical specifications, description	7.2.7(B)	7-42	
Wire Center definition	2.6	2-73	
Wire, provided by Telephone Company	2.1.5	2-5	

****

ACCESS SERVICE

ISSUING CARRIER (T)

BELLSOUTH TLECOMMUNICATIONS, INC.

CONCURRING CARRIERS

NO CONCURRING CARRIERS

CONNECTING CARRIERS

NO CONNECTING CARRIERS

OTHER PARTICIPATING CARRIERS

NO OTHER PARTICIPATING CARRIERS

TRADEMARKS AND SERVICEMARKS (T)

BellSouth Intellectual Property Corporation owns the trademarks and (N)
servicemarks shown below. All of the trademarks and servicemarks shown below (N)
may or may not be an offering available in this Tariff. Marks of other (N)
companies will be identified on the tariff page where the mark appears. (N)

BellSouth® AccuPulse® Service
(AccuPulse service) (N)

BellSouth® ESSX® Service
(ESSX service) (N)

BellSouth® Digital ESSX® Service
(Digital ESSX service) (N)

BellSouth® FlexServ® Service
(FlexServ Service) (N)
(a.k.a. BellSouth SPA Customer Reconfiguration Service)

BellSouth® MegaLink® Service
(MegaLink Service) (N)

BellSouth® LightGate® Service
(LightGate Service)
(a.k.a. BellSouth SPA Point to Point Network service) (N)

BellSouth® MultiServ® Service
(MultiServ Service) (N)

BellSouth® MultiServ® Plus Service
(MultiServ Plus Service) (N)

All BellSouth marks contained herein and as set forth in the trademarks and servicemarks section of this Tariff are owned by BellSouth Intellectual Property Corporation.
****

ACCESS SERVICE

TRADEMARKS AND SERVICEMARKS (CONT'D) (N)

BellSouth Intellectual Property Corporation owns the trademarks and (N)
servicemarks shown below. All of the trademarks and servicemarks shown below (N)
may or may not be an offering available in this Tariff. Marks of other (N)
companies will be identified on the tariff page where the mark appears. (N)

BellSouth® SMARTGate® Service (N)
(SMARTGate Service) (N)
(a.k.a. BellSouth SPA Managed Shared Ring Network Service) (N)

BellSouth® SMARTPath® Service (N)
(SMARTPath Service) (N)
(a.k.a. BellSouth SPA DS1 Shared Ring Service) (N)

BellSouth® SMARTRing® Service (N)
(SMARTRing Service) (N)
(BellSouth SWA Dedicated Ring Service) (N)
(a.k.a. BellSouth SPA Dedicated Ring Service) (N)

All BellSouth marks contained herein and as set forth in the trademarks and servicemarks section of this Tariff are owned by BellSouth Intellectual Property Corporation.
****

ACCESS SERVICE

EXPLANATION OF SYMBOLS

C	-	To signify changed regulation
D	-	To signify discontinued rate or regulation
I	-	To signify increase
M	-	To signify matter relocated without change
N	-	To signify new rate or regulation
R	-	To signify reduction
S	-	To signify reissued matter
T	-	To signify a change in text but no change in rate or regulation
Z	-	To signify a correction

EXPLANATION OF ABBREVIATIONS

ac	-	alternating current	
ACNA	-	Access Carrier Name Abbreviation	
ACTL	-	Access Carrier Terminal Location	(N)
AML	-	Actual Measured Loss	
ANI	-	Automatic Number Identification	
AP	-	Program Audio	
ASR	-	Access Service Request	
ATP	-	Access Transport Parameter	
AT&T-C	-	AT&T Communications	
BAN	-	Billing Account Number	
BCLID	-	Bulk Calling Line Information Delivery	
BD	-	Business Day	
BHMC	-	Busy Hour Minutes of Capacity	
BOC	-	Bell Operating Company	
BSA	-	BellSouth SWA Basic Serving Arrangement	
BSE	-	Basic Service Element	
CAROT	-	Centralized Automatic Reporting on Trunks	
CCSAC	-	BellSouth SWA Common Channel Signaling Access Capability	
CI	-	Channel Interface	
CN	-	Charge Number	
CO	-	Central Office	
COCTX	-	Central Office Centrex	
Cont'd	-	Continued	
CPE	-	Customer Provided Equipment	
CPN	-	Calling Party Number	
CSP	-	Carrier Selection Parameter	
CSPP	-	Channel Services Payment Plan	
Ctx	-	Centrex	
DA	-	BellSouth Directory Assistance	
DADAS	-	BellSouth Direct Access to Directory Assistance Service	
dB	-	decibel	
dBmO	-	Decibel (s) Relative to 1 Milliwatt at 0 TLP	
dBrnC	-	Decibel Reference Noise C-Message Weighting	
dBrnCO	-	Decibel Reference Noise C-Message Weighted 0	

All BellSouth marks contained herein and as set forth in the trademarks and servicemarks section of this Tariff are owned by BellSouth Intellectual Property Corporation.
****

ACCESS SERVICE

EXPLANATION OF ABBREVIATIONS

dBv	-	Decibel(s) Relative to 1 Volt (Reference)	
dBv1	-	Decibel(s) Relating to 1 Volt (Reference)	
dc	-	direct current	
DDAS	-	Digital Data Access Service (a.k.a. BellSouth SPA DSO Digital Data)	(T)
DDCS	-	Derived Data Channel Service	
DID	-	Direct Inward Dialing	
DOD	-	Direct Outward Dialing	
DOV	-	Data Over Voice Channel	

****

ACCESS SERVICE

EXPLANATION OF ABBREVIATIONS

EDD	-	Envelope Delay Distortion
ELEPL	-	Equal Level Echo Path Loss
EML	-	Expected Measured Loss
EPL	-	Echo Path Loss
ERL	-	Echo Return Loss
ESS	-	Electronic Switching System
ESSX	-	Electronic Switching System Exchange
f	-	frequency
FID	-	Field Identifier
F.C.C.	-	Federal Communications Commission
FGA	-	BellSouth SWA FGA - (Feature Group A)
FGB	-	BellSouth SWA FGB - (Feature Group B)
FGC	-	BellSouth SWA FGC - (Feature Group C)
FGD	-	BellSouth SWA FGD - (Feature Group D)
FX	-	Foreign Exchange
HC	-	High Capacity (a.k.a. BellSouth SPA High Capacity)
Hz	-	Hertz
IC	-	Interstate Customer
ICB	-	Individual Case Basis
ICL	-	Inserted Connection Loss
IPTG	-	Internet Protocol Telephony Gateway
kbps	-	kilobits per second
kHz	-	kilohertz
LATA	-	Local Access and Transport Area
LSBSA	-	BellSouth SWA Line Side Basic Serving Arrangement
LIDB	-	BellSouth Line Information Data Base
Ma	-	milliamperes
Mbps	-	Megabits per second
MHz	-	Megahertz
MMUC	-	Minimum Monthly Usage Charge
MRC	-	Monthly Recurring Charge
MT	-	Metallic (a.k.a. BellSouth SPA Metallic)
MTS	-	Message Telecommunications Service(s)
MTSO	-	Mobile Telephone Switching Office
NCI	-	Network Channel Interface
NPA	-	Numbering Plan Area
NRC	-	Nonrecurring Charge
NTS	-	Non-Traffic Sensitive
NXX	-	Three-Digit Central Office Code
OSS	-	Operator Services System Location
OTPL	-	Zero Transmission Level Point
PBX	-	Private Branch Exchange
PCM	-	Pulse Code Modulation
PIU	-	Percent Interstate Usage
PLR	-	Private Line Ringdown
POT	-	Point of Termination
PSIP	-	Premium Service Incentive Plan (N)

All BellSouth marks contained herein and as set forth in the trademarks and servicemarks section of this Tariff are owned by BellSouth Intellectual Property Corporation.
****

ACCESS SERVICE

EXPLANATION OF ABBREVIATIONS

rms	-	root-mean-square
RSM	-	Remote Switching Modules
RSS	-	Remote Switching Systems
SCP	-	Service Control Point
SMDI	-	Simplified Message Desk Interface
SPA	-	Special Access (a.k.a. BellSouth SPA)
SPOI	-	Signaling Point of Interface
SPUR	-	Service Provided Upon Request
SRL	-	Singing Return Loss
SS7	-	Signaling System 7
SSN	-	Switched Service Network
SSP	-	Service Switching Point
STP	-	Signal Transfer Point
SWA	-	BellSouth Switched Access
SWC	-	Serving Wire Center
TCAP	-	Transactions Capabilities Application Part Messages
TES	-	Telephone Exchange Service(s)
TG	-	Telegraph Grade
TLP	-	Transmission Level Point
TOPS	-	Traffic Operator Position System
TRS	-	BellSouth Telecommunications Relay Service
TRSTS	-	BellSouth Telecommunications Relay Service Transport Service
TSBSA	-	BellSouth SWA Trunk Side Basic Serving Arrangement
TV	-	Television
UNEs	-	Unbundled Network Elements (N)
USOC	-	Uniform Service Order Code
VEIS	-	BellSouth Virtual Expanded Interconnection Service
VG	-	Voice Grade (a.k.a. BellSouth SPA DSO VG)
V & H	-	Vertical & Horizontal
WA	-	Wideband Analog (a.k.a. BellSouth SPA Wideband Analog)
WATS	-	BellSouth SWA Wide Area Telecommunications Service(s)
WD	-	Wideband Data (a.k.a. BellSouth SPA Wideband Data)

****

ACCESS SERVICE

REFERENCE TO OTHER TARIFFS

Whenever reference is made in this tariff to other tariffs of the Telephone Company, the reference is to the tariffs in force as of the effective date of this tariff, and to amendments thereto and successive issues thereof.

REFERENCE TO OTHER PUBLICATIONS

The following technical publication is referenced in this tariff and may be obtained from the Telecommunications Industry Association, 2001 Pennsylvania Avenue, N.W., Washington, D.C. 20006-1813.

Telecommunications Industry Association
Interim Standard 41 - Cellular Radio
Telecommunications Intersystem Operations Standards (TIA-IS41)

The following publications are referenced in this tariff and may be obtained from Bell Communications Research, Inc., Customer Services, 8 Corporate Place, Piscataway, N.J. 08854.

MDP 326-463 (formerly PUB 41451)
Issued: August, 1983 Available: August, 1983

MDP 326-584 (formerly PUB 41004)
Issue 1
Issued: October, 1973 Available: October, 1973 (T)(x)

MDP 326-726 (formerly PUB 62310)
Issued: September, 1983 Available: October, 1983

(x) Issued under the authority of Special Permission No. 95-143.

****

REFERENCE TO OTHER PUBLICATIONS (CONT'D)

SR-STS-000320, Issue 10
Issued: November, 1993 Available: November, 1993

SR-TAP-000191, Issue 2
Issued: December 1989 Available: December, 1989

TR-NPL-000054, Issue 1, (Replaces PUB 62508, 2411 & 62411A)
Issued: April, 1989 Available: May, 1989

TR NPL-000258, Issue 1
Issued: October, 1985 Available: October, 1985

TR-NWT-000334, Issue 3, (Replaces PUB 62500)
Issued: March, 1993 Available: March, 1993

TR-NWT-000335, Issue 3, (Replaces PUB 62501)
Issued: May, 1993 Available: May, 1993

TR-NPL-000336, Issue 1, (Replaces PUB 62502)
Issued: October, 1987 Available: October, 1987

TR-NPL-000337, Issue 1, (Replaces PUB 62503)
Issued: July, 1987 Available: July, 1987

(D)
(D)

TR-NPL-000339, Issue 1, (Replaces PUB 62505)
Issued: July, 1990 Available: July, 1990

TR-TSV-001060 Available: December, 1991

TR-TSV-001239 Available: December, 1993

TS-TSV-001370, Issue 1 Available: May, 1993

****

ACCESS SERVICE

REFERENCE TO OTHER PUBLICATIONS (CONT'D)

TR-NPL-000340, Issue 1, (Replaces PUB 62506) Issued: October, 1987	Available:	October, 1987	
TR-NWT-000341, Issue 2, (Replaces PUB 62507) Issued: February,1993	Available:	February, 1993	
TR-INS-000342, Issue 1, (Replaces PUB 62508) Issued: February, 1991	Available:	February, 1991	
TR-NWT-000063, Issue 4 Issued: July, 1991	Available:	July, 1991	
FR-NWT-000271, 1994 Edition, Issue 1 Issued: January, 1994	Available:	January, 1994	(T)(x) (T)(x)
TR-NWT-000246, Issue 1 Issued: December, 1994	Available:	December, 1994	(T)(x) (T)(x)
TR-TSV-000905, Issue 2 Issued: October, 1993	Available:	October, 1993	
TR-TSV-000954, Issue 1 Issued: June, 1994	Available:	June, 1994	(T)(x) (T)(x)
TR-TSV-000962, Issue 1 Issued: September, 1990	Available:	September, 1990	
Ordering and Billing Forum (OBF) Multiple Exchange Carrier Access Billing (MECAB) Issued: November, 1987	Available:	January, 1988	
TR-TSY-000020, Issue 4 Issued: March, 1989	Available:	March, 1989	
TR-NWT-000496, Issue 3 Issued: May, 1992	Available:	May, 1982	
TR-TSY-000064 Issued: September, 1989	Available:	September, 1989	

(D)(x)
(D)(x)

(x) Issued under the Authority of Special Permission No. 95-143.

****

ACCESS SERVICE

REFERENCE TO OTHER PUBLICATIONS (CONT'D)

The following technical publications referenced in this tariff may be obtained from the Bell Communications Technical Education Center, Room B02, 6200 Route 53, Lisle, IL 60532

Telecommunications Transmission Engineering
Volume 3 - Networks and Services (Chapter 6 and 7)
Second Edition, 1980
Issued: June, 1980 Available: June, 1980

Ordering and Billing Forum (OBF)
Multiple Exchange Carrier Ordering
and Design (MECOD)
Issued: November, 1987 Available: January, 1988

TR-TSV-000905, Issue 1
Issued: August, 1989 Available: August, 1989

The following technical publications referenced in this tariff may be obtained from the American National Standards Institute, 11 West 42nd Street, New York, New York 10036

ANSI T1.403-1989	Available: July, 1993	
ANSI T1.404-1994	Available: June, 1994	
ANSI T1.105-1991	Available: February, 1994	
ANSI T1.617-1991	Available: April, 1994	
ANSI T1.618-1991	Available: April, 1994	
ANSI-T1.107a-1990	Available: August 16, 1990	
ANSI-T1.107b-1991	Available: January, 1991	
ANSI-X3.64-1979	Available: 1979	
ANSI-T1.631-1993	Available: June, 1993	(N)(x)
ANSI-T1.1111-1996	Available: 1996	(N)(x)

(x) Issued under the Authority of Special Permission No. 99-172

****

ACCESS SERVICE

REFERENCE TO OTHER PUBLICATIONS (CONT'D)

The following technical publication is referenced in this tariff and may be obtained from the National Exchange Carrier Association, Inc., Director-Tariff and Regulatory Matters, 100 S. Jefferson Road, Whippany, NJ 07981.

PUB AS No. 1, Issue II
Issued: March, 1987 Available: March, 1987

The following publications are referenced in this tariff and may be obtained from the Federal Communications Commission's commercial contractor.

National Exchange Carrier Association, Inc.
Tariff F.C.C. No. 4
Issued: January, 1987 Available: January, 1987

National Exchange Carrier Association, Inc.
Tariff F.C.C. No. 5
Issued: April, 1988 Available: April, 1988

The following publication, referenced in this tariff, is available for inspection in the Public Reference Room of the Tariff Division at the main building of the Federal Communications Commission located at 1919 M Street N.W., Washington, D.C., and may be obtained from the Commission's commercial contractor:

CC Docket No. 83-1145, Phase I
Memorandum Opinion and Order
(Including Appendices A, B, and C)
Adopted: May 31, 1985 Released: June 12, 1985

The following publication, referenced in this tariff, may be obtained from BellSouth Telecommunications, Inc., Regional Documentation Coordinator, 20th Floor, 600 North 19th Street, Birmingham, Alabama 35203.

BellSouth Guidelines to Technical Publication TR-TSV-000905
Issued: August, 1990 Available: August, 1990

TR-73501, Issue E (T)
Issued: September, 2000 Available: September, 2000 (T)

TR-73503, Issue C
Issued: January, 1992 Available: January, 1992

****

REFERENCE TO OTHER PUBLICATIONS (CONT'D)

The following publications, referenced in this tariff, may be obtained from BellSouth Telecommunications, Inc., Regional Documentation Coordinator, 20th Floor, 600 North 19th Street, Birmingham, AL 35203.

TR-73513
Issued: June, 1987 Available: June, 1987

TR-73515, Issue B
Issued April, 1991 Available: April, 1991

TR-73516 - Issue C
Corporate Packet Network Physical
Interface Specifications
Issued: September, 1991 Available: September, 1991

TR-73535
Corporate Packet Network
Asynchronous Terminal Access
Issued: August, 1989 Available: August, 1989

TR-73548
Issued: June, 1990 Available: June, 1990

TR-73548, Addendum 1
Issued: March, 1991 Available: March, 1991

TR-73572
Issued: April, 1993 Available: April, 1993

TR-73582, Issue C (T)
Issued: October, 2000 Available: October, 2000 (T)

TR-73585
Asynchronous Transfer Mode (ATM) Network Interface and Performance
Specifications
Issued: May, 1998 Available: May, 1998

TR-73587
Frame Relay Service Interface and Performance Specifications
Issued: December, 1994 Available: December, 1994

****

ACCESS SERVICE

REFERENCE TO OTHER PUBLICATIONS (CONT'D)

The following publications, referenced in this tariff, may be obtained from BellSouth Telecommunications, Inc., Regional Documentation Coordinator, 20th Floor, 600 North 19th Street, Birmingham, AL 35203.

TR-73575
Issued: February, 1994 Available: February, 1994

TR-73575, Addendum 1
Issued: November, 1994 Available: November, 1994

TR-73583
Issued: November, 1994 Available: September, 1994

TR-73592
Issued: June, 1995 Available: June, 1995

BellSouth Enhanced Originating Line Screening (EOLS) Service
Technical Reference
TR-73604
Issued: July, 1997 Available: August, 1977

TR-73606
Issued: April, 1998 Available: April, 1998

TR-73607
Issued: April, 1998 Available: April, 1998

TR-73608
Issued: April, 1998 Available: April, 1998

TR-73609
Issued: April, 1998 Available: April, 1998

TR-73611
Issued: April, 1998 Available: April, 1998

BellSouth ADSL Service
TR-73612
Issued: April, 2001 Available: April, 2001

TR-73621
Issued: September, 1999 Available: September, 1999

TR-73624
Issued: March, 2002 Available: March, 2002

TR-73630
Issued: October, 2002 Available: October, 2002

TR-73631BT (N)
Issued: March, 2003 Available: March, 2003 (N)

****

ACCESS SERVICE

REFERENCE TO OTHER PUBLICATIONS (CONT'D)

The following technical publications, referenced in this tariff, may be (M)
obtained, and are available under a licensed protocol, from Northern Telecom, (M)
Attn.: Frank Vallone, 97 Humboldt Street, Rochester, N.Y. 14609. (M)

Northern Telecom Document Q210-1 Version AI07 (M)
NTDMS/CCIDAS System Application Protocol (M)

Northern Telecom Document CSI-2300-07 (M)
Universal Gateway/Position Message Interface (M)
Format Specification (M)

Northern Telecom Document 355-00424 (M)
Gateway/Interactive Voice Subsystem (M)
Protocol Specification (M)

The following technical publication, referenced in this tariff, may be obtained from AT&T, P.O. Box 19901, Indianapolis, Indiana 46219.

AT&T Document 250-900-535, Issue 0003.00
Operator Services Position System Listing Service
Issued: July, 1992 Available: July, 1992

Certain material now appearing on this page previously appeared on 10th Revised Page 75.2.

****

REFERENCE TO OTHER PUBLICATIONS (CONT'D)

The following technical publications are referenced in this tariff and are available from the Government Printing Office, Superintendent of Documentation, Document Control Branch, 941 North Capital Street, N.E., Washington, D.C. 20401:

TSP Service User Manual
(NCS Manual 3-1-1)
Dated July 9, 1990

TSP Service Vendor Handbook
(NCS Manual 3-1-2)
Dated July 9, 1990

(D)(x)
(D)(x)

(D)(x)
(D)(x)

The following publication, referenced in this tariff, may be obtained from Director - Sales Operations, Integrated Network Corporation, P.O. Box 6875, Bridgewater, N.J. 08807.

Integrated Network Corporation
Document CB-INC-100

The following publication, referenced in this tariff, may be obtained from the Bureau of Census, Washington, D.C. 20233.

Bureau of Census Topologically Integrated Geographic Encoding and Referencing (TIGER) Line Data

The following publication, referenced in this tariff, may be obtained from BellCore, Attn.: Customer Relations, Room 3A1H4, 8 Corporate Place, Piscataway, N.J. 08854.

BellCore Technical Memorandum TMSTS - 022048

Operational System Modification for Intelligent Network Elements (OSMINE)

GR-485-CORE (T)(x)
Revised October, 1991

The following publication, referenced in this tariff, may be obtained from National Fire Protection Association, Batterymarch Park, Quincy, Massachuetts 02269.

National Electric Code
1993 Handbook

(x) Issued under the authority of Special Permission No. 95-143.

****

REFERENCE TO OTHER PUBLICATIONS (CONT'D)

The following publications referenced in this tariff, may be obtained from Frame Relay Forum Secretariat, 480 San Antonio Road, Suite 100, Mountain View, CA 94010.

Document No. 001-208966, Revision 1.0Available: September, 1990

Frame Relay Forum Document FRF.2Available: August, 1992

The following technical publications referenced in this tariff may be obtained from Cascade Communications Corporation, 5 Carlisle Road, Westford, MA 10036

Document No. 80011Available: July 15, 1994

Document No. 80012Available: July 15, 1994

The following technical publication, referenced in this tariff, may be obtained from ATM Forum, 2570 West El Camino Real, Suite 304, Mountain View, California, 94040.

ATM User-Network Interface Specification
(Versions 3.0 and 3.1)Available:May, 1998

The following publication referenced in this tariff may be obtained from Superintendent of Documents, P.O. Box 371954, Pittsburgh, PA 15250.

Federal Acquisition Regulation Available: July, 1997

The following technical publications, referenced in this tariff, may be (N)
obtained from the Internet Engineering Task Force (IETF) at Corporation for (N)
National Research Initiatives, Attention: Accounting Department - IETF (N)
Proceedings, 1895 Preston White Drive, Suite 100, Reston, VA 20191-5434 or (N)
via Internet at www.ietf.org. (N)

STD001, Internet Official Protocol Standards, J. Reynolds, R. Braden, Editor, (N)
issued June 1999 (N)

RFC 2138, Remote Authentication Dial-In User Service (RADIUS); C. Rigney, A. (N)
Rubens, W. Simpson, S. Willens, issued April, 1997 (N)

****

ACCESS SERVICE

1 - Application of Tariff

1.1 This tariff contains regulations, rates and charges applicable to the provision of Carrier Common Line, End User Access, BellSouth SWA and Special Access (a.k.a. BellSouth SPA) Services, BellSouth Virtual Expanded Interconnection Service, Lifeline Assistance, Universal Service Fund and other miscellaneous services, hereinafter referred to collectively as service(s), provided by the BellSouth Telecommunications, Inc., hereinafter referred to as the Telephone Company, to customers.

Pursuant to the Commission's Rules at Section 69.4(c), 69.5(d), 69.104(1), 69.116, 69.117, 69.603(c), and 69.603(d), regulations concerning administration and billing of Lifeline Assistance and Universal Service Fund, rates and charges for these carrier's carrier elements are contained in Section 8 of the National Exchange Carrier Association, Inc., Tariff F.C.C. No. 5. The National Exchange Carrier Association, Inc., will bill and collect all Lifeline Assistance and Universal Service Fund charges on behalf of the Telephone Company.

1.2 The provision of such services by the Telephone Company as set forth in this tariff does not constitute a joint undertaking with the customer for the furnishing of any service.

1.3 The operating territory of the Telephone Company is comprised of the locations set forth in Section 15 following for the states of Alabama, Florida, Georgia, Kentucky, Louisiana, Mississippi, North Carolina, South Carolina and Tennessee.

(D)(x)
(D)(x)
(D)(x)
(D)(x)
(D)(x)

(x) Withdraws material filed under Transmittal No. 742 under authority of Special Permission NO. 03-089.

****

ACCESS SERVICE

2 - General Regulations

2.1 Undertaking of the Telephone Company

2.1.1 Scope

(A) The Telephone Company does not undertake to transmit messages under this tariff.

(B) The Telephone Company shall be responsible only for the installation, operation and maintenance of the service it provides.

(C) The Telephone Company will, for maintenance purposes, test its services only to the extent necessary to detect and/or clear troubles.

(D) Services are provided 24 hours daily, seven days per week, except as set forth in other applicable sections of this tariff.

(E) The Telephone Company does not warrant that its facilities and services meet standards other than those set forth in this tariff.

2.1.2 Limitations

(A) The customer may not assign or transfer the use of services provided under this tariff, except as provided herein. Where there is no interruption of use or relocation of the services, such assignment or transfer may be made for all services, to: (C)(x) (C)(x)

(1) Another customer whether an individual, partnership, association or corporation, provided the assignee or transferee assumes all outstanding indebtedness for such services, and the unexpired portion of the minimum period and the termination liability applicable to such services, if any; or

(2) A court-appointed receiver, trustee or other person acting pursuant to law in bankruptcy, receivership, reorganization, insolvency, liquidation or other similar proceedings, provided the assignee or transferee assumes the unexpired portion of the minimum period and the termination liability applicable to such services, if any.

(x) Issued under the authority of Special Permission No. 93-455.

****

ACCESS SERVICE

2 - General Regulations (Cont'd)

2.1 Undertaking of the Telephone Company (Cont'd)

2.1.2 Limitations (Cont'd)
(A) (Cont'd)
(2) (Cont'd)

In all cases of assignment of transfer, the written acknowledgment of the Telephone Company is required prior to such assignment or transfer. Such acknowledgment shall be made within 15 days from the receipt of notification. All regulations and conditions contained in this tariff shall apply to such assignee or transferee.

The assignment or transfer of services does not relieve or discharge the assignor or transferor from remaining jointly or severally liable with the assignee or transferee for any obligations existing at the time of the assignment or transfer.

(B) The use and restoration of services shall be in accordance with Part 64, Subpart D, and Part 64, Appendix A, of the Federal Communications Commission's Rules and Regulations, which specifies the priority system for such activities.

(C) Subject to compliance with the rules mentioned in (B) preceding, the services offered herein will be provided to customers on a first-come, first-served basis.

2.1.3 Liability

The following liability provisions apply for all services except BellSouth Virtual Expanded Interconnection Service. Liability provisions for BellSouth Virtual Expanded Interconnection arrangements are contained in 20.26 following. (T) (T) (T)

(A) The Telephone Company's liability, if any, for its willful misconduct is not limited by this tariff. With respect to any other claim or suit, by a customer, or by any others, for damages associated with the installation, provision, preemption, termination, maintenance, repair or restoration of service, and subject to the provisions of (B) through (H) following, the Telephone Company's liability shall not exceed an amount equal to the proportionate charge for the service for the period during which the service was affected. This liability for damages shall be in addition to any amounts that may otherwise be due the customer under this tariff as a Credit Allowance for a Service Interruption.

****

ACCESS SERVICE

2 - General Regulations (Cont'd)

2.1 Undertaking of the Telephone Company (Cont'd)

2.1.3 Liability (Cont'd)

(B) The Telephone Company shall not be liable for any act or omission of any other carrier or customer providing a portion of a service, nor shal1 the Telephone Company for its own act or omission hold liable any other carrier or customer providing a portion of a service.

(C) The Telephone Company is not liable for damages to the customer premises resulting from the furnishing of a service, including the installation and removal of equipment and associated wiring, unless the damage is caused by the Telephone Company's negligence.

(D) The Telephone Company shall be indemnified, defended and held harmless by the end user against any claim, loss or damage arising from the end user's use of services offered under this tariff, involving:

(1) Claims for libel, slander, invasion of privacy, or infringement of copyright arising from the end user's own communications;

(2) Claims for patent infringement arising from the end user's acts combining or using the service furnished by the Telephone Company in connection with facilities or equipment furnished by the end user or IC or;

(3) All other claims arising out of any act or omission of the end user in the course of using services provided pursuant to this tariff.

(E) The Telephone Company shall be indemnified, defended and held harmless by the IC against any claim, loss or damage arising from the IC's use of services offered under this tariff, involving:

(1) Claims for libel, slander, invasion of privacy, or infringement of copyright arising from the IC's own communications;

(2) Claims for patent infringement arising from the IC's acts combining or using the service furnished by the Telephone Company in connection with facilities or equipment furnished by the end user or IC or;

****

ACCESS SERVICE

2 - General Regulations (Cont'd)

2.1 Undertaking of the Telephone Company (Cont'd)

2.1.3 Liability (Cont'd)

(E) (Cont'd)

(3) All other claims arising out of an act or omission of the IC in the course of using services provided pursuant to this tariff.

(F) The Telephone Company does not guarantee or make any warranty with respect to its services when used in an explosive atmosphere. The Telephone Company shall be indemnified, defended and held harmless by the customer from any and all claims by any person relating to such customer's use of services so provided.

(G) No license under patents (other than the limited license to use) is granted by the Telephone Company or shall be implied or arise by estoppel, with respect to any service offered under this tariff. The Telephone Company will defend the customer against claims of patent infringement arising solely from the use by the customer of services offered under this tariff and will indemnify such customer for any damages awarded based solely on such claims.

(H) The Telephone Company's failure to provide or maintain services under this tariff shall be excused by labor difficulties, governmental orders, civil commotions, criminal actions taken against the Telephone Company, acts of God and other circumstances beyond the Telephone Company's reasonable control, subject to the Credit Allowance for a Service Interruption as set forth in 2.4.4 following.

2.1.4 Provision of Services

The Telephone Company, to the extent that such services are or can be made available with reasonable effort, and after provision has been made for the Telephone Company's Telephone Exchange Services, will provide to the customer upon reasonable notice services offered in other applicable sections of this tariff at rates and charges specified therein.

****

ACCESS SERVICE

2 - General Regulations (Cont'd)

2.1 Undertaking of the Telephone Company (Cont'd)

2.1.5 Installation and Termination of Services

With the exception of BellSouth Virtual Expanded Interconnection arrangements (T)
the Access Services provided under this tariff (A) will include any entrance
cable or drop wiring and wire or intrabuilding cable to that point where
provision is made for termination of the Telephone Company's outside
distribution network facilities at a suitable location inside a
customer-designated premises and (B) will be installed by the Telephone
Company to such Point of Termination. Each Access Service has only one Point
of Termination per customer premises. Any additional terminations beyond such
Point of Termination is the sole responsibility of the customer. The Point of
Termination is an inherent part of BellSouth SWA and Special Access (a.k.a. (T)
BellSouth SPA) services, therefore, the preceding does not preclude the (T)
customer's ability to have each Point of Termination moved as set forth in
6.7.7 and 7.4.5 following for BellSouth SWA and Special Access (a.k.a. (T)
BellSouth SPA) services, respectively. (T)

Provisions addressing BellSouth Virtual Expanded Interconnection arrangements (T)
are contained in Section 20 following.

2.1.6 Maintenance of Services

The services provided under this tariff shall be maintained by the Telephone Company. The customer or others may not rearrange, move, disconnect, remove or attempt to repair any facilities provided by the Telephone Company other than by connection or disconnection to any interface means used, except with the written consent of the Telephone Company.

2.1.7 Changes and Substitutions

Except as provided for equipment and systems subject to F.C.C. Part 68 Regulations at 47 C.F.R. Section 68.110(b), the Telephone Company may, where such action is reasonably required in the operation of its business, (A) substitute, change or rearrange any facilities used in providing service under this tariff, including but not limited to, (1) substitution of different metallic facilities, (2) substitution of carrier or derived facilities for metallic facilities used to provide other than metallic facilities and (3) substitution of metallic facilities for carrier or derived facilities used to provide other than metallic facilities, (B) change minimum protection criteria, (C) change operating or maintenance characteristics of facilities or (D) change operations or procedures of the Telephone Company. In case of any such substitution, change or rearrangement, the transmission parameters will

****

ACCESS SERVICE

2 - General Regulations (Cont'd)

2.1 Undertaking of the Telephone Company (Cont'd)

2.1.7 Changes and Substitutions (Cont'd)

be within the range as set forth in Section 6 and Section 7 following. The Telephone Company shall not be responsible if any such substitution, change or rearrangement renders any customer furnished services obsolete or requires modification or alteration thereof or otherwise affects their use or performance. If such substitution, change or rearrangement materially affects the operating characteristics of the facility, the Telephone Company will provide reasonable notification to the customer in writing. Reasonable time will be allowed for any redesign and implementation required by the change in operating characteristics. The Telephone Company will work cooperatively with the customer to determine reasonable notification requirements.

2.1.8 Refusal and Discontinuance of Service

(A) Unless the provisions of 2.2.1(B) or 2.5 following apply, if a customer fails to comply with 2.1.6 preceding or 2.2.2, 2.3.1, 2.3.4, 2.3.5, 2.3.10 or 2.4 following, including any payments to be made by it on the dates and times herein specified, the Telephone Company may, on thirty (30) calendar days written notice by Certified U.S. Mail or Overnight (C)
Delivery to the person designated by that customer to receive such (C)
notices of noncompliance, refuse additional applications for service and/or refuse to complete any pending orders for service by the noncomplying customer at any time thereafter. If the Telephone Company does not refuse additional applications for service on the date specified in the thirty (30) days notice, and the customer's noncompliance continues, nothing contained herein shall preclude the Telephone Company's right to refuse additional applications for service to the noncomplying customer without further notice.

(B) Unless the provisions of 2.2.1(B) or 2.5 following apply, if a customer fails to comply with 2.1.6 preceding or 2.2.2, 2.3.1, 2.3.4, 2.3.5, 2.3.10 or 2.4 following, including any payments to be made by it on the dates and times herein specified, the Telephone Company may, on thirty (30) calendar days written notice by Certified U.S. Mail or Overnight (C)
Delivery to the person designated by that customer to receive such (C)
notices of noncompliance, discontinue the provision of the services to the noncomplying customer at any time thereafter. In the case of such discontinuance, all applicable charges, including termination charges, shall become due. If the Telephone Company does not discontinue the (M)
provision of the services involved on the date specified in the thirty (M)
(30) days notice, and the customer's noncompliance continues, nothing (M)
contained herein shall preclude the Telephone Company's right to (M)
discontinue the provision of the services to the noncomplying customer (M)
without further notice. (M)

Certain material now appearing on this page previously appeared on 1ST Revised Page 2-7.

All BellSouth marks contained herein and as set forth in the trademarks and servicemarks section of this Tariff are owned by BellSouth Intellectual Property Corporation.
****

ACCESS SERVICE

2 - General Regulations (Cont'd)

2.1 Undertaking of the Telephone Company (Cont'd)

2.1.8 Refusal and Discontinuance of Service (Cont'd)

(M)

(C) In addition to and not in limitation of the provisions of 2.1.8(A) and 2.1.8(B) preceding, unless the provisions of 2.2.1(B) or 2.5 following apply, if a customer fails to comply with 2.4.1(A) or with 2.4.1(B)(3) following, including any payments to be made by it on the dates and times herein specified, the Telephone Company may take the actions specified in 2.1.8(A) and 2.1.8(B) on fifteen (15) calendar days written notice, such notice period to start the day after the notice is rendered by Certified Mail or Overnight Delivery, if the customer has not complied with respect to amounts due in a subject bill and either: (N)

(1) The Telephone Company has within (7) business days of the subject bill date: (N)

a. Mailed via the United States Postal Service (USPS) to the customer the subject bill in paper or CDROM form, or (N)

b. Overnight service delivered to the customer the subject bill in Magnetic Tape form, or (N)

c. Electronically Transmitted to the customer the subject bill. (N)

The Telephone Company will maintain records sufficient to validate the date upon which a subject bill was rendered to the customer. (N)

(2) The Telephone Company has rendered the subject bill, using one of the media described in (1) above, to the customer more than thirty (30) calendar days before notice under this section has been rendered. (N)

In all other cases, the Telephone Company will give thirty (30) calendar days written notice pursuant to 2.1.8(A) or 2.1.8(B). Action will not be taken with regard to the subject bill if the customer cures the noncompliance prior to the expiration of the fifteen (15) or thirty (30) calendar day notice period, as applicable. (N)

(D) If the National Exchange Carrier Association, Inc., notifies the Telephone Company in writing that the Customer has failed to comply with (T)

(M)

Certain material previously appearing on this page now appears on 2nd Revised Page 2-6 and 3rd Revised Page 2-8.

All BellSouth marks contained herein and as set forth in the trademarks and servicemarks section of this Tariff are owned by BellSouth Intellectual Property Corporation.
****

ACCESS SERVICE

2 - General Regulations (Cont'd)

2.1 Undertaking of the Telephone Company (Cont'd)

2.1.8 Refusal and Discontinuance of Service (Cont'd)

(D) (Cont'd)

Section 8 of the NATIONAL EXCHANGE CARRIER ASSOCIATION, INC. (NECA) (M)
TARIFF F.C.C. NO. 5 (Lifeline Assistance and Universal Service Fund (M)
charges) including any Customer's failure to make payments on the date (M)
and time specified therein, the Telephone Company, may, on thirty days' (M)
written notice to the Customer by Certified U.S. Mail, take any of the (M)
following actions: - (1) refuse additional applications for service (M)
and/or (2) refuse to complete any pending orders for service and/or (3) (M)
discontinue the provision of existing service(s) to the Customer. In (M)
the case of discontinuance, all applicable charges, including (M)
termination charges, shall become due and payable to the Company in (M)
immediately available funds. (M)

2.1.9 Limitation of Use of Metallic Facilities (M)

Signals applied to the metallic facility shall conform to the limitations set (M)
forth in Technical Reference Publication AS No. 1. In the case of application (M)
of dc telegraph signaling systems, the customer shall be responsible, at its (M)
expense, for the provision of current limiting devices to protect the (M)
Telephone Company facilities from excessive current due to abnormal conditions (M)
and for the provision of noise mitigation networks when required to reduce (M)
excessive noise. (M)

2.1.10 Notification of Service-Affecting Activities (M)

The Telephone Company will provide the customer reasonable notification of (M)
service-affecting activities that may occur in normal operation of its (M)
business. Such activities may include, but are not limited to, (M)
equipment or facilities additions, removals or rearrangements, routine preventative maintenance and major switching machine change-out. Generally, such activities are not individual customer service specific, they affect many customer services. No specific advance notification period is applicable to all service activities. The Telephone Company will work cooperatively with the customer to determine reasonable notification requirements.

2.1.11 Coordination with Respect to Network Contingencies

The Telephone Company intends to work cooperatively with the customer to develop network contingency plans in order to maintain maximum network capability following natural or man-made disasters which affect telecommunication services.

This includes developing plans for originating or terminating traffic associated with mass calling events directed to end users served from specific end offices. Where it is determined that such non-random calling generates (M)

Certain material now appearing on this page previously appeared on 1st Revised Page 2-7. Certain material previously appearing on this page now appears on 1st Revised Page 2-8.1.

All BellSouth marks contained herein and as set forth in the trademarks and servicemarks section of this Tariff are owned by BellSouth Intellectual Property Corporation.
****

ACCESS SERVICE

2 - General Regulations (Cont'd)

2.1 Undertaking of the Telephone Company (Cont'd)

2.1.11 Coordination with Respect to Network Contingencies (Cont'd)

problems on the Telephone Company's Common Transport network, the Telephone (M)
Company will work cooperatively with the customer to relieve the traffic (M)
congestion. Remedial measures may include isolation of the customer from the (M)
Telephone Company network in the impacted area for the duration of the problem (M)
or until the customer notifies the Telephone Company that the problem has been (M)
resolved. (M)

2.1.12 Provision and Ownership of Telephone Numbers (M)

The Telephone Company reserves the reasonable right to assign, designate or (M)
change telephone numbers, any other call number designations associated with (M)
Access Service, or the Telephone Company serving central office prefixes (M)
associated with such numbers, when necessary in the conduct of its business. (M)
Should it become necessary to make a change in such number(s), the Telephone (M)
Company will furnish to the customer 6 months notice, by certified U.S. Mail, (M)
of the effective date and an explanation of the reason(s) for such change(s). (M)

2.1.13 Metropolitan Statistical Area Access Services

For the Metropolitan Statistical Areas (MSAs) in which the Telephone Company has received Phase II pricing flexibility, pursuant to Subpart H of Part 69 of the Commission's Rules, Section 23 of this Tariff governs the offering of service in these MSAs. (T)

2.2 Use

2.2.1 Interference or Impairment

(A) The characteristics and methods of operation of any circuits, facilities or equipment provided by other than the Telephone Company and associated with the facilities utilized to provide services under this tariff shall not interfere with or impair service over any facilities of the Telephone Company, its affiliated companies, or its connecting and concurring carriers involved in its services, cause damage to their plant, impair the privacy of any communications carried over their facilities or create hazards to the employees of any of them or the public.

Certain material now appearing on this page previously appeared on 2nd Revised Page 2-8.

All BellSouth marks contained herein and as set forth in the trademarks and servicemarks section of this Tariff are owned by BellSouth Intellectual Property Corporation.
****

ACCESS SERVICE

2 - General Regulations (Cont'd)

2.2 Use (Cont'd)

2.2.1 Interference or Impairment (Cont'd)

(B) Except as provided for equipment or systems subject to the F.C.C. Part 68 Rules in 47 C.F.R. Section 68.108, if such characteristics or methods of operation are not in accordance with (A) preceding, the Telephone Company will, where practicable, notify the customer that temporary discontinuance of the use of a service may be required; however, where prior notice is not practicable, nothing contained herein shall be deemed to preclude the Telephone Company's right to temporarily discontinue forthwith the use of a service if such action is reasonable under the circumstances. In case of such temporary discontinuance, the customer will be promptly notified and afforded the opportunity to correct the condition which gave rise to the temporary discontinuance. During such period of temporary discontinuance, credit allowance for service interruptions as set forth in 2.4.4(A) and (B) following is not applicable.

2.2.2 Unlawful Use

The service provided under this tariff shall not be used for an unlawful purpose.

2.2.3 Commingling (N)

(A) Except as provided in Section 51.318 of the Federal Communications Commission's rules, telecommunications carriers who obtain unbundled network elements (UNEs) or combinations of UNEs pursuant to a Statement of Generally Available Terms, under Section 252 of the Act, or pursuant to an interconnection agreement with the Telephone Company, may connect, combine, or otherwise attach such UNEs or combinations of UNEs to Access services purchased under this Tariff except to the extent such agreement explicitly: (N)

(1) prohibits such commingling; or (N)

(2) requires the parties to complete the procedures set forth in the agreement regarding change of law prior to implementing such commingling. (N)

(B) The rates, terms, and conditions of this Tariff will apply to the Access Services that are commingled. (N)

(C) UNEs or combinations of UNEs that are commingled with Access Services are not included in the shared use provisions of this Tariff. (N)

(M)

Certain material previously appearing on this page now appears on Original Page 2-9.1.

****

ACCESS SERVICE

2 - General Regulations (Cont'd) (N)

2.3 Obligations of the Customer (M)

2.3.1 Damages (M)

The customer shall reimburse the Telephone Company for damages to Telephone (M)
Company facilities utilized to provide services under this tariff caused by (M)
the negligence or willful act of the customer, or resulting from the (M)
customer's improper use of the Telephone Company facilities, or due to (M)
malfunction of any facilities or equipment provided by other than the (M)
Telephone Company. Nothing in the foregoing provision shall be interpreted to (M)
hold one customer liable for another customer's actions. The Telephone (M)
Company will, upon reimbursement for damages, cooperate with the customer in (M)
prosecuting a claim against the person causing such damage and the customer (M)
shall be subrogated to the right of recovery by the Telephone Company for the (M)
damages to the extent of such payment. (M)

Certain material now appearing on this page previously appeared on Original Page 2-9.

****

ACCESS SERVICE

2 - General Regulations (Cont'd)

2.3 Obligations of the Customer (Cont'd)

2.3.2 Ownership of Facilities and Theft

Facilities utilized by the Telephone Company to provide service under the provisions of this tariff shall remain the property of the Telephone Company. Such facilities shall be returned to the Telephone Company by the customer, whenever requested, within a reasonable period following the request in as good condition as reasonable wear will permi.

2.3.3 Equipment Space and Power

The customer shall furnish or arrange to have furnished to the Telephone Company, at no charge, equipment space and electrical power required by the Telephone Company to provide services under this tariff at the points of termination of such services. The selection of ac or dc power shall be mutually agreed to by the customer and the Telephone Company. The customer shall also make necessary arrangements in order that the Telephone Company will have access to such spaces at reasonable times for installing, testing, repairing or removing Telephone Company services.

2.3.4 Availability for Testing

The services provided under this tariff shall be available to the Telephone Company at times mutually agreed upon in order to permit the Telephone Company to make tests and adjustments appropriate for maintaining the services in satisfactory operating condition. Such tests and adjustments shall be completed within a reasonable time. No credit will be allowed for any interruptions involved during such tests and adjustments.

2.3.5 Balance

All signals for transmission over the services provided under this tariff shall be delivered by the customer balanced to ground except for ground start, duplex (DX) and McCulloh-Loop (Alarm System) type signaling and dc telegraph transmission at speeds of 75 baud or less.

2.3.6 Design of Customer Services

Subject to the provisions of 2.1.7 preceding, the customer shall be solely responsible, at its own expense, for the overall design of its services and for any redesigning or rearrangement of its services which may be required because of changes in facilities, operations or

****

ACCESS SERVICE

2 - General Regulations (Cont'd)

2.3 Obligations of the Customer (Cont'd)

2.3.6 Design of Customer Services (Cont'd)

procedures of the Telephone Company, minimum protection criteria or operating or maintenance characteristics of the facilities.

2.3.7 References to the Telephone Company

The customer may, in response to direct customer inquiry, advise End Users (C)
that certain services are provided by the Telephone Company in connection with
the service the customer furnishes to End Users; however, the customer shall
not represent that the Telephone Company jointly participates in the
customer's services. Names of Telephone Company services and Service Marks or (N)
Trademarks owned by BellSouth Intellectual Property Corporation may not be (N)
used by any entity obtaining services pursuant to this tariff except under an (N)
express, written, license agreement with the Telephone Company or BellSouth (N)
Intellectual Property Marketing Corporation. (N)

2.3.8 Claims and Demands for Damages

(A) With respect to claims of patent infringement made by third persons, the customer shall defend, indemnify, protect and save harmless the Telephone Company from and against all claims arising out of the combining with, or use in connection with, the services provided under this tariff, any circuit, apparatus, system or method provided by the customer.

(B) The customer shall defend, indemnify and save harmless the Telephone Company from and against any suits, claims, losses or demands including punitive damages, attorney fees and court costs by third persons arising out of the construction, installation, operation, maintenance, or removal of the customer's circuits, facilities, or equipment connected to the Telephone Company's services provided under this tariff, including, without limitation, Workmen's Compensation claims, actions for infringement of copyright and/or unauthorized use of program material, libel and slander actions based on the content of communications transmitted over the customer's circuits, facilities or equipment, and proceedings to recover taxes, fines, or penalties for failure of the customer to obtain or maintain in effect any necessary certificates, permits, licenses, or other authority to acquire or operate the services provided under this tariff; provided, however, the foregoing indemnification shall not apply to suits, claims, and demands to recover damages for damage to property, death, or personal injury unless such suits, claims or demands are based on the tortious conduct of the customer, its officers, agents or employees.

****

2.3 Obligations of the Customer (Cont'd)

2.3.9 Coordination with Respect to Network Contingencies

The customer shall, in cooperation with the Telephone Company, coordinate in planning the actions to be taken to maintain maximum network capability following natural or man-made disasters, which affect telecommunications services.

2.3.10 Jurisdictional Report Requirements[1]

(A) Jurisdictional Reports

(1) Percent Interstate Usage (PIU)

(a) The interstate usage is to be developed as though every call that originates from a calling location (as designated by the calling station number) in a state other than that where the called station (as designated by the called number) is situated is an interstate communication. The manner in which a call is routed through the telecommunications network does not affect the jurisdiction of a call, i.e., a call between two points within the same state is an intrastate call even if it is routed through another state. (S)(X) (C)(Y) (C)(Y) (C)(Y) (C)(Y) (N)(Y) (N)(Y) (N)(Y)

(b) When the Telephone Company receives sufficient call detail to permit it to determine the jurisdiction of originating and terminating access minutes of use or message, the Telephone Company will bill according to these actual minutes of use and will not use customer reported Percent Interstate Usage (PIU) factors. (C)(Y)

The Telephone Company developed percent interstate usage for access minutes of use will be determined at a statewide level. The interstate percentage will be developed on a monthly basis by end office, when the access minutes are measured by dividing the measured interstate originating or terminating access minutes (the access minutes where the calling number is in one state and the called number is in another state) by the total originating or terminating access minutes.

Note 1: Except where indicated herein, references to BellSouth SWA FGs will also include the applicable BellSouth Basic Serving Arrangement as detailed in Section 6.1.3.(A)(5)(j) (e.g., the term BellSouth SWA FGA represents both BellSouth SWA FGA and BellSouth SWA LSBSA).

(X) Material filed under Transmittal Number 588 is scheduled to become effective May 15, 2001.

(Y) Transmittal Number 589 is scheduled to become effective on May 15, 2001 under the authority of Special Permission No. 01-035

****

ACCESS SERVICE

2 - General Regulations (Cont'd)

2.3 Obligations of the Customer (Cont'd)

2.3.10 Jurisdictional Report Requirements[1] (Cont'd)

(A) Jurisdictional Reports (Cont'd)

(1) Percent Interstate Usage (PIU) (Cont'd)

(b) (Cont'd)

The Telephone Company will bill according to actual measured minutes of use or messages for all services listed in (1)(c) and (2) following, with the exception of those listed below:

- BellSouth SWA Local Channel
- BellSouth SWA Dedicated Interoffice Channel
- BellSouth Billing Name and Address
- BellSouth Inward Operator Service
- BellSouth Line Information Data Base Service (LIDB)
- Virtual Access Cross Connect Service (T)
- Physical Access Cross Connect Service (N)
- Intra-Office Collocation Cross Connect Service (N)
- BellSouth Electronic White Pages Access Service
- BellSouth Operator Assistance Access Service
- BellSouth Flat Rated DA Trunk
- Channelization Equipment
- DNALs associated with BellSouth SWA LSBSA
- Public Packet Switching Network (PPSN)

Where the Telephone Company receives insufficient call detail to determine the jurisdiction, the Telephone Company will apply the customer's projected PIU factor to apportion the usage between interstate and intrastate. In the event the customer does not supply the projected PIU and the Telephone Company does not have sufficient call detail to determine the jurisdiction of the call, only then will a PIU of 50 percent be applied. For the purpose of this tariff, where the customer is a Third-Party Provider ("Third-Party Provider") of CCS7 services to its customers ("Third-Party Customers"), the Third-Party Provider will develop its projected PIU factor based upon a weighted average of the PIUs of its Third-Party Customers' end user traffic in accordance with the procedures described below. A Third-Party Provider may elect to have the (M)

Note 1: Except where indicated herein, references to BellSouth SWA FGs will also include the applicable BellSouth Basic Serving Arrangement as detailed in Section 6.1.3.(A)(5)(j) (e.g., the term BellSouth SWA FGA represents both BellSouth SWA FGA and BellSouth SWA LSBSA).

Certain material previously appearing on this page now appears on 5th Revised Page 2-12.0.2.

All BellSouth marks contained herein and as set forth in the trademarks and servicemarks section of this Tariff are owned by BellSouth Intellectual Property Corporation.
****

ACCESS SERVICE

2 - General Regulations (Cont'd)

2.3 Obligations of the Customer (Cont'd)

2.3.10 Jurisdictional Report Requirements[1] (Cont'd)

(A) Jurisdictional Reports (Cont'd)

(1) Percent Interstate Usage (PIU) (Cont'd)

(b) (Cont'd)

Telephone Company determine the weighted PIU and in so doing the Third-Party Provider shall name and identify their Third Party Customers. In the event a Third Party Provider does not provide a projected PIU or does not elect to have the Telephone Company determine the PIU, a 50 percent PIU will be utilized for that Third-Party Provider, until such time as the Telephone Company obtains sufficient data to develop the PIU as specified in c. following. (M)

The customer will provide in its initial order the projected Percent Interstate Usage (PIU) at a statewide level on a local exchange company specific basis. When the customer computes the PIU it will subtract the developed PIU from 100 and the difference is the percent intrastate usage. The sum of the interstate and intrastate percentages will equal 100 percent. A PIU of less than 100 percent is not allowed where the interstate service is not also available in the appropriate intrastate access tariff. The projected PIU may include up to two decimals.

The Telephone Company will designate the number obtained by subtracting the projected interstate percentage furnished by the customer from 100 (100 – customer percentage = intrastate percentage) as the projected intrastate percentage of use.

For usage originating from or terminating to an end office that is located in a state that is part of a LATA of a different state (cross boundary), the customer will provide a statewide PIU per service type for the state where the end office is physically located.

(c) When the customer initially orders service(s), as defined in the following, the customer will state in its order the Percent Interstate Usage separately for each, as set forth in (1)(a) and (1)(b) preceding.

Note 1: Except where indicated herein, references to BellSouth SWA FGs will also include the applicable BellSouth Basic Serving Arrangement as detailed in Section 6.1.3.(A)(5)(j) (e.g., the term BellSouth SWA FGA represents both BellSouth SWA FGA and BellSouth SWA LSBSA).

Certain material now appearing on this page previously appeared on 7th Revised Page 2-12.0.1.

All BellSouth marks contained herein and as set forth in the trademarks and servicemarks section of this Tariff are owned by BellSouth Intellectual Property Corporation.
****

2.3 Obligations of the Customer (Cont'd)

2.3.10 Jurisdictional Report Requirements[1] (Cont'd)

(A) Jurisdictional Reports (Cont'd)

(1) Percent Interstate Usage (PIU) (Cont'd)

(c) (Cont'd)

- BellSouth SWA FGA
- BellSouth SWA FGB
- BellSouth SWA FGD
- BellSouth SWA 500
- 700 Service Access
- BellSouth SWA 8XX Toll Free Dialing Ten Digit Screening Service
- BellSouth SWA 900
- BellSouth SWA Local Channel
- BellSouth SWA Dedicated Interoffice Channel
- BellSouth CCS7 Access Arrangement
- Channelization Equipment
- DNALs associated with BellSouth SWA LSBSA[2]
- Virtual Access Cross Connect Service (T)
- Physical Access Cross Connect Service (N)
- Intra-Office Collocation Cross Connect Service (N)
- BellSouth Billing Name and Address
- BellSouth Inward Operator Services
- BellSouth Line Information Data Base Service (LIDB)
- BellSouth Electronic White Pages Access Service
- BellSouth Operator Assistance Access Service
- BellSouth Flat Rated DA Trunks
- Public Packet Switching Network (PPSN)
- BellSouth IPTG Terminating Service

The Percent Interstate Usage (PIU) factors associated with BellSouth SWA FGA, BellSouth SWA FGB, BellSouth SWA FGD, BellSouth SWA 500, 700, BellSouth SWA 8XX Toll Free Dialing Ten Digit Screening service, and BellSouth SWA 900, will apply to all associated elements and services, e.g., Carrier Common Line, Local Switching, BellSouth SWA Common Interoffice Channel, Interconnection, Access Tandem Switching, Common Trunk Port service and minute of use based multiplexer rate elements, where applicable.

Note 1: Except where indicated herein, references to BellSouth SWA FGs will also include the applicable BellSouth SWA Basic Serving Arrangement as detailed in Section 6.1.3.(A)(5)(j) (e.g., the term BellSouth SWA FGA represents both BellSouth SWA FGA and BellSouth SWA LSBSA).

Note 2: Where BellSouth SWA LSBSA is provisioned with a DNAL, the DNAL rates should be apportioned between interstate and intrastate using the same PIU factor as is applied to the associated BellSouth SWA LSBSA.

All BellSouth marks contained herein and as set forth in the trademarks and servicemarks section of this Tariff are owned by BellSouth Intellectual Property Corporation.
****

ACCESS SERVICE

2 - General Regulations (Cont'd)

2.3 Obligations of the Customer (Cont'd)

2.3.10 Jurisdictional Report Requirements[1] (Cont'd)

(A) Jurisdictional Reports (Cont'd)

(1) Percent Interstate Usage (PIU) (Cont'd)

(c) (Cont'd)

The customer will provide a single factor as the projected Percent Interstate Usage (PIU) to apportion the usage between interstate and intrastate. This factor will be applied to the following categories:

- BellSouth SWA Local Channel
- BellSouth SWA Dedicated Interoffice Channel
- Channelization Equipment

The PIU category, BellSouth SWA Local Channel, includes Dedicated End Office Trunk Port Service and Dedicated Tandem Trunk Port Service charges and other flat rated charges not specifically covered by other PIU categories.

The PIU factor provided for each of the foregoing facilities categories (Switched Local Channel, Switched Dedicated Interoffice Channel, Channelization Equipment and Switched Virtual and Physical (T)
Access Cross Connect Service) will reflect the combination of all (T)
traffic types which traverse such facility category.

Note 1: Except where indicated herein, references to BellSouth SWA FGs will also include the applicable BellSouth Basic Serving Arrangement as detailed in Section 6.1.3.(A)(5)(j) (e.g., the term BellSouth SWA FGA represents both BellSouth SWA FGA and BellSouth SWA LSBSA).

All BellSouth marks contained herein and as set forth in the trademarks and servicemarks section of this Tariff are owned by BellSouth Intellectual Property Corporation.
****

ACCESS SERVICE
2 - General Regulations (Cont'd)

2.3 Obligations of the Customer (Cont'd)

2.3.10 Jurisdictional Report Requirements[1] (Cont'd)

(A) Jurisdictional Reports (Cont'd)

(1) Percent Interstate Usage (PIU) (Cont'd)

(c) (Cont'd) (T)

When Special Access (a.k.a. BellSouth SPA) service is provided on a BellSouth SWA Access Facility, e.g. Special Access (a.k.a. BellSouth SPA) DS1 on a BellSouth SWA DS3, the facility will be apportioned between BellSouth SWA and Special Access (a.k.a. BellSouth SPA). The jurisdiction of the Special Access (a.k.a. BellSouth SPA) service will reflect the composite of the jurisdiction of the lower capacity services, if any, of which it is comprised, and the regulations in 2.3.12, following, will apply. (C)

The customer will compute the PIU using the following formula (rounded to a whole percentage). (C)

$$\frac{\text{Total Interstate Originating Minutes} + \text{Total Interstate Terminating Minutes}}{\text{Total Originating Minutes} + \text{Total Terminating Minutes}}$$

When a customer orders a Public Packet Switching Network (PPSN) Interface Arrangement from Section 7 following, the customer shall state in its order the projected percentage of interstate packet usage that will be completed through the PPSN.

The projected interstate percentages for package usage traversing (M)
the Special Access (a.k.a. BellSouth SPA PPSN Interfaces will be (M)
used to apportion packet usage billed per 7.2.3(D)(11)(d) and (M)
7.2.8(D)(3)(d) between interstate and intrastate jurisdictions (M)
until a revised report is received as set forth in (3) following. (C)

Note 1: Except where indicated herein, references to BellSouth SWA FGs will also include the applicable BellSouth SWA Basic Serving Arrangement, as detailed in Section 6.1.3(A)(5)(j) (e.g., the term BellSouth SWA FGA represents both BellSouth SWA FGA and BellSouth SWA LSBSA).

Certain material appearing on this page previously appeared on 8th Revised Page 2-14.

****

ACCESS SERVICE

2 - General Regulations (Cont'd)

(D)(x)

(D)(x)

(D)(x)

(D)(x)

(D)(x)
(D)(x)
(D)(x)
(D)(x)

(D)(x)
(D)(x)
(D)(x)

(D)(x)
(D)(x)
(D)(x)

(D)(x)
(D)(x)
(D)(x)
(D)(x)
(D)(x)
(D)(x)
(D)(x)
(D)(x)

(D)(x)
(D)(x)
(D)(x)
(D)(x)

Certain material previously appearing on this page now appears on Original Page 2-12.2.

(x) Filed in compliance with F.C.C. Report and Order Released October 16, 1992 and F.C.C. First Memorandum Opinion and Order Released July 21, 1993, CC Docket 91-213.

****

ACCESS SERVICE

2 - General Regulations (Cont'd)

(D)

(D)

(D)

(D)

(M)
(M)
(M)
(M)
(M)
(M)
(M)
(M)
(M)

(D)
(D)
(D)

(D)
(D)
(D)
(D)
(D)

(D)
(D)
(D)
(D)
(D)

(D)
(D)
(D)
(D)
(D)
(D)

(D)
(D)
(D)
(D)

Certain material previously appearing on this page now appears on Original Page 2-12.0.2.

Certain material previously appearing on this page now appears on 8th Revised Page 2-13.

****

ACCESS SERVICE

2 - General Regulations (Cont'd)

(D)

(D)

(D)

(D)
(D)
(D)
(D)
(D)
(D)
(D)
(M)
(M)
(D)
(D)
(M)
(M)
(D)
(M)
(D)
(D)
(D)
(D)
(D)
(D)
(D)

(D)
(D)
(D)
(D)

Certain material previously appearing on this page now appears on Original Page 2-12.

****

(D)

(D)

(D)

(D)

(M)
(M)
(M)
(D)
(D)
(D)
(D)
(D)
(D)
(D)
(D)
(M)
(M)
(M)
(M)

(M)
(M)
(M)
(M)
(D)
(D)
(D)
(D)
(D)
(D)
(D)

(D)
(D)
(D)
(D)

Certain material previously appearing on this page now appears on Original Page 2-12.0.2.

****

ACCESS SERVICE

2 - General Regulations (Cont'd)

2.3 Obligations of the Customer (Cont'd)

2.3.10 Jurisdictional Report Requirements[1] (Cont'd)

(A) Jurisdictional Reports (Cont'd)

(2) For BellSouth Directory Assistance Access Service and BellSouth Direct Access to Directory Assistance Service, the Telephone Company developed PIU for BellSouth SWA FGD terminating will apply. For BellSouth Electronic White Pages Access service, the customer's projected interstate percent usage (PIU) will be applied.

(3) For BellSouth Operator Assistance Access Service and BellSouth Flat Rated DA Trunks, the customer must state in its order the PIU anticipated as specified in 2.3.10(A)(1)(c) preceding. The customer may only report a PIU of less than 100%, where the service is also available for intrastate use. Subsequent PIU factors will be reported as required in (5) following. (C) (N) (N) (N) (N) (N)

(4) For BellSouth CCS7 Access Arrangement, the customer must state in its order the PIU anticipated as specified in 2.3.10(A)(1)(c) preceding. The PIU reported will then be applied to the rates for Signaling Connections and Terminations to arrive at the amount the customer is billed for interstate usage of these facilities each month. (C) (N) (N) (N) (N) (N) (N) (M) (M) (M) (M) (M) (M) (M) (M) (M) (M) (M) (M) (M) (M) (M) (M) (M) (M) (M) (M) (M) (M)

Note 1: Except where indicated herein, references to BellSouth SWA FGs will also include the applicable BellSouth SWA Basic Serving Arrangement as detailed in Section 6.1.3(A)(5)(j) (e.g., the term BellSouth SWA FGA represents both BellSouth SWA FGA and BellSouth SWA LSBSA).

Certain material previously appearing on this page now appears on Original Page 2-16.1.

****

ACCESS SERVICE (N)

2 - General Regulations (Cont'd) (N)

2.3 Obligations of the Customer (Cont'd) (N)

2.3.10 Jurisdictional Report Requirements[1] (Cont'd) (N)

(A) Jurisdictional Reports (Cont'd) (N)

(4) (Cont'd) (N)
In addition, the PIU will be applied to the total messages and the resulting figure multiplied by the appropriate rate per message to determine the amount that the customer will be billed for interstate usage. Subsequent PIU factors will be reported as required in (5) following. (N)

(5) Effective July 1, 2001 the customer will update the jurisdictional report associated with BellSouth Operator Assistance Access Service, BellSouth Flat Rated DA Trunks and BellSouth CCS7 Access Arrangement, when both interstate and intrastate service is provided. (N)

Effective October 1, 2000, the customer will provide a single factor as the projected Percent Interstate Usage (PIU) to apportion the usage between interstate and intrastate. This PIU factor will apply to the following categories: BellSouth SWA Local Channel, BellSouth SWA Dedicated Interoffice Channel and Channelization Equipment. (M)

Effective July 1, 2000, the customer's projected Percent Interstate Usage (PIU) will be provided at a statewide level on a local exchange company basis. (M)

Effective on the first of January, April, July and October of each year the customer will update the interstate and intrastate jurisdictional report, except where Telephone Company Measured Access minutes are used as set forth in (1) preceding. The customer will forward to the Telephone Company, to be received no later than 30 days after the first of each such month, a revised report or letter for all services showing the interstate and intrastate percentage of use for the past three months ending the last day of December, March, June and September, respectively, for each service arranged for interstate use. (M)

Note 1: Except where indicated herein, references to BellSouth SWA FGs will also include the applicable BellSouth SWA Basic Serving Arrangement as detailed in Section 6.1.3(A)(5)(j) (e.g., the term BellSouth SWA FGA represents both BellSouth SWA FGA and BellSouth SWA LSBSA). (N)

Certain material appearing on this page previously appeared on 15th Revised Page 2-16.

****

ACCESS SERVICE

2 - General Regulations (Cont'd)

2.3 Obligations of the Customer (Cont'd)

2.3.10 Jurisdictional Report Requirements[1] (Cont'd)

(A) Jurisdictional Reports (Cont'd)

(5) (Cont'd) (S)(X)

The revised report or letter will serve as the basis for the next three months' billing and will be effective on the bill date for that service. If the customer does not supply an updated quarterly report or letter, the Telephone Company will assume percentages to be the same as those provided in the last quarterly report or letter accepted by the Telephone Company. If an audit has been completed and an updated quarterly report or letter has not been submitted subsequent to the audit, the Telephone Company will assume the PIU factors to be the most recent audited results. For those cases in which a quarterly report or letter has never been received from the customer, the Telephone Company will assume the PIU factors to be the most recent audit results, to be the same as provided in the order for service if no audit has been performed, or 50 percent.

(B) Jurisdictional Report Verification

(1) When a customer provides a projected interstate usage percent as set forth in (A) preceding, or when a billing dispute arises or a regulatory commission questions the projected interstate percentage for Access, the Telephone Company may, by written request, require the customer to provide the data the customer used to determine the projected interstate percentage. In the case of a third-party (C)(Y)
provider of CCS7 service to Third-Party Customers as described in (N)(Y)
(A), preceding, the data will include the data provided by the Third- (N)(Y)
Party Customers. This written request will be considered the (C)(Y)
initiation of the audit. The customer shall supply the data to an independent auditor or the Telephone Company within 30 days of the Telephone Company request. The customer shall keep records of call detail from which the percentage of interstate and intrastate use can be ascertained as set forth in (C) following and upon request of the Telephone Company make the records available for inspection at an agreed upon location during normal business hours as reasonably necessary for purposes of verification of the percentages. The Telephone Company will audit data from one quarter unless a longer period is requested by the customer and agreed to by the Telephone Company.

Note 1: Except where indicated herein, references to BellSouth SWA FGs will also include the applicable BellSouth SWA Basic Serving Arrangement as detailed in Section 6.1.3(A)(5)(j) (e.g., the term BellSouth SWA FGA represents both BellSouth SWA FGA and BellSouth SWA LSBSA).

(X) Material filed under Transmittal Number 588 is scheduled to become effective on May 15, 2001.

(Y) Transmittal Number 589 is scheduled to become effective on May 15, 2001 under the authority of Special Permission No. 01-035.

****

ACCESS SERVICE

2 - General Regulations (Cont'd)

2.3 Obligations of the Customer (Cont'd)

2.3.10 Jurisdictional Report Requirements[1] (Cont'd)

(B) Jurisdictional Report Verification (Cont'd)

(1) (Cont'd)

Changes to the reported PIU will not be made for the test period. If the customer does not provide the requested data to the Telephone Company or independent auditor within thirty (30) days of the notice of audit, the customer will be in violation of this Tariff and subject to 2.1.8 preceding.

(2) For BellSouth SWA service, verification audits may be conducted no more frequently than once per year except in extreme circumstances. The Telephone Company and customer will attempt to limit the audit to a reasonable time to effectively complete the audit. The Telephone Company and customer shall respond promptly to requests generated during the audit to ensure timely completion of the audit. (T)

(3) Audits may be conducted by: (a) an independent auditor under contract to the Telephone Company; (b) a mutually agreed upon independent auditor; or (c) an independent auditor selected and paid for by the customer. If the customer selects option (c), where it pays for its own independent audit, the selected auditor must certify that the audit was performed following F.C.C. procedures for measuring interstate traffic as established by Commission Order, and provide to the Telephone Company a report with supporting documentation to verify such procedures.

Note 1: Except where indicated herein, references to BellSouth SWA FGs will also include the applicable BellSouth SWA Basic Serving Arrangement as detailed in Section 6.1.3(A)(5)(j) (e.g., the term BellSouth SWA FGA represents both BellSouth SWA FGA and BellSouth SWA LSBSA). (T) (T) (T) (T)

****

ACCESS SERVICE

2 - General Regulations (Cont'd)

2.3 Obligations of the Customer (Cont'd)

2.3.10 Jurisdictional Report Requirements[1] (Cont'd)

(B) Jurisdictional Report Verification (Cont'd)

(4) If a billing dispute arises or a regulatory commission questions the projected interstate percentage for Special Access (a.k.a. BellSouth SPA) service, the Telephone Company will ask the customer to provide the data the customer used to determine the projected interstate percentage. The customer shall supply the data within 30 days of the Telephone Company request. The customer shall keep records from which the percentage was determined and upon request of the Telephone Company make the records available for inspection as reasonably necessary for purposes of verification of the percentages. (T) (T)

(C) Maintenance of Customer Records for BellSouth SWA (T)

(1) The customer shall retain for a minimum of six (6) months call detail records that substantiate the interstate percent provided to the Telephone Company as set forth in (A) preceding for BellSouth SWA service. Such records shall consist of (a) and (b), if applicable, following: (T) (T)

(a) All call detail records such as workpapers and/or backup documentation including paper, magnetic tapes or any other form of records for billed customer traffic, call information including call terminating address (i.e., called number), the call duration, all originating and terminating trunk groupsor access lines over which the call is routed, and the point at which the call enters the customer's network and;

(b) If the customer has a mechanized system in place that calculated the PIU, then a description of that system and the methodology used to calculate the PIU must be furnished and any other pertinent information (such as but not limited to flowcharts, source code, etc.) relating to such system must also be made available.

Note 1: Except where indicated herein, references to BellSouth SWA FGs will also include the applicable BellSouth SWA Basic Serving Arrangement as detailed in Section 6.1.3(A)(5)(j) (e.g., the term BellSouth SWA FGA represents both BellSouth SWA FGA and BellSouth SWA LSBSA). (T) (T) (T) (T)

****

ACCESS SERVICE

2 - General Regulations (Cont'd)

2.3 Obligations of the Customer (Cont'd)

2.3.10 Jurisdictional Report Requirements[1] (Cont'd)

(D) Audit Results for BellSouth SWA (T)

(1) Audit results will be furnished to the customer via Certified U.S. Mail (return receipt requested). The Telephone Company will adjust the customer's PIU based upon the audit results. The PIU resulting from the audit shall be applied to the usage for the quarter the audit is completed, the usage for the quarter prior to completion of the audit, and the usage for the two (2) quarters following the completion of the audit. After that time, the customer may report a revised PIU pursuant to (A) preceding. If the revised PIU submitted by the customer represents a deviation of 5 percentage points or more, from the audited PIU, and that deviation is not due to identifiable reasons, the provisions in (B) preceding may be applied. (T)

(2) Both credit and debit adjustments will be made to the customer's interstate access charges for the specified period to accurately reflect the interstate usage for the customer's account consistent with Section 2.4.1 following.

(3) If, as a result of an audit conducted by an independent auditor, a customer is found to have over-stated the PIU by 20 percentage points or more, the Telephone Company shall require reimbursement from the customer for the cost of the audit. Such bill(s) shall be due and paid in immediately available funds 30 days from receipt and shall carry a late payment penalty as set forth in Section 2.4.1 following if not paid within the 30 days.

Note 1: Except where indicated herein, references to BellSouth SWA FGs will also include the applicable BellSouth SWA Basic Serving Arrangement as detailed in Section 6.1.3(A)(5)(j) (e.g., the term BellSouth SWA FGA represents both BellSouth SWA FGA and BellSouth SWA LSBSA). (T) (T) (T) (T)

****

ACCESS SERVICE

2 - General Regulations (Cont'd)

2.3 Obligations of the Customer (Cont'd)

2.3.10 Jurisdictional Report Requirements[1] (Cont'd)

(E) Contested Audits

(1) When a PIU audit is conducted by an independent auditor selected by the Telephone Company, the audit results will be furnished to the customer by Certified U.S. Mail (return receipt requested). The customer may contest the audit results based on substantive cause by providing written notification, by Certified U.S. Mail (return receipt requested), to the Telephone Company within thirty (30) calendar days from the date the audit report is furnished to the customer. When a PIU audit is conducted by an independent auditor selected by the customer, the audit results will be furnished to the Telephone Company by Certified U.S. Mail (return receipt requested). The Telephone Company may contest the audit results by providing written notification, by Certified U.S. Mail (return receipt requested), to the customer within thirty (30) calendar days from the date the audit report is furnished to the Telephone Company.

(2) Contested audits may be resolved by a neutral arbitrator mutually agreed upon by the Telephone Company and the customer. Arbitration is an option provided in addition to the customer's existing right to file a complaint or legal action in a court of law or at the FCC for resolution of the dispute. The arbitration hearing will be conducted in a state or location within the Telephone Company operating territory where the customer maintains a principle or significant presence or a state and location within the Telephone Company operating territory that is mutually agreed upon by both parties. The arbitration proceeding shall be governed by the law (both statutory and case) of the state in which the arbitration hearing is held, including, but not limited to, the Uniform Arbitration Act, as adopted in that state. The arbitrator shall determine the customer's PIU based on (A) preceding.

Note 1: Except where indicated herein, references to BellSouth SWA FGs will (T)
also include the applicable BellSouth SWA Basic Serving Arrangement (T)
as detailed in Section 6.1.3(A)(5)(j) (e.g., the term BellSouth SWA (T)
FGA represents both BellSouth SWA FGA and BellSouth SWA LSBSA). (T)

****

ACCESS SERVICE

2 - General Regulations (Cont'd)

2.3 Obligations of the Customer (Cont'd)

2.3.10 Jurisdictional Report Requirements[1] (Cont'd)

(E) Contested Audits (Cont'd)

(3) Prior to the arbitration hearing, each party shall notify the arbitrator of the PIU percentage which that party believes to be correct. The arbitrator, in deciding, may adopt the PIU percentage of either party or may adopt a PIU percentage different from those proposed by the parties. If the arbitrator adopts a PIU percentage proposed by one of the parties, the other party (whose PIU percentage was not adopted) shall pay all costs of the arbitration. If the arbitrator adopts a PIU percentage higher than either of the PIU percentages proposed by the parties, then the party proposing the lower PIU percentage shall pay all costs of the arbitration. If the arbitrator adopts a PIU percentage lower than either of the PIU percentages proposed by the parties, then the party proposing the higher PIU percentage shall pay all costs of the arbitration. If the arbitrator adopts a PIU percentage which falls between the two percentages adopted by the parties, then the parties shalleach pay one-half of the arbitration costs.

(4) Absent written notification, within the timeframe noted above, the customer must comply with the provisions set forth in (D) preceding. If the customer fails to comply with these provisions, the Telephone Company may refuse additional applications for service and/or refuse to complete any and all pending orders for service or may discontinue the provision of the services to the customer as specified in 2.1.8 preceding.

(D)
(D)

Note 1: Except where indicated herein, references to BellSouth SWA FGs will also include the applicable BellSouth SWA Basic Serving Arrangement as detailed in Section 6.1.3(A)(5)(j) (e.g., the term BellSouth SWA FGA represents both BellSouth SWA FGA and BellSouth SWA LSBSA).

****

2.3 Obligations of the Customer (Cont'd)

2.3.11 Determination of Interstate Charges for Mixed Interstate and Intrastate BellSouth SWA Access Service and for PPSN Packet Usage (T)

When mixed interstate and intrastate BellSouth SWA Service or PPSN packet usage, as described in 2.3.10(A)(1)(b) preceding, is provided, all charges (i.e., nonrecurring, monthly and/or usage) including optional feature charges, will be prorated between interstate and intrastate. The percentage provided in the reports as set forth in 2.3.10(A) preceding will serve as the basis for prorating the charges. The percentage of a BellSouth SWA Service or PPSN packet usage to be charged as interstateis applied in the following manner: (T) (T)

(A) For monthly and nonrecurring chargeable rate elements multiply the percent interstate use times the quantity of chargeable elements times the stated tariff rate per element.

(B) For usage sensitive (i.e., access minutes and calls) chargeable rate elements, multiply the percent interstate use times actual use (i.e., measured or Telephone Company assumed average use) times the stated tariff rate.

(x) Filed in compliance with F.C.C. Report and Order Released October 16, 1992 and F.C.C. First Memorandum Opinion and Order Released July 21, 1993, CC Docket 91-213.

****

ACCESS SERVICE

2 - General Regulations (Cont'd)

2.3 Obligations of the Customer (Cont'd)

2.3.11 Determination of Interstate Charges for Mixed Interstate and Intrastate BellSouth SWA and for PPSN Packet Usage (Cont'd) (T)

(B)(Cont'd)

The interstate percentage will change as revised jurisdictional reports are submitted or as lines or trunks are added or removed as set forth in 2.3.10 preceding.

2.3.12 Determination of Jurisdiction of Mixed Interstate and Intrastate Special Access (a.k.a. BellSouth SPA) Service (T)

Except for PPSN packet usage as described in 2.3.10(A)(1)(b) preceding, when mixed interstate and intrastate Special Access (a.k.a. (T)
BellSouth SPA) service is provided, the jurisdiction will be (T)
determined as follows:

- If the customer's estimate of the interstate traffic on the service involved constitutes 10% or less of the total traffic on that service, the service will be provided in accordance with the applicable rules and regulations of the appropriate intrastate tariff.

- If the customer's estimate of the interstate traffic on the service involved constitutes more than 10% of the total traffic on that service, the service will be provided in accordance with the applicable rules and regulations of this Tariff.

- The Telephone Company will notify its Special Access (a.k.a. (T)
BellSouth SPA) customers via letters or bill inserts of this (T)
jurisdictional rule change pursuant to FCC Decision and Order released on July 20, 1989 in CC Docket Nos. 78-72 and 80-286. By this notification, customers will be requested to review their existing and ordered services to certify the jurisdiction for their services. Customer requests to change jurisdictions received by the Telephone Company on or before May 15, 1990 will become effective on May 15, 1990. Customer requests to change jurisdictions received by the Telephone Company after May 15, 1990 will become effective on the date received.

****

2.3 Obligations of the Customer (Cont'd)

2.3.12 Determination of Jurisdiction of Mixed Interstate and Intrastate Special Access (a.k.a. BellSouth SPA) Service (Cont'd) (S)

- Pursuant to FCC Decision and Order released on July 20, 1989 in CC Docket Nos. 78-72 and 80-286, customers may be required to change jurisdiction for certain Special Access (a.k.a. BellSouth SPA) (S) services which have a termination liability. Because of the nature of the change in jurisdiction, the Telephone Company will waive application of the termination liability for a period of 90 days beginning May 15, 1990. The termination liability will be transferred with the jurisdictional change of the service.

2.3.13 Sectionalization - Trouble Reporting

The customer will be responsible for reporting troubles, sectionalized to Telephone Company facilities and/or equipment. When troubles cannot be clearly sectionalized to the Telephone Company facilities and/or equipment, the Telephone Company will test cooperatively or independently to assist in trouble sectionalization.

Responsibility for payment of additional charges will apply as set forth in Section 13.

2.3.14 Toll Free Dialing Number Reporting

For BellSouth SWA 8XX Toll Free Dialing Access Ten Digit Screening Service the (S) customer will be responsible for reporting to the Telephone Company or directly to the Service Management System BellSouth SWA Toll Free Dialing (S) numbers (800, 888, etc), hereinafter toll free dialing numbers, that are in service in the Telephone Company serving area and the activation date of every toll free dialing number assigned.

(D)(x)
(D)(x)
(D)(x)
(D)(x)
(D)(x)
(D)(x)

2.3.15 Utilization of Alternative Access Providers

When the customer of record for an access service utilizes the service(s) of an alternative access provider, it will be the obligation of the customer to monitor the actions of the alternative access provider to insure that the customer's desired service interconnections and grades of service are maintained.

(x) Filed under the authority of CC Docket No. 93-129, In the Matter of 800 Data Base Access Tariffs and the 800 Service Management System Tariff and CC Docket 86-10, Provision of 800 Services, released October 28, 1996.

(S) Originally filed under Transmittal No. 377 and subsequently deferred under Transmittal No. 387 until January 15, 1997.

****

ACCESS SERVICE

2 - General Regulations (Cont'd)

2.4 Payment Arrangements and Credit Allowances

2.4.1 Payment of Rates, Charges and Deposits

(A) The Telephone Company will, in order to safeguard its interests, only require a customer which has a proven history of late payments to the Telephone Company or does not have established credit to make a deposit prior to or at any time after the provision of a service to the customer to be held by the Telephone Company as a guarantee of the payment of rates and charges.

(T)
The Telephone Company will notify the customer of a deposit requirement (N)
by Certified Mail or Overnight Delivery. The customer will be required (N)
to make payment of such deposit prior to the provision of new service in (N)
those cases where the customer has not established credit with the (N)
Telephone Company, or otherwise within fifteen (15) business days of (N)
such notice for customers with existing services. Such notice period (N)
will start the day after the notice is rendered by Certified Mail or (N)
Overnight Delivery. (N)

No such deposit will be required of a customer which is a successor of a company which has established credit and has no history of late payments to the Telephone Company. Such deposit may not exceed the actual or estimated rates and charges for the service for a two month period. The fact that a deposit has been made in no way relieves the customer from complying with the Telephone Company's regulations as to the prompt payment of bills. At such time as the provision of the service to the customer is terminated, the amount of the deposit will be credited to the customer's account and any credit balance which may remain will be refunded.

Such a deposit will be refunded or credited to the customer's account when the customer has established credit or, in any event, after the customer has established a one-year prompt payment record at any time prior to the termination of the provision of the service to the customer. In the case of a cash deposit, for the period the deposit is held by the Telephone Company, the customer will receive simple interest at the rate of 1% per month (.000329 per day) or 12% annually. The rate will be calculated from the date the customer's deposit is received by the Telephone Company up to and including the date such deposit is credited to the customer's account or the date the deposit is refunded by the Telephone Company. Should a deposit be credited to the customer's account, as indicated above, no interest will accrue on the deposit from the date such deposit is credited to the customer's account.

(B) The Telephone Company shall bill on a current basis all charges incurred by and credits due to the customer under this tariff attributable to services, including, but not limited to maintenance of service as set forth in 13.3.1 following established or discontinued during the preceding billing period. In addition, the Telephone Company shall bill in advance charges for all services to be provided during the ensuing billing period except for charges associated with service usage and for the Federal Government which will be billed in arrears.

All BellSouth marks contained herein and as set forth in the trademarks and servicemarks section of this Tariff are owned by BellSouth Intellectual Property Corporation.
****

2.4 Payment Arrangements and Credit Allowances (Cont'd)

2.4.1 Payment of Rates, Charges and Deposits (Cont'd)

(x) Issued under authority of Special Permission No. 02-153 of the F.C.C. in order to restore currently effective provisions and to withdraw material filed under Transmittal No. 657 without becoming effective.

****

(x) Issued under authority of Special Permission 02-153 of the F.C.C. in order to withdraw material filed under Transmittal No. 657 without becoming effective.

****

(x) Issued under authority of Special Permission 02-153 of the F.C.C. in order to withdraw material filed under Transmittal No. 657 without becoming effective.

****

2.4 Payment Arrangements and Credit Allowances (Cont'd)

2.4.1 Payment of Rates, Charges and Deposits (Cont'd)

(B) (Cont'd)

The bill day (i.e., the billing date of a bill for a customer for Access Service under this tariff), the period of service each bill covers and the payment due date will be as follows:

(1) For End User Access Service and Federal Universal Service (FUS) charges as set forth in Section 4 following, and BellSouth Equal Access Subscription Service as set forth in Section 13 following, the Telephone Company will establish a bill day each month for each end user account. The bill will cover End User Access Service charges for the ensuing billing period except for End User Access Service for the Federal Government, which will be billed in arrears. Any applicable subscription charges, any known unbilled charges for prior periods and any known unbilled adjustments for prior periods for End User Access Service and BellSouth Equal Access Subscription Service will be applied to this bill. Such bills are due when rendered. (C) (C) (C)

(2) For End User Access Service and Federal Universal Service charges, and BellSouth Equal Access Subscription Service, the Telephone Company will establish a bill day each month for each customer account. The bill will cover non-usage sensitive service charges for the ensuing billing period or which the bill is rendered, any known unbilled non-usage sensitive charges for prior periods and unbilled usage charges for the period after the last bill day through the current bill day. Any known unbilled usage charges for prior periods and any known unbilled adjustments will be applied to this bill. Payment for such bills is due as set forth in (3) following. If payment is not received by the payment due date, as set forth in (3) following in immediately available funds, a late payment penalty will apply as set forth in (3) following. (C)

All BellSouth marks contained herein and as set forth in the trademarks and servicemarks section of this Tariff are owned by BellSouth Intellectual Property Corporation.
****

ACCESS SERVICE

2 - General Regulations (Cont'd)

2.4 Payment Arrangements and Credit Allowances (Cont'd)

2.4.1 Payment of Rates, Charges and Deposits (Cont'd)

(B) (Cont'd)

(3) Payment Due Date

(a) All bills dated as set forth in (2) preceding for service, other than End User Access Service and BellSouth Equal Access Subscription Service, provided to the customer by the Telephone Company are due on the payment due date. The payment due date is the date which is 31 days after the bill day, or by the next bill date (i.e., same date in the following month as the bill date), whichever is the shortest interval except as provided herein, and are payable in immediately available funds. If such payment due date would cause the payment to be due on a Saturday, Sunday or federal observed Holiday (e.g., New Year's Day, Birthday of Martin (C)
Luther King, Jr., Washington's Birthday, Memorial Day, Independence (C)
Day, Labor Day, Columbus Day, Veterans Day, Thanksgiving Day, (C)
Christmas Day), payment for such bills will be due from the customer as follows:

If such payment due date falls on a Sunday or on a federal observed (C)
Holiday which is observed on a Monday, the payment due date shall be the first non-federal observed Holiday day following such Sunday (C)
or federal observed Holiday. If such payment due date falls on a (C)
Saturday or on a federal observed Holiday which is observed on (C)
Tuesday, Wednesday, Thursday or Friday, the payment due date shall be the last non-federal observed Holiday day preceding such (C)
Saturday or federal observed Holiday. (C)

Payment for Federal Government customers will be in compliance with the Federal Acquisition Regulations Clause 52.232-25 - Prompt Payment.

(b) Further, if any portion of the payment is received by the Telephone Company after the payment due date as set forth in (a) preceding, or if any portion of the payment is received by the Telephone Company in funds which are not immediately available to the Telephone Company, then a late payment penalty may be due to the Telephone Company. The late payment penalty shall be the portion of the payment not received by the payment due date times a late factor. The late factor shall be 1% per month (.000329 per day) or 12% annually. The late payment for Federal Government customers shall be in compliance with the Federal Acquisition Regulations Clause 52.232-25 - Prompt Payment.

All BellSouth marks contained herein and as set forth in the trademarks and servicemarks section of this Tariff are owned by BellSouth Intellectual Property Corporation.
****

ACCESS SERVICE
2 - General Regulations (Cont'd)

2.4 Payment Arrangements and Credit Allowances (Cont'd)

2.4.1 Payment of Rates, Charges and Deposits (Cont'd)

(B) (Cont'd)

(3) (Cont'd)

(c) Payment of Rates, Charges and Deposits

In the event of a billing dispute, the customer must submit a documented claim for the disputed amount. If the dispute is submitted on or before the payment due date or within 90 days after the payment due date and the disputed amount is paid prior to resolution of the dispute, any interest credits due the customer upon resolution of the dispute shall be calculated from the date of the overpayment to the resolution date. If the dispute is submitted more than 90 days after the payment due date and the disputed amount is paid prior to resolution of the dispute, any interest credits due the customer upon resolution of the dispute shall be calculated from the dispute date or the date the payment is made, whichever occurs later, to the resolution date. The Telephone Company will resolve the dispute and assess interest credits or late payment penalties to the customer as follows.

If the dispute is resolved in favor of the Telephone Company and the customer has paid the disputed amount on or before the payment due date, no credits or late payment penalties will happly to the disputed amount.

If the dispute is resolved in favor of the Telephone Company and the customer has withheld the disputed amount, any payments withheld pending settlement of the dispute shall be subject to the late payment penalty as set forth in (b) preceding.

If the dispute is resolved in favor of the customer and the customer has withheld the disputed amount, no credits or late payment penalties will apply to the disputed amount.

If the dispute is resolved in favor of the customer and the customer has paid the disputed amount, the customer will receive a credit from the Telephone Company for the disputed amount times a penalty factor as set forth preceding. The penalty factor shall be 1% per month (.000329 per day) or 12% annually.

If a customer's traffic terminates to an end office via an (N)
alternative tandem service provider (TSP), any terminating (N)

****

ACCESS SERVICE

2 - General Regulations (Cont'd)

2.4 Payment Arrangements and Credit Allowances (Cont'd)

2.4.1 Payment of Rates, Charges and Deposits (Cont'd)

(B) (Cont'd)

(3) (Cont'd)

(c) Payment of Rates, Charges and Deposits (Cont'd)

usage dispute for that end office must identify the quantity of MOUs the customer's records indicate to be terminated via an alternative TSP. (N)

Upon receipt of the dispute involving usage terminated via an alternative TSP, the Telephone Company will verify that the disputed bill accurately represents the information provided to the Telephone Company pursuant to 6.6.5 following, within 15 days of receipt of a dispute notification. (N)

If the billing agrees with the billing data received pursuant to 6.6.5 following, the Telephone Company will refer the dispute to the entity providing the billing data information within 16 days from the date the dispute was received. (N)

The provider of the billing data information will investigate the claim and reply to the Telephone Company within 15 days of the referral. (N)

The provider of the billing data information, the customer and the Telephone Company will work cooperatively to resolve any remaining discrepancies. (N)

If the entity providing the billing data information fails to cooperate with the Telephone Company to resolve billing disputes involving usage billed based on the billing data information received, the Telephone Company may refuse to accept future billing data information and bill the full terminating charges for all usage to the alternative TSP. (N)

The terms and conditions in 2.4.1(B)(3)(c) preceding still apply except for the following: (N)

If the Telephone Company accurately billed the usage as contained in the billing data information provided to it, the Telephone Company will not be liable for any interest due the customer for overpayment if the dispute is resolved in the customer's favor. (N)

****

ACCESS SERVICE

2 - General Regulations (Cont'd)

2.4 Payment Arrangements and Credit Allowances (Cont'd)

2.4.1 Payment of Rates, Charges and Deposits (Cont'd)

(C) Adjustments for the quantities of services established or discontinued in any billing period beyond the minimum period set forth for services in other sections of this tariff will be prorated based on the number of days the customer had service during the billing period times 1/30th the monthly rate. Billing for service begins on the day following the date of installation and shall accrue through and including the day service is discontinued. The Telephone Company will, upon request and if available, furnish such detailed information as may reasonably be required for verification of any bill, including information relative to the development of the subscriber line ratio.

(D) When a rate as set forth in this tariff is shown to more than two decimal places, the charges will be determined using the rate shown. The resulting amount will then be rounded to the nearest penny (i.e., rounded to two decimal places).

(E) When more than one copy of a customer bill for services provided under the provisions of this tariff is furnished to the customer, an additional charge applies for each additional copy of the bill as set forth in 13.3.6 following.

(F) The dispute date is the date the customer presents sufficient documentation to support the claim. Sufficient documentation consists of the following information, where such information is relevant to the dispute and reasonably available to the customer:

(1) Special Access (a.k.a. BellSouth SPA) (T)

The nature of the dispute (i.e., incorrect rate, incorrect circuit type etc.), including the basis for the customer's belief that the bill is incorrect.

The billing account number(s) assigned by the Telephone Company.

The amount of money in dispute.

The date of the bill in dispute.

****

2.4 Payment Arrangements and Credit Allowances (Cont'd)

2.4.1 Payment of Rates, Charges and Deposits (Cont'd)

(F) (Cont'd)

(2) BellSouth SWA (Non-Usage) (T)

The nature of the dispute (i.e., incorrect rate etc.), including the basis for the customer's belief that the bill is incorrect.

The billing account number(s) assigned by the Telephone Company.

The amount of money in dispute.

The date of the bill in dispute.

(3) BellSouth SWA (Usage) (T)

The nature of the dispute (i.e., incorrect rate, incorrect minutes of use, etc.), including the basis for the customer's belief that the bill is incorrect.

The type of usage (i.e., originating or terminating).

The Telephone Company end office where the minutes of use originated or terminated (if applicable).

The number of minutes in dispute.

The billing account number(s) assigned by the Telephone Company.

The amount of money in dispute.

The date of the bill.

****

ACCESS SERVICE

2 - General Regulations (Cont'd)

2.4 Payment Arrangements and Credit Allowances (Cont'd)

2.4.1 Payment of Rates, Charges and Deposits (Cont'd)

(G) The Telephone Company and the customer shall work cooperatively to resolve the dispute.

If additional information from the customer would assist in resolving the dispute, the customer may be requested to provide additional information relevant to the dispute and reasonably available to the customer. This data may include, but is not limited to summarized usage data by time of day. The request for such additional information shall not affect the dispute date established pursuant to 2.4.1(F) preceding.

(H) For purposes of 2.4.1(B)(3)(c), the resolution date is the date on which the Telephone Company completes the investigation of the dispute, and the Telephone Company's service representative notifies the customer of the disposition and notes the customer's account or when the Telephone Company forwards the amount of credit to the customer, depending upon customer preference.

(I) At the option of the customer, all nonrecurring charges associated with a Standard or Negotiated Interval Access Order may be billed over a three month period subject to the following:

- 50% of the total nonrecurring charges will be billed in the first monthly billing period after the charges are incurred, and 25% of the total nonrecurring charges plus an Extended Billing Plan Charge will be billed in each of the following two monthly billing periods.

- The Extended Billing Plan Charge is calculated at a rate of 1.0% per month or 12% annually, on the remaining balance of the nonrecurring charges.

- The customer must request extended billing on or before the Application Date as set forth in 5.1.1. following for a Standard or Negotiated Interval Access Order.

- If the customer disconnects service before the expiration of the plan period, all unbilled charges plus the Extended Billing Plan Charge, if applicable, will be included in the final bill rendered.

****

2.4 Payment Arrangements and Credit Allowances (Cont'd)

2.4.1 Payment of Rates, Charges and Deposits (Cont'd)

(I) (Cont'd)

- This payment arrangement is not available for Daily Program Audio (a.k.a. BellSouth SPA Program Audio) and Daily Video (a.k.a. BellSouth SPA Video).

- If the customer fails to make any of the payments on the payment due date as set forth in 2.4.1(B)(3)(a) preceding, late payment charges as specified in 2.4.1(B)(3)(b) preceding will apply.

(J) When utility or telecommunications assessments, franchise fees, or privilege, license, occupational, excise, or other similar taxes or fees, based on interstate receipts are imposed by certain taxing jurisdictions upon the Telephone Company, the amounts of such taxes or fees will be billed to Customers in such a taxing jurisdiction on a prorated basis except where such customers are exempt from the tax. The amount of charge that is prorated to each Customer's bill is determined by the interstate telecommunications services provided to and billed to a Customer service location in such a taxing jurisdiction with the aggregate of such charges equal to the amount of the tax or fee imposed upon or passed on to the Telephone Company. The taxing jurisdictions in which the charges will be applicable are:

Jurisdiction	Tax Factors	
		(D)
		(D)
South Carolina municipalities listed below	0.75%	
Aiken		
Allendale		
Anderson		
Arcadia Lakes		
Bamberg		
Barnwell		
Batesburg/Leesville		
Belton		
Bennettsville		
Blenheim		
Blythewood		
Burnettown		
Calhoun Falls		
Camden		
Carlisle		
Cayce		
Central		
Central Pacolet		
Chapin		

All BellSouth marks contained herein and as set forth in the trademarks and servicemarks section of this Tariff are owned by BellSouth Intellectual Property Corporation.
****

2.4 Payment Arrangements and Credit Allowances (Cont'd)

2.4.1 Payment of Rates, Charges and Deposits (Cont'd)

(J) Cont'd

Jurisdiction	Tax Factor
South Carolina municipalities listed below	0.75%
Charleston	
Cheraw	
Clemson	
Clinton	
Clio	
Clover	
Columbia	
Cowpens	
Darlington	
Denmark	
Dillon	
Eastover	
Edgefield	
Edisto Beach	
Elgin	
Florence	
Folly Beach	
Forest Acres	
Fountain Inn	
Gaston	
Goose Creek	
Greenville	
Greer	
Hanahan	
Hartsville	
Hickory Grove	
Hilda	
Hollywood	(N)
Honea Path	
Irmo	
Isle of Palms	
Iva	
James Island	
Johnston	
Kiawah Island	
Lake View	
Landrum	
Latta	
Lexington	
Lincolnville	
Little Mountain	
Marion	
Mauldin	
McColl	
Moncks Corner	

All BellSouth marks contained herein and as set forth in the trademarks and servicemarks section of this Tariff are owned by BellSouth Intellectual Property Corporation.
****

2.4 Payment Arrangements and Credit Allowances (Cont'd)

2.4.1 Payment of Rates, Charges and Deposits (Cont'd)

(J) Cont'd

Jurisdiction	Tax Factor
South Carolina municipalities listed below	0.75%
Mt. Pleasant	
Mullins	
Myrtle Beach	
New Ellenton	
Newberry	
Nichols	
Norris	
North Augusta	
North Charleston	
Orangeburg	
Peak	
Pelzer	
Pendleton	
Pickens	
Pine Ridge	
Pomaria	
Prosperity	
Quinby	
Ravenel	
Reevesville	
Reidville	
Ridgeland	
Ridgeville	
Salem	
Salley	
Seabrook Island	
Sellers	
Seneca	
Sharon	
Smyrna	
Snelling	
Society Hill	
South Congaree	
Spartanburg	
Springdale	(N)
Springfield	
St. George	
Sullivan's Island	
Summerville	
Tatum	
Timmonsville	
Travelers Rest	
Trenton	

All BellSouth marks contained herein and as set forth in the trademarks and servicemarks section of this Tariff are owned by BellSouth Intellectual Property Corporation.
****

2.4 Payment Arrangements and Credit Allowances (Cont'd)

2.4.1 Payment of Rates, Charges and Deposits (Cont'd)

(J) Cont'd

Jurisdiction	Tax Factor
South Carolina municipalities listed below	0.75%
Walhalla	
West Columbia	
West Pelzer	
Westminister	(N)
Whitmire	
Williamston	
York	

2.4.2 Minimum Periods

The minimum period for which services are provided and for which rates and charges are applicable is one month except for those services set forth in Sections 5.6(C), 6.7.20, 6.7.21, 6.7.22, 7.4.4, 7.4.13.2, 10.6.1 and 13.3.5(C)(1)(b), (c) and (d) of this Tariff.

The minimum period for which service is provided and for which rates and charges are applicable for a Specialized Service or Arrangement provided on an individual case basis as set forth in Section 12 following, is one month unless a different minimum period is established with the individual case filing.

All BellSouth marks contained herein and as set forth in the trademarks and servicemarks section of this Tariff are owned by BellSouth Intellectual Property Corporation.
****

ACCESS SERVICE

2 - General Regulations (Cont'd)

2.4 Payment Arrangements and Credit Allowances (Cont'd)

2.4.2 Minimum Periods (Cont'd)

When a service is discontinued prior to the expiration of the minimum period, charges are applicable whether the service is used or not as follows:

(A) When a service with a one month minimum period is discontinued prior to the expiration of the minimum period, a one month charge will apply at the rate level in effect at the time service is discontinued.

(B) Except for High Capacity (a.k.a. BellSouth SPA High Capacity) Individual Case Basis (ICB) services and associated channelization listed in Section 7 and Section 12, when a service with a minimum period greater than one month is discontinued prior to the expiration of the minimum period, the applicable charge will be the lesser of (1) the Telephone Company's total nonrecoverable costs less the net salvage value for the discontinued service or (2) the total monthly charges, at the rate level in effect at the time service is discontinued, for the remainder of the minimum period. For High Capacity (a.k.a. BellSouth SPA High Capacity) Individual Case Basis Services the applicable charge is specified in the Individual Case Basis filing.

(C) When a customer requests the complete termination of a Special Access (a.k.a. BellSouth SPA) Voice Grade (a.k.a. BellSouth SPA DSO VG) Rate Stability Plan prior to the expiration date of the selected service commitment period, a Termination Liability Charge as specified in 7.4.13.5(B) following will apply.

(D) For Special Access (a.k.a. BellSouth SPA) DS1 (a.k.a. BellSouth SPA DS1) service provided under a Federal Government Transport Plan (FGTP) arrangement, minimum period charges are as set forth in 10.6.1(F) following. (N) (N) (N) (N)

2.4.3 Cancellation of an Order for Service

Provisions for the cancellation of an Access Order for BellSouth SWA or Special Access service, (a.k.a. BellSouth SPA) are set forth in 5.4 following.

2.4.4 Credit Allowance for Service Interruptions

(A) General

A service is considered interrupted when it becomes unusable to the customer because of a failure of a facility component used to furnish service under this tariff or in the event that the protective controls applied by the Telephone Company result in the loss of use of the service by the customer as set forth in 6.5.1 following. An interruption period starts when the customer reports the interruption to the Telephone Company, and ends when the service is operative.

****

2.4 Payment Arrangements and Credit Allowances (Cont'd)

2.4.4 Credit Allowance for Service Interruptions (Cont'd)

(B) When a Credit Allowance Applies

In case of an interruption to any service, allowance for the period of interruption, if not due to the negligence of the customer, shall be as follows:

(1) For BellSouth SWA Dedicated Interoffice Channels, Channelization Equipment and Switched Local Channels, Dedicated End Office Trunk Port Service and Dedicated Tandem Trunk Port Service Special Access (a.k.a. BellSouth SPA) services other than SMARTRing service (a.k.a. BellSouth SPA Dedicated Ring), BellSouth Dedicated Ring, SMARTPath service (a.k.a. BellSouth SPA DS1 Shared Ring), and SMARTPath DS3 Transport service (a.k.a. BellSouth SPA DS3 Shared Ring), LightGate service (a.k.a. BellSouth SPA Point to Point Network), DS1 (a.k.a. BellSouth SPA DS1) service, BellSouth DS1 Diverse Service, Program Audio (a.k.a. BellSouth SPA Program Audio), DS3 Digital Video Service (a.k.a. BellSouth SPA DS3 Digital Video) and Broadcast Quality Video (a.k.a. BellSouth SPA Broadcast Quality Video) services, Intra-Office (C)
Collocation Cross Connect Service, Physical Access Cross Connect (C)
Service and Virtual Access Cross Connect Service, no credit shall be (C)
allowed for an interruption of less than 30 minutes. The customer shall be credited for an interruption of 30 minutes or more at the rate of 1/1440 of the monthly charges for the facility or service for each period of 30 minutes or major fraction thereof that the interruption continues.

The credits will apply no more than once per month and the total of all credits, including those provided in other sections of this Tariff, shall not exceed the monthly rate for the service. The monthly charges used to determine the credit shall be as follows:

(a) The monthly charge shall be the total of all the monthly rate element charges associated with the highest level inoperative channelized service:

- For BellSouth SWA Transport: BellSouth SWA Local Channel, Dedicated End Office Trunk Port Service and Dedicated Tandem Trunk Port Service, BellSouth SWA Dedicated Interoffice Channel, Channelization Equipment (if applicable) and any Optional Features and Functions.
- For Special (a.k.a. BellSouth SPA) two-point services: two Local Channels, Interoffice Channel and Optional Features and Functions.

(b) For multipoint services, the monthly charge shall be only the total of all the monthly rate element charges associated with the highest level channelized service for that portion of the service that is inoperative (i.e., a local channel per customer premises, interoffice channel and optional features and functions).

(c) For Special Access (a.k.a. BellSouth SPA) channelized services, the monthly charge shall be the total of all the monthly rate element charges associated with that portion of the highest level channelized service that is inoperative.

All BellSouth marks contained herein and as set forth in the trademarks and servicemarks section of this Tariff are owned by BellSouth Intellectual Property Corporation.
****

2.4 Payment Arrangements and Credit Allowances (Cont'd)

2.4.4 Credit Allowance for Service Interruptions (Cont'd)

(B) When a Credit Allowance Applies (Cont'd)

(1) (Cont'd)

(c) (Cont'd)

When the facility which is channelized or the Basic Channelization System itself is inoperative, the monthly charge shall be the total of all the monthly rate element charges associated with the highest level channelized service (i.e., the local channel, interoffice channel, central office channel interface(s) and any optional features and functions, including the Basic Channelization System on the facility to the Hub. When the service which rides a channel of the channelized facility is inoperative (assuming the highest level channelized service is still operative) the monthly charge shall be the total of all the monthly rate element charges associated with that portion of the lower level inoperative service from the Hub to a customer premises (i.e., local channels, interoffice channel, central office channel interface(s), and optional features and functions). For channelized service ordered under the Shared Network Arrangement, certain record keeping complexities necessitate that the host subscriber as well as each service user notify BellSouth Telecommunications, Inc. of any service outage in order to receive a credit allowance.

(d) For BellSouth SWA channelized services, the monthly charge shall be the total of all monthly rate element charges associated with that portion of the highest level channelized service that is inoperative. When the facility which is channelized or the Basic Channelization System itself is inoperative, the monthly charge shall be the total of all the monthly rate element charges associated with the highest level channelized service (e.g., the Switched Local Channel, Switched Interoffice Channels, Channelization Equipment, including the Basic Channelization System on the facility to the Hub, if applicable).

(e) For SMARTPath services (a.k.a. BellSouth SPA Shared Ring) and SMARTPath DS3 Transport service (a.k.a. BellSouth SPA DS3 Shared Ring), the monthly charge shall be the total of all the monthly rate element charges associated with the highest level inoperative channelized service (e.g., SMARTPath Area Connection and SMARTPath Area Junction).

(f) For Intra-Office Collocation Cross Connect, Physical Access Cross Connect, and Virtual Access Cross Connect elements specified in Section 13 of this Tariff, the monthly charge shall be that associated with the specific cross connect that is inoperative. (C) (C) (C)

Certain material previously appearing on this page now appears on 3rd Revised Page 2-31.1

All BellSouth marks contained herein and as set forth in the trademarks and servicemarks section of this Tariff are owned by BellSouth Intellectual Property Corporation.
****

ACCESS SERVICE

2 - General Regulations (Cont'd)

2.4 Payment Arrangements and Credit Allowances (Cont'd)

2.4.4 Credit Allowance for Service Interruptions (Cont'd)

(B) When a Credit Allowance Applies (Cont'd)

(g) For SMARTGate service (a.k.a. BellSouth SPA Managed Shared Ring Network) and BellSouth Managed Shared Ring service, the monthly charge shall be the monthly charges associated with the service (e.g., On-Net or Off-Net). (M) (M) (M) (M)

(2) For Program Audio (a.k.a. BellSouth SPA Program Audio) and Broadcast Quality Video (a.k.a. BellSouth SPA Broadcast Quality Video) and DS3 Digital Video (a.k.a. BellSouth SPA DS3 Digital Video) Special Access services (a.k.a. BellSouth SPA), no credit shall be allowed for an interruption of less than 30 seconds. The customer shall be credited for an interruption of 30 seconds or more as follows:

(a) For two-point services, when monthly rates are applicable, the credit shall be at the rate of 1/8640 of the monthly charges for the service for each period of 5 minutes or major fraction thereof that the interruption continues.

(b) For two-point services, when daily rates are applicable, the credit shall be at the rate of 1/288 of the daily charges for the service for each period of 5 minutes or major fraction thereof that the interruption continues.

(c) For multipoint services, when monthly rates are applicable, the credit shall be at the rate of 1/8640 of the monthly charges for all channel terminations, channel mileages and optional features and functions that are inoperative for each period of 5 minutes or major fraction thereof that the interruption continues.

Certain material now appearing on this page previously appeared on 12th Revised Page 2-31

All BellSouth marks contained herein and as set forth in the trademarks and servicemarks section of this Tariff are owned by BellSouth Intellectual Property Corporation.
****

ACCESS SERVICE

2 - General Regulations (Cont'd)

2.4 Payment Arrangements and Credit Allowances (Cont'd)

2.4.4 Credit Allowance for Service Interruptions (Cont'd)

(B) When a Credit Allowance Applies (Cont'd)

(2) (Cont'd)

(d) For multipoint services, when daily rates are applicable, the credit shall be at the daily rate of 1/288 of the daily charges for each channel termination, channel mileage and optional features and functions that is inoperative for each period of 5 minutes or major fraction thereof that the interruption continues.

(e) For multipoint services, the credit for the monthly or daily charges includes the charges for the distribution amplifier only when the distribution amplifier is inoperative.

(f) When two or more interruptions occur during a period of 5 consecutive minutes, such multiple interruptions shall be considered as one interruption.

(3) For BellSouth SWA service, BellSouth Directory Assistance Access (T)
service, and BellSouth Line Information Data Base Access service (T)
usage sensitive rate elements, no credit shall be allowed for an interruption of less than 24 hours. The customer shall be credited for an interruption of 24 hours or more at the rate applicable to the service involved, for each period of 24 hours or major fraction thereof that the interruption continues. In the case of service billed based upon actual usage, no credit allowance is applicable.

(4) The credit allowance(s) for an interruption or for a series of interruptions shall not exceed (a) the sum of the monthly rates or (b) the assumed minutes of use charge for the service interrupted in any one monthly billing period.

(5) For certain Special Access (a.k.a. BellSouth SPA) services (Wideband (T)
Digital, WD1-3; Digital Data Access (a.k.a. BellSouth SPA DSO Digital (T)
Data), DA1-4; and High Capacity (a.k.a. BellSouth SPA High Capacity) (T)
HC1), any period during which the error performance is below that specified for the service will be considered as an interruption.

****

2.4 Payment Arrangements and Credit Allowances (Cont'd)

2.4.4 Credit Allowance for Service Interruptions (Cont'd)

(B) When a Credit Allowance Applies (Cont'd)

(6) Service interruptions for Specialized Service or Arrangements provided under the provisions of Section 12 following shall be administered in the same manner as those set forth in 2.4.4 unless other regulations are specified with the Individual Case Basis filing.

(7) Service interruption for BellSouth Administrative Management Service shall be administered in the same manner as set forth in 13.3.10(C) following.

(8)(a) For Self-healing Multi-nodal Alternate Route Topology Ring (SMARTRing) service (a.k.a. BellSouth SPA Dedicated Ring) and BellSouth Dedicated Ring, a credit for a service interruption shall apply when a single failure of the Telephone Company's equipment occurs resulting in a service outage of the entire system and the system does not automatically self-heal around the point of failure within one (1) second. No credit shall apply unless the customer reports the service interruption to the Telephone Company and the trouble is found in the Telephone Company equipment based on information provided by the network surveillance system associated with the service. The credit shall equal the total of all the monthly charges for the highest level inoperative channelized (C) service provided, however, no more than one credit shall apply per any given rate element for any given month regardless of the number of interruptions occurring during that month. In Shared Network Arrangements as defined in 6.7.16 and 7.2.11(A) following, with OC-3 SMARTRing service (a.k.a. BellSouth SPA Dedicated Ring) and BellSouth Dedicated Ring credit does not apply to the DS1 facility (C) and/or DS1 Channel Interfaces of the connecting service user. (C)

(b) For service interruptions of individual channel interfaces on a SMARTRing service, (a.k.a. BellSouth SPA Dedicated Ring) and a BellSouth Dedicated Ring, which do not constitute a total ring failure, credit shall be allowed for interruptions of one minute or more. The credit shall apply when the customer reports the interruption to the Telephone Company. The credit shall be at the rate of 1440/1440 of the monthly charge for the service element. Credit allowance limitation shall be in accordance with Section 2.4.4.B)(4) preceding.

All BellSouth marks contained herein and as set forth in the trademarks and servicemarks section of this Tariff are owned by BellSouth Intellectual Property Corporation.
****

2.4 Payment Arrangements and Credit Allowances (Cont'd)

2.4.4 Credit Allowance for Service Interruptions (Cont'd)

(B) When a Credit Allowance Applies (Cont'd)

(b) (Cont'd)

For all other service interruptions resulting from a failure of the Telephone Company's equipment for services connecting to a SMARTRing service (a.k.a. BellSouth SPA Dedicated Ring), and BellSouth Dedicated Ring, credit shall be allowed for an interruption of 30 minutes or more. The credit will begin when the customer reports the interruption to the Telephone Company. This credit shall be at the rate of 1/1440 of the total monthly charges assessed for that portion of the highest level channelized service (C) that is interrupted for each period of 30 minutes or major fraction thereof that the interruption continues.

(c) Credit allowances will not apply if service is interrupted during customer requested upgrades and/or additions to the SMARTRing service (a.k.a. BellSouth SPA Dedicated Ring), and BellSouth Dedicated Ring, or during customer requested rearrangements.

(9) For SMARTPath service (a.k.a. BellSouth SPA Shared Ring), and SMARTPath DS3 Transport service (a.k.a. BellSouth SPA DS3 Shared Ring) rate elements, failure by the Telephone Company to meet the performance guarantee described in Sections 7.2.13(C)(2) and (T) 7.2.14(C)(1) of this Tariff, respectively, will prompt a credit equal (T) to 1440/1440 for effected SMARTPath service (a.k.a. BellSouth SPA DS1 Shared Ring), or SMARTPath DS3 Transport service (a.k.a. BellSouth SPA DS3 Shared Ring), rate elements. A customer request for credit will not be required. The credit will be applied through normal administrative processes and the dollar amount will be reflected on the customer's bill. The credit will apply no more than once per billing period. This credit is in addition to those provided in 2.4.4(B)(1) preceding. The combined total of the credit allowance during a month for failure to meet the performance guarantee in Section 7.2.13(C)(2) or 7.2.14(C)(1), as applicable, and the credit for service interruption contained in Section 2.4.4(B)(1) shall not exceed the monthly rate for the highest level inoperative channelized (C) service.

(10) Credit allowances for service interruptions on DS1 Special Access (a.k.a. BellSouth SPA DS1) service (including DS1 Alternate Serving Wire Center service and LightGate service (a.k.a. BellSouth SPA Point to Point Network) DS1 channel interfaces) will be based on

All BellSouth marks contained herein and as set forth in the trademarks and servicemarks section of this Tariff are owned by BellSouth Intellectual Property Corporation.
****

2.4 Payment Arrangements and Credit Allowances (Cont'd)

2.4.4 Credit Allowance for Service Interruptions (Cont'd)

(B) When a Credit Allowance Applies (Cont'd)

(10) (Cont'd)

the wire center group assignment of the customer's serving wire center, (see Group 1 wire Center list following). For DS1 Special Access (a.k.a. BellSouth SPA DS1) facilities assigned to Group 1 wire centers, the customer shall be credited at the rate of 1440/1440 for service interruptions of one minute or more. Special Access DS1 (a.k.a. BellSouth SPA DS1) customers with facilities assigned to Group 2 wire centers, (all other wire centers not included in Group 1) shall be credited for interruptions of more than 30 minutes but less than or equal to 210 minutes based on the credit allowance schedule following. For service interruptions of 211 minutes or more the customer shall receive a credit of 1440/1440 of the monthly rate. Credit allowances for DS1 Special Access (a.k.a. BellSouth SPA DS1) service interruptions involving more than one wire center group will be based on the respective local channel wire center rate and the highest interoffice channel mileage rate used in provisioning the service. Ratcheting, to account for BellSouth SWA services, will be applied to DS1 Special Access (a.k.a. BellSouth SPA DS1) service interruption credits. Credit allowance limitations shall be in accordance with Section 2.4.4(B)(4) preceding. (T) (C) (D) (D)

Credit Allowance Schedule
Group Wire Centers

Interruption Period	Credit Per Interruption
30 Minutes to 150 Minutes	
All	360/1440
151 Minutes to 210 Minutes	
All	720/1440
211 Minutes or More	
All	1440/1440

The provisions of this subsection do not apply to BellSouth DS1 Diverse service.

All BellSouth marks contained herein and as set forth in the trademarks and servicemarks section of this Tariff are owned by BellSouth Intellectual Property Corporation.
****

2.4 Payment Arrangements and Credit Allowances (Cont'd)

2.4.4 Credit Allowance for Service Interruptions (Cont'd)

(B) When a Credit Allowance Applies (Cont'd)

(10) (Cont'd)

BELLSOUTH GROUP 1 WIRE CENTERS (N)

ATLNGAAC	BRHMALOM	CLMASCSU	JCSNMSCP	(N)
ATLNGAAD	BRHMALOX	CLMASCSW	JCSNMSMB	(N)
ATLNGABH	BRHMALRC	COCYFL13	JCSNMSNR	(N)
ATLNGABU	BRHMALTA	DNWDGAMA	JCSNMSPC	(N)
ATLNGACD	BRHMALVA	DRBHFLMA	JCSNMSRW	(N)
ATLNGACS	BRHMALWE	FTLDFLAP	JCSNMSTR	(N)
ATLNGAEL	BRHMALWL	FTLDFLCR	JCVLFLAR	(N)
ATLNGAEP	BYBHFLMA	FTLDFLCY	JCVLFLBW	(N)
ATLNGAFP	CHMBGAMA	FTLDFLFT	JCVLFLCL	(N)
ATLNGAGC	CHRLNCBO	FTLDFLJA	JCVLFLFC	(N)
ATLNGAGR	CHRLNCCA	FTLDFLMA	JCVLFLIA	(N)
ATLNGAHR	CHRLNCCE	FTLDFLOA	JCVLFLJT	(N)
ATLNGAIC	CHRLNCCR	FTLDFLPL	JCVLFLLF	(N)
ATLNGALA	CHRLNCDE	FTLDFLSG	JCVLFLNO	(N)
ATLNGANW	CHRLNCER	FTLDFLSU	JCVLFLOW	(N)
ATLNGAPP	CHRLNCLP	FTLDFLWN	JCVLFLPP	(N)
ATLNGASS	CHRLNCLX	GNBONCAP	JCVLFLRV	(N)
ATLNGATH	CHRLNCMI	GNBONCAS	JCVLFLSJ	(N)
ATLNGAUY	CHRLNCMO	GNBONCEU	JCVLFLSM	(N)
ATLNGAWD	CHRLNCOD	GNBONCHO	JCVLFLWC	(N)
ATLNGAWE	CHRLNCRE	GNBONCLA	LKWOFLAJ	(N)
BCRTFLBT	CHRLNCSH	GNBONCMC	LLBNGAMA	(N)
BCRTFLMA	CHRLNCTH	GNBONCPG	LSVLKY26	(N)
BCRTFLSA	CHALNCUN	GRNRNCJB	LSVLKY53	(N)
BRHMALBH	CLMASCAR	GTWSTNSW	LSVLKYAN	(N)
BRHMALCH	CLMASCBQ	HLWDFLHA	LSVLKYAP	(N)
BRHMALCP	CLMASCCH	HLWDFLMA	LSVLKYBE	(N)
BRHMALEL	CLMASCDF	HLWDFLPE	LSVLKYBR	(N)
BRHMALEN	CLMASCMI	HLWDFLWH	LSVLKYCS	(N)
BRHMALEW	CLMASCPA	JCBHFLAB	LSVLKYCW	(N)
BRHMALFO	CLMASCSA	JCBHFLMA	LSVLKYFC	(N)
BRHMALFS	CLMASCSC	JCBHFLSP	LSVLKYHA	(N)
BRHMALHW	CLMASCSH	JCSNMSBL	LSVLKYJT	(N)
BRHMALMT	CLMASCSN	JCSNMSCB	LSVLKYOA	(N)

****

2.4 Payment Arrangements and Credit Allowances (Cont'd)

2.4.4 Credit Allowance for Service Interruptions (Cont'd)

(B) When a Credit Allowance Applies (Cont'd)

(10) (Cont'd)

BELLSOUTH GROUP 1 WIRE CENTERS (N)

LSVLKYSH	MMPHTNCK	NSVLTNCD	ORLDFLSA	(N)
LSVLKYSL	MMPHTNCT	NSVLTNCH	PMBHFLFE	(N)
LSVLKYSM	MMPHTNEL	NSVLTNDO	PMBHFLMA	(N)
LSVLKYTS	MMPHTNFR	NSVLTNGH	PMBHFLNP	(N)
LSVLKYVS	MMPHTNGT	NSVLTNHH	PMBHFLTA	(N)
LSVLKYWE	MMPHTNHP	NSVLTNIN	RLGHNCDU	(N)
MIAMFLAE	MMPHTNMA	NSVLTNMC	RLGHNCGA	(N)
MIAMFLAF	MMPHTNMT	NSVLTNMT	RLGHNCGL	(N)
MIAMFLAL	MMPHTNOA	NSVLTNST	RLGHNCHO	(N)
MIAMFLAP	MMPHTNSL	NSVLTNUN	RLGHNCJO	(N)
MIAMFLBA	MMPHTNST	NSVLTNWC	RLGHNCMO	(N)
MIAMFLBC	MMPHTNWW	NSVLTNWM	RLGHNCSB	(N)
MIAMFLBR	MMPHTNZP	NWORLAAR	RLGHNCSC	(N)
MIAMFLCA	MNDRFLAV	NWORLAAV	RLGHNCSI	(N)
MIAMFLDB	MNDRFLLO	NWORLABM	RLGHNCSK	(N)
MIAMFLFL	MTGMAL11	NWORLACA	SMYRGAGP	(N)
MIAMFLGR	MTGMALBI	NWORLACM	SMYRGAMA	(N)
MIAMFLHL	MTGMALDA	NWORLAFR	SMYRGAPF	(N)
MIAMFLIC	MTGMALMB	NWORLAIY	TUKRGAMA	(N)
MIAMFLKE	MTGMALMT	NWORLALK	VRBHFLBE	(N)
MIAMFLME	MTGMALNO	NWORLAMA	VRBHFLMA	(N)
MIAMFLNM	MTRELABK	NWORLAMC	WCLMSCES	(N)
MIAMFLNS	MTRELARS	NWORLAMR	WCLMSCMA	(N)
MIAMFLOL	NDADFLAC	NWORLAMT	WPBHFLAA	(N)
MIAMFLPB	NDADFLBR	NWORLAMU	WPBHFLAN	(N)
MIAMFLPL	NDADFLGG	NWORLARV	WPBHFLGA	(N)
MIAMFLRC	NDADFLOL	NWORLASC	WPBHFLGR	(N)
MIAMFLRR	NDADFLAT	NWORLASK	WPBHFLHH	(N)
MIAMFLSH	NRCRGAMA	NWORLASW	WPBHFLLE	(N)
MIAMFLSO	NSVLTNAA	ORLDFLAP	WPBHFLRB	(N)
MIAMFLWD	NSVLTNAP	ORLDFLCL	WPBHFLRP	(N)
MIAMFLWM	NSVLTNBK	ORLDFLMA		(N)
MMPHTNBA	NSVLTNBV	ORLDFLPC		(N)
MMPHTNBM	NSVLTNBW	ORLDFLPH		(N)

****

2.4 Payment Arrangements and Credit Allowances (Cont'd)

2.4.4 Credit Allowance for Service Interruptions (Cont'd)

(B) When a Credit Allowance Applies (Cont'd)

(11) Application of credits for service outages for LightGate service (a.k.a. BellSouth SPA Point to Point Network), (excluding DS1 channel interfaces), will be calculated as follows: credits will be applied to the monthly rate associated with each activated interface affected, after ratcheting adjustments to account for BellSouth SWA service, if any, for the highest level channelized service. For (C)
system level rate elements, credits applied to the monthly rate associated with the system, after ratcheting adjustments for BellSouth SWA services, based upon the proportion which the interrupted Special Access, (a.k.a. BellSouth SPA) channels, in the system bear to the total activated Special Access (a.k.a. BellSouth SPA) channels, in the system. Where service interruptions of one minute or more per occasion occur, the credit applied shall be 1440/1440. Credit allowance limitations shall be in accordance with Section 2.4.4(B)(4) preceding. (C)
(D)
(D)
(D)

(12) For SMARTGate service (a.k.a. BellSouth SPA Managed Shared Ring Network) and BellSouth Managed Shared Ring service, failure by the Telephone Company to meet the performance guarantee described in 7.4.22(A) following will prompt the credit described in that Section. The combined total of the credit allowance during a month for failure to meet the performance guarantee in Section 7.4.22(A) for SMARTGate service and BellSouth Managed Shared Ring in Section 6.7.20 following, as applicable, and the credit for service interruption contained in Section 2.4.4(B)(1) shall not exceed the monthly rate for the portion of the service affected.

(13) Credit allowances for service interruptions on affected BellSouth SWA DS1 service Local Channel and/or Interoffice Channel elements will be based on the wire center group assignment of the customer's serving wire center, (see Group 1 Wire Center list contained in Section 2.4.4.(B)(10) preceeding). For BellSouth SWA DS1 facilities assigned to Group 1 wire centers, the customer shall be credited at the rate of 1440/1440 for service interruptions of one minute or more. BellSouth SWA DS1 customers with facilities assigned to Group 2 wire centers, (all other wire centers not included in Group 1) shall be credited for interruptions of more than 30 minutes but less than or equal to 210 minutes based on the credit allowance schedule following.

All BellSouth marks contained herein and as set forth in the trademarks and servicemarks section of this Tariff are owned by BellSouth Intellectual Property Corporation.
****

2.4 Payment Arrangements and Credit Allowances (Cont'd)

2.4.4 Credit Allowance for Service Interruptions (Cont'd)

(B) When a Credit Allowance Applies (Cont'd)

(13) (Cont'd)

Service interruptions of 211 minutes or more the customer shall receive a credit of 1440/1440 of the monthly rate. Credit allowances for BellSouth SWA DS1 service interruptions involving more than one wire center group will be based on the respective local channel wire center group and the highest interoffice channel mileage wire center used in provisioning the service. Ratcheting, to account for Special Access (a.k.a. BellSouth SPA) services, will be applied to BellSouth SWA DS1 service interruption credits. When the BellSouth SWA service is provisioned over SMARTRing service (a.k.a. BellSouth Dedicated Ring), the customer must report the outage to obtain the credit. Otherwise, no customer request for the outage credit is required. Credit allowance limitations shall be in accordance with Section 2.4.4.(B)(4). (C) (D)

Credit Allowance Schedule
Group 2 Wire Centers

Interruption Period	Credit Per Interruption
30 Minutes to 150 Minutes	
All 360/1440	
151 Minutes to 210 Minutes	
All	720/1440
211 Minutes or More	
All	1440/1440

All BellSouth marks contained herein and as set forth in the trademarks and servicemarks section of this Tariff are owned by BellSouth Intellectual Property Corporation.
****

ACCESS SERVICE

2 - General Regulations (Cont'd)

2.4 Payment Arrangements and Credit Allowances (Cont'd)

2.4.4 Credit Allowance for Service Interruptions (Cont'd)

(B) When a Credit Allowance Applies (Cont'd)

(14) Application of credits for service outages for BellSouth SWA DS3 will be calculated as follows: For the affected BellSouth Local Channel, Interoffice Channel and BellSouth SWA DS3 Channelization elements, credits will be applied to the monthly charge associated with each element affected for the highest level inoperative (C)
channelized service, after ratcheting adjustments to account for (C)
Special Access (a.k.a. BellSouth SPA) service, if any. Where service interruptions of one minute or more per occasion occur, the credit applied shall be 1440/1440 of the total monthly charge for the rate element involved. When the BellSouth SWA service is provisioned over SMARTRing service (a.k.a. BellSouth SPA Dedicated Ring), the customer must report the outage to obtain the credit. (C)
Credit allowance limitations shall be in accordance with Section 2.4.4.(B)(4) preceding. (C)
(D)
(D)

(15) Application of credits for service outages of BellSouth DS1 Diverse service Local and Interoffice Channels will be calculated as follows: In the event of primary facility path failure, service is guaranteed to switch to an alternate facility path in one minute or less. Failure to meet this guarantee will result in credits being applied to the customer's bill equal to 1440/1440 of the monthly charge associated with the affected service element(s) (e.g., for the affected Local Channel, Interoffice Channel, DS1 Basic Channelization System and associated Central Office Channel Interface(s), and 1.544 Mbps elements of service associated with higher capacity Central Office Channel Interface channelization element(s), where the trouble is on the public right-of-way). Credits will be applied through normal administrative processes and the dollar amount will be reflected on the customer's bill. Ratcheting, to account for BellSouth SWA services, will be applied to BellSouth DS1 Diverse service interruption credits. A customer must report the outage in order to receive credit. The credits will apply no more than once per month and the total of all credits, including those in other sections of this Tariff, shall (C)
not exceed the monthly rate for service.

Service Installation Guarantee is applicable for DS1 Diverse service as specified in 2.4.9 following.

All BellSouth marks contained herein and as set forth in the trademarks and servicemarks section of this Tariff are owned by BellSouth Intellectual Property Corporation.
****

ACCESS SERVICE

2 - General Regulations (Cont'd)

2.4 Payment Arrangements and Credit Allowances (Cont'd)

2.4.4 Credit Allowance for Service Interruptions (Cont'd)

(B) When a Credit Allowance Applies (Cont'd)

(16) For Fast Packet Access Services, a service is considered interrupted when it becomes unusable to the customer because of a failure of a facility component used to furnish service under this tariff. An interruption period starts when the customer reports the interruption to the Telephone Company, and ends when the service is operative. Following are the credit allowances appropriate for Fast Packet Access Services; the credit allowance(s) for an interruption or for a series of interruptions shall not exceed the effective monthly rate for the Fast Packet Access Service. (N)

(a) In case of an interruption to any Fast Packet Access Service (except as specified otherwise in (b) following), the credit allowance for the period of the interruption, if not due to situations set forth in 2.4.4.(C), shall be as follows: (N)

- For Exchange Access Frame Relay Service, Exchange Access Connectionless Data Service, and/or Exchange Access ATM Service, no credit shall be allowed for an interruption of less than 30 minutes. The customer shall be credited for an interruption of 30 minutes or more at the rate of 1/1440 of the monthly charges for the facility or service for each period of 30 minutes or major fraction thereof that the interruption continues. (N)

For the service impacted by the service outage, the Fast Packet Access Service rate elements used to determine the credit allowance amount shall be as follows: (N)

- All network interfaces (N)

****

ACCESS SERVICE

2 - General Regulations (Cont'd)

2.4 Payment Arrangements and Credit Allowances (Cont'd)

2.4.4 Credit Allowance for Service Interruptions (Cont'd)

(B) When a Credit Allowance Applies (Cont'd)

(16) (Cont'd)

(b) In case of an interruption to Managed Shared Frame Relay Service and/or Managed Shared ATM Service, a Service Continuity Credit as follows (instead of the standard Fast Packet Access Service credit allowance for outages set forth previously in (a)) shall apply for service outages according to the schedule provided below if the outage is not due to situations set forth in 2.4.4(C). The customer will be credited the percentage of his effective monthly rate for the MSFRS Connections or MSATMS Connections that are affected by the service interruption (i.e., effective monthly rate meaning the monthly rate discounted by the appropriate Fast Packet Savings Plan discount percentage, if applicable) based upon the period of the actual service outage as set forth in the following chart:

Duration of Service Outage	Service Continuity Credit Percentage
0 – 240 minutes	0%
241 – 360 minutes	33%
361 - 480 minutes	66%
Over 480 minutes	100%

For the services impacted by the service outage, the rate elements used to determine the Service Continuity Credit amount shall be as follows:

- For Managed Shared Frame Relay Service: MSFRS Connections
- For Managed Shared ATM Service: MSATMS Connections

(M)

Certain material previously appearing on this page now appears on Original Page 2-33.8.

All BellSouth marks contained herein and as set forth in the trademarks and servicemarks section of this Tariff are owned by BellSouth Intellectual Property Corporation.
****

2 - General Regulations (Cont'd) (N)

2.4 Payment Arrangements and Credit Allowances (Cont'd) (N)

2.4.4 Credit Allowance for Service Interruptions (Cont'd) (N)

(B) When a Credit Allowance Applies (Cont'd) (N)

(16) (Cont'd) (N)

(c) In case of an interruption to Fast Packet Access Services (N)
subscribed with the Special Provisioning Feature, a Special (N)
Provisioning Credit as follows (instead of the standard Fast Packet (N)
Access Service credit allowance for outages set forth previously in (N)
(a) and (b)) shall apply for service outages if the outage is not (N)
due to situations set forth in 2.4.4.(C). (N)

Except for network maintenance windows, if both circuits in a (N)
Special Provisioning service relationship fail at the same time and (N)
it is determined that both failed at the same time because (N)
diversity was not maintained in the Telephone Company's network, (N)
then the Telephone Company will provide a credit equal to one full (N)
month's charge for each circuit on the subsequent invoice. The (N)
credit itself will be equal to what the customer would have (N)
actually paid that month (credit is net of any FSP credits).

For the services impacted by the service outage, the rate elements (N)
used to determine the Special Provisioning Credit amount shall be (N)
as follows: (N)

- For Exchange Access Frame Relay Service: XAFRS Network (N)
  Interfaces (N)
- For Exchange Access ATM Service: XAATMS Network Interfaces (N)
- For Managed Shared Frame Relay Service: MSFRS Connections (N)
- For Managed Shared ATM Service: MSATMS Connections (N)
- Special Provisioning Feature Charges (N)

(17) For BellSouth Wavelength service a credit for a service interruption (M)
of thirty minutes or more per occasion shall be 100 percent of the (M)
monthly charge associated with the affected service element(s). All (M)
credit allowances shall begin from the time of notice by the customer (M)
to the Company and will end when the service is operative. A (M)
customer must report the outage in order to receive service outage (M)
credit. The total credit received in any month shall not exceed the (M)
monthly rate for the service. (M)

Certain material now appearing on this page previously appeared on 1st Revised Page 2-33.7.

All BellSouth marks contained herein and as set forth in the trademarks and servicemarks section of this Tariff are owned by BellSouth Intellectual Property Corporation.
****

2.4 Payment Arrangements and Credit Allowances (Cont'd)

2.4.4 Credit Allowance for Service Interruptions (Cont'd)

(C) When a Credit Allowance Does Not Apply

No credit allowance will be made for:

(1) Interruptions caused by the negligence of the customer, the customer's end user or the customer/end user's authorized agent. (C) (C)

(2) Interruptions of a service due to the failure of equipment or systems provided by the customer or others.

(3) Interruptions of a service during any period in which the Telephone Company is not afforded access to the premises where the service is terminated.

(4) Interruptions of a service when the customer has released that service to the Telephone Company for maintenance purposes, to make rearrangements, or for the implementation of an order for a change in the service during the time that was negotiated with the customer prior to the release of that service. Thereafter, a credit allowance as set forth in (B) preceding applies.

(5) Interruptions of a service which continue because of the failure of the customer to authorize replacement of any element of special construction, as set forth in BELLSOUTH TELECOMMUNICATIONS, INC.'s TARIFF F.C.C. NO. 2 for Special Construction. The period for which no credit allowance is made begins on the seventh day after the customer receives the Telephone Company's written notification of the need for such replacement and ends on the day after receipt by the Telephone Company of the customer's written authorization for such replacement.

(6) Periods when the customer elects not to release the service for testing and/or repair and continues to use it on an impaired basis.

(7) Periods of temporary discontinuance as set forth in 2.2.1(B) preceding.

All BellSouth marks contained herein and as set forth in the trademarks and servicemarks section of this Tariff are owned by BellSouth Intellectual Property Corporation.
****

2.4 Payment Arrangements and Credit Allowances (Cont'd)

2.4.4 Credit Allowance for Service Interruptions (Cont'd)

(C) When a Credit Allowance Does Not Apply (Cont'd)

(8) An interruption or a group of interruptions, resulting from a common cause, for amounts less than one dollar.

(9) Periods of interruption as set forth in 13.3.1 following.

(10) Interruptions of a service due to commercial power failure.

(11) Interruptions of a service due to labor difficulties, governmental orders, civil commotions, criminal action against the Telephone Company, acts of God, war, or other circumstances beyond the Telephone Company's control.

(12) When unbundled network elements (UNEs) or combinations of UNEs are commingled with Access Services purchased under this Tariff. (N) (N)

(D) Use of an Alternative Service Provided by the Telephone Company

Should the customer elect to use an alternative service provided by the Telephone Company during the period that a service is interrupted, the customer must pay the tariffed rates and charges for the alternative service used.

(E) Temporary Surrender of a Service

In certain instances, the customer may be requested by the Telephone Company to surrender a service for purposes other than maintenance, testing or activity relating to a service order. If the customer consents, a credit allowance will be granted. The credit allowance will be 1/1440 of the monthly rate for each period of 30 minutes or fraction thereof that the service is surrendered. In no case will the credit allowance exceed the monthly rate for the service surrendered in any one monthly billing period.

2.4.5 Reestablishment of Service Following Fire, Flood or Other Occurrence

(A) Nonrecurring Charges Do Not Apply

Charges do not apply for the reestablishment of service following a fire, flood or other occurrence attributed to an act of God provided that:

(1) The service is of the same type as was provided prior to the fire, flood or other occurrence.

All BellSouth marks contained herein and as set forth in the trademarks and servicemarks section of this Tariff are owned by BellSouth Intellectual Property Corporation.
****

ACCESS SERVICE

2 - General Regulations (Cont'd)

2.4 Payment Arrangements and Credit Allowances (Cont'd)

2.4.5 Reestablishment of Service Following Fire, Flood or Other Occurrence (Cont'd)

(A) Nonrecurring Charges Do Not Apply (Cont'd)

(2) The service is for the same customer.

(3) The service is at the same location on the same premises.

(4) The reestablishment of service begins within 60 days after Telephone Company service is available. (The 60 day period may be extended a reasonable period if the renovation of the original location on the premises affected is not practical within the allotted time period.)

(B) Nonrecurring Charges Apply

Nonrecurring Charges apply for establishing service at a different location on the same premises or at a different premises pending reestablishment of service at the original location.

2.4.6 Title or Ownership Rights

The payment of rates and charges by customers for the services offered under the provisions of this tariff does not assign, confer or transfer title or ownership rights to proposals or facilities developed or utilized, respectively, by the Telephone Company in the provision of such services.

2.4.7 Billing of Access Service Provided by Multiple Companies (T)(x)

The Telephone Company will adhere to the standards for billing of access service by multiple companies that are set forth in reference documents Ordering and Billing Forum: Multiple Exchange Carrier Access Billing (MECAB) and Ordering and Billing Forum: Multiple Exchange Carrier Ordering and Design (MECOD).

(D)(x)
(D)(x)
(D)(x)
(D)(x)

(x) Filed in compliance with F.C.C. Report and Order Released October 16, 1992 and F.C.C. First Memorandum Opinion and Order Released July 21, 1993, CC Docket 91-213.

****

ACCESS SERVICE

2 - General Regulations (Cont'd)

2.4 Payment Arrangements and Credit Allowances (Cont'd)

2.4.7 Billing of Access Service Provided by Multiple Companies (S)(x)

(A) Feature Group A (FGA) Service[1] (S)(x)

When a Feature Group A (or LSBSA)2 Switched Access Service is ordered by (S)(x)
a customer where one end of the Transport Element is in the Telephone
Company operating territory and the other end is in another Exchange
Telephone Company operating territory, the Exchange Telephone Company in
whose territory the FGA dial-tone office is located will accept the
order. In addition, the Exchange Telephone Company in whose territory (S)(x)
the customer's serving wire center is located must also receive a copy
of the order from the customer. The Exchange Telephone Company that (S)(x)
accepts the order will then determine the charges involved, arrange to (S)(x)
provide the Access Service ordered and bill the charges in accordance
with its Access Service Tariff.

Upon agreement of the Telephone Companies involved in the provision of (S)(x)
FGA service, the dedicated portions of FGA service (i.e. Switched (S)(x)
Dedicated Interoffice Channel, Switched Local Channel and Channelization (S)(x)
Equipment) will be billed in accordance with the provision of (B) and(C) (S)(x)
following. For non-dedicated portions of FGA service, including the (S)(x)
Interconnection charge, the rates of the billing company will apply. (S)(x)

(D)(y)
(D)(y)
(D)(y)
(D)(y)
(D)(y)
(D)(y)
(D)(y)
(D)(y)
(D)(y)
(D)(y)
(D)(y)

Note 1: Except where indicated herein, references to Feature Groups will also include the applicable Basic Serving Arrangement (BSA) as detailed in the matrix of Section 6.1.3(A)(5)(j) (e.g., the term FGA represents both FGA and Line Side Basic Serving Arrangement (LSBSA)). (S)(x)

Note 2: Where LSBSA is provisioned with a DNAL, this section, 2.4.7.(A), shall also apply to the DNAL.

(x) Originally filed under TN 141 scheduled to become effective December 1, 1993, and subsequently deferred under TN 163 until December 30, 1993.

(y) Issued under the authority of Special Permission No. 93-1241.

****

ACCESS SERVICE

2 - General Regulations (Cont'd)

2.4 Payment Arrangements and Credit Allowances (Cont'd)

2.4.7 Billing of Access Service Provided by Multiple Companies (Cont'd)

(B) Single Bill Arrangements

(1) General

If agreed to by the Exchange Telephone Companies involved in the provision of the service, single bill arrangements will be provided for Special Access and for FGB,1 FGC, FGD and the dedicated portions of FGA Switched Access service. (T) (T)

In the event that the Exchange Telephone Companies involved agree to change from one billing arrangement to another, the customer will be notified at least 30 days prior to the effective date of such change.

(2) Ordering

The customer shall place its access service request with each Exchange Telephone Company involved in the provision of the service.

(3) Rating and Billing of Service

The billing company will be as agreed to by the Exchange Telephone Companies involved in the provision of the service. The single bill arrangement may be provided under the following single bill alternatives if agreed to by such companies:

(a) The billing company will bill and collect all appropriate charges in accordance with the regulations, rates and charges in its Access Service tariff, or

Note 1: Except where indicated herein, references to Feature Groups will also include the applicable Basic Serving Arrangement (BSA) as detailed in the matrix of Section 6.1.3(A)(5)(j) (e.g., the term FGA represents both FGA and Line Side Basic Serving Arrangement (LSBSA)).

****

ACCESS SERVICE

2 - General Regulations (Cont'd)

2.4 Payment Arrangements and Credit Allowances (Cont'd)

2.4.7 Billing of Access Service Provided by Multiple Companies (Cont'd)

(B) Single Bill Arrangements (Cont'd)

(3) Rating and Billing of Service (Cont'd)

(b) The billing company will bill and collect all appropriate charges in accordance with the rates and charges in its access tariff, for the portion of the service it provides, and in accordance with the rates and charges of the access tariffs of the other Exchange Telephone Companies involved, for the portion of the service which they provide, with the exception that the billing company's billing regulations, (regulations regarding deposits, late payments, late payment penalties, disputes, interest credits, and extended billing), shall apply. The Interconnection charge of the end office Telephone Company will apply. The bill will separately identify each company's rates and charges, or

(c) The billing company will bill and collect all appropriate charges in accordance with the rates and charges in the access tariffs of the other involved Exchange Telephone Companies, as forwarded to it by such companies for the portion of the service they provide, and in accordance with the rates and charges in its own access tariff for the portion of the service it provides. The Interconnection charge of the end office Telephone Company will apply. The bill will separately identify each company's rates and charges.

For 2.4.7(B)(3)(b) and (c) above, the charges billed for the portion of service provided by this Telephone Company are determined as set forth in 2.4.7(C)(3)(a),(b)and(c). For (C)
2.4.7(B)(3)(a) above, for nonrecurring charges, 100% of this (C)
Telephone Company's charge shall apply. (C)

****

ACCESS SERVICE

2 - General Regulations (Cont'd)

2.4 Payment Arrangements and Credit Allowances (Cont'd)

2.4.7 Billing of Access Service Provided by Multiple Companies (Cont'd)

(C) Multiple Bill Arrangements

(1) General

Separate bills will be rendered by the Exchange Telephone Companies for Special Access and for FGB1, FGC and FGD and the dedicated portions of FGA Switched Access Service if the administration of a single bill arrangement, as set forth in 2.4.7(B), is not agreed upon by the companies involved. In the event that the Exchange Telephone Companies involved agree to change from one billing arrangement to another, the customer will be notified at least 30 days prior to the effective date of such change.

(2) Ordering

The customer shall place its access service request with each Exchange Telephone Company involved in the provision of the service.

(3) Rating and Billing of Service

Each company will provide its portion of the Access Service based on the regulations, rates and charges contained in its Access Service tariff, subject to the following rules, as appropriate:

(a) The charges billed by this company for mileage sensitive rate elements, e.g., Switched Access Service Switched Transport, Special Access Service Interoffice Channel, or Directory Assistance Transport, are determined as follows:

(i) The total mileage for the service is computed using V&H Coordinate Method set forth in NATIONAL EXCHANGE CARRIER ASSOCIATION, INC., TARIFF F.C.C. NO. 4. (Z) (Z)

Note 1: Except where indicated herein, references to Feature Groups will also include the applicable Basic Serving Arrangement (BSA) as detailed in the matrix of Section 6.1.3(A)(5)(j) (e.g., the term FGA represents both FGA and Line Side Basic Serving Arrangement (LSBSA)).

****

2 - General Regulations (Cont'd)

2.4 Payment Arrangements and Credit Allowances (Cont'd)

2.4.7 Billing of Access Service Provided by Multiple Companies (Cont'd)

(C) Multiple Bill Arrangements (Cont'd)

(3) Rating and Billing of Service (Cont'd)

(a) (Cont'd)

(ii) A billing factor is determined from NATIONAL EXCHANGE CARRIER ASSOCIATION INC. (NECA) TARIFF F.C.C. NO. 4 directly.

(iii) This company's rates and charges are then multiplied by the appropriate quantity(ies) and the billing factor to obtain the charges for this company.

An example of this methodology is shown in 2.4.7(C)(4) following.

(b) The application of nondistance sensitive rate elements varies according to the rate structure and the location of the facilities involved:

(i) When rates and charges are listed on a per point of termination basis, this company's rates will be billed for the termination(s) within this company's operating territory.

(ii) When rates and charges are listed on a per unit basis, e.g., central office bridging or channelization, this company's rates and charges will apply for units located in this company's operating territory. For switched access common transport (C)(x)
between a Telephone Company access tandem and an end office of (N)(x)
another telephone company, 50% of this telephone company's (N)(x)
Common Transport DS3 to DS1 Multiplexer rate, as set forth in (N)(x)
Section 6.8.1(B)(2)(a), and this telephone company's Directory (N)(x)
Transport DS3 to DS1 Multiplexer rate, as set forth in Section (N)(x)
9.1.6(B)(6) shall apply. (N)(x)

(iii) When rates and charges are developed on an individual case basis, such rates will be developed for the portion of the service provided by this company.

(x) Issued on not less than 36 days' notice under authority of and in compliance with FCC Orders DA 97-2358 and FCC 97-158, as amended.

****

ACCESS SERVICE

2 - General Regulations (Cont'd)

2.4 Payment Arrangements and Credit Allowances (Cont'd)

2.4.7 Billing of Access Service Provided by Multiple Companies (Cont'd) (T)(x)

(C) Multiple Bill Arrangements (Cont'd) (C)(x)

(3) Rating and Billing of Service (Cont'd)

(b) (Cont'd)

(iv) When rates and charges are listed on a per service basis, this company's rates and charges are allocated based upon the ratio of points on the access circuit that this company owns, in relation to the total number of points on the circuit. (C)(x)

(v) For Special Access Interoffice Channel fixed rates, 50% of this company's rate will apply for each end of the Interoffice Channel that this company provides. (C)(x)

For example:

If the Interoffice Channel fixed rate is $11.80, and this company provides only one end of the Interoffice Channel, the rate would be 50% of $11.80, or $5.90. (C)(x)

If this company does not provide either end of the Interoffice Channel, this company's Interoffice Channel fixed rate shall not apply.

(vi) For Switched Interoffice Channel Facility Termination rates, 50% of this company's rate will apply for each end of the Switched Interoffice Channel that this company provides. (N)(x) (N)(x) (N)(x)

(D)(x)
(D)(x)
(D)(x)
(D)(x)

Certain material previously appearing on this page now appears on Original Page 2-42.1.

(x) Filed in compliance with F.C.C. Report and Order Released October 16, 1992 and F.C.C. First Memorandum Opinion and Order Released July 21, 1993, CC Docket 91-213.

****

2.4 Payment Arrangements and Credit Allowances (Cont'd)

2.4.7 Billing of Access Service Provided by Multiple Companies (Cont'd)

(C) Multiple Bill Arrangements (Cont'd)

(3) Rating and Billing of Service (Cont'd)

(b) (Cont'd)

(vi) (Cont'd)

For example:

If the Switched Dedicated Interoffice Channel Facility Termination rate is $15.00, and this company provides only one end of this Switched Dedicated Interoffice Channel, the rate would be 50% of $15.00, or $7.50.

If this Company does not provide either end of the Switched Interoffice Channel, this company's Switched Interoffice Channel Facility Termination rate shall not apply.

(vii) Where this company is the end office company, 100% of this Company's Interconnection charge will apply.

(c) For nonrecurring charges, 100% of this company's charge shall apply; provided, however, that for installation charges pursuant to (C)
Section 6.8.1(E), only 50% of this Company's installation charges (C)
will apply where, for trunk installations this Telephone Company (C)
owns neither the involved end office or access tandem, or for line (C)
side installations this Company does not own the Feature Group A (C)
dial tone office. (C)

****

ACCESS SERVICE

2 - General Regulations (Cont'd)

2.4 Payment Arrangements and Credit Allowances (Cont'd)

2.4.7 Billing of Access Service Provided by Multiple Companies (Cont'd)

(C) Multiple Bill Arrangements (Cont'd)

(4) Multiple Bill Example[1] for Switched Transport Rate Elements (C)(x)

Assume Switched Dedicated or Common Transport is ordered to an End Office in the operating territory of Company A. The Customer Premises is located in the operating territory of Company B. (C)(x) (M)(x) (M)(x)

(a) Switched Dedicated Transport (N)(x)

Assume 20 miles of Switched Dedicated Transport (DT); Assume 8,000 minutes of use; Assume billing factor from NECA 4 of 28% for Company A and 72% for Company B. (N)(x) (N)(x) (N)(x)

(N)(x)

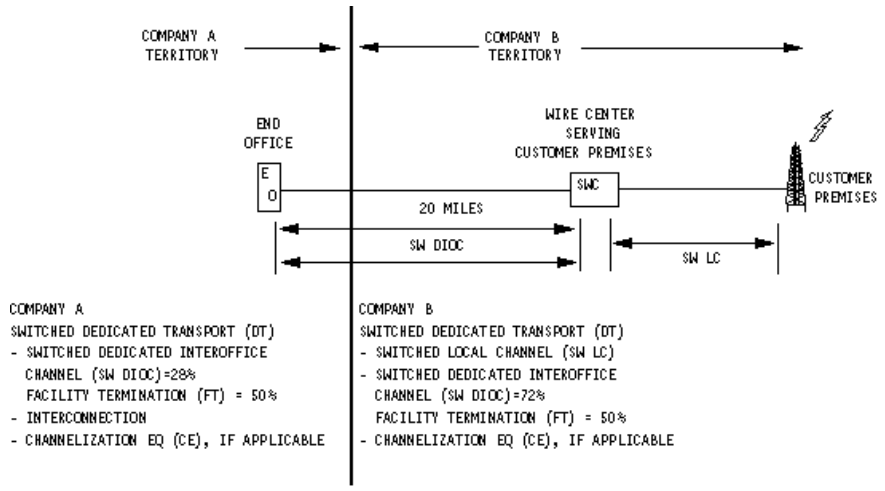

(N)(x)
(N)(x)
(N)(x)
(N)(x)
(N)(x)
(N)(x)
(N)(x)
(N)(x)
(N)(x)
(N)(x)
(N)(x)
(N)(x)
(N)(x)
(N)(x)
(N)(x)
(N)(x)
(N)(x)
(N)(x)

Note 1: Rates used in each example are for example purposes only. (N)(x)

Certain material appearing on this page previously appeared on 3rd Revised Page 2-43.

(x) Filed in compliance with F.C.C. Report and Order Released October 16, 1992 and F.C.C. First Memorandum Opinion and Order Released July 21, 1993, CC Docket 91-213.

****

ACCESS SERVICE

2 - General Regulations (Cont'd)

(D)(x)

(D)(x)

(D)(x)

(D)(x)

(D)(x)

(D)(x)
(D)(x)
(D)(x)
(D)(x)
(D)(x)
(D)(x)
(D)(x)
(D)(x)
(D)(x)
(D)(x)
(D)(x)
(D)(x)
(D)(x)

(D)(x)

(D)(x)

(D)(x)

(D)(x)

(D)(x)

(D)(x)
(D)(x)
(D)(x)
(D)(x)

Certain material previously appearing on this page now appears on Original Page 2-42.2.

(x) Filed in compliance with F.C.C. Report and Order Released October 16, 1992 and F.C.C. First Memorandum Opinion and Order Released July 21, 1993, CC Docket 91-213.

****

ACCESS SERVICE

2 - General Regulations (Cont'd)

2.4 Payment Arrangements and Credit Allowances (Cont'd)

2.4.7 Billing of Access Service Provided by Multiple Companies (Cont'd)

(C) Multiple Bill Arrangements (Cont'd)

(4) Multiple Bill Example[1] for Switched Transport Rate Elements (Cont'd)

(a) (Cont'd)

Switched Dedicated Transport (N)(x)

COMPANY A - DT = $1.00 per mile, FT = $25.00 per month (N)(x)
INTERC. = $.002 per mou (N)(x)

(DT)	20 mi * $1.00 * 28%	=	$ 5.60	(N)(x)
(FT)	$25.00 * 50%	=	$12.50	(N)(x)
(INTERC.)	$.002 * 8,000 mou	=	$16.00	(N)(x)

COMPANY A SWITCHED TRANSPORT = $34.10 (N)(x)

COMPANY B - DT = $.50 per mile (N)(x)
FT = $15.00 per month (N)(x)
SW LC = $10.00 per month (N)(x)

(SW LC)		=	$10.00	(N)(x)
(FT)	$15.00 * 50%	=	$ 7.50	(N)(x)
(DT)	20 mi * $.50 * 72%	=	$ 7.20	(N)(x)

COMPANY B SWITCHED TRANSPORT = $24.70 (N)(x)

Note 1: Rates used in each example are for example purposes only. (N)(x)

(x) Filed in compliance with F.C.C. Report and Order Released October 16, 1992 and F.C.C. First Memorandum Opinion and Order Released July 21, 1993, CC Docket 91-213.

****

2.4 Payment Arrangements and Credit Allowances (Cont'd)

2.4.7 Billing of Access Service Provided by Multiple Companies (Cont'd)

(C) Multiple Bill Arrangements (Cont'd)

(4) Multiple Bill Example[1] For Switched Transport Rate Elements (Cont'd)

(b) Switched Common Transport

Assume 20 miles of Switched Common Transport (CT); 20 miles of Switched Dedicated Transport (DT); and 8,000 minutes of use; with a billing factor from NECA 4 of 28% for Company A and 72% for Company B. (C)(x) (C)(x)

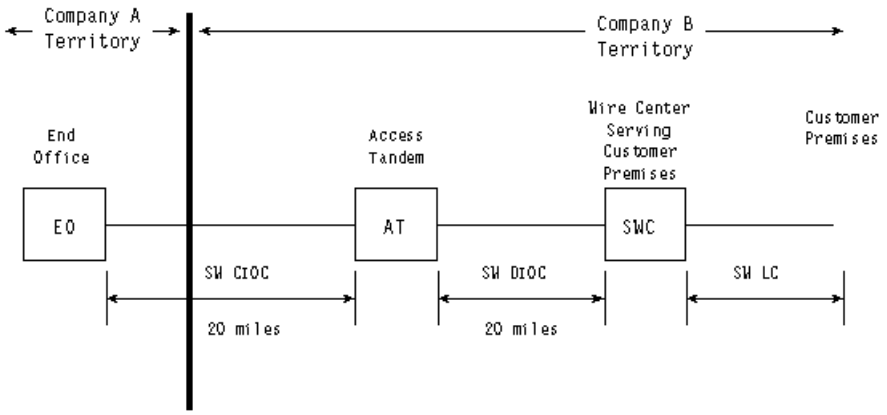

(C)(x) (C)(x) (C)(x) (

2.4 Payment Arrangements and Credit Allowances (Cont'd)

2.4.7 Billing of Access Service Provided by Multiple Companies (Cont'd)

(C) Multiple Bill Arrangements (Cont'd)

(4) Multiple Bill Example[1] for Switched Transport Rate Elements (Cont'd)

(b) Switched Common Transport (Cont'd)

COMPANY A - CT = $.0001 per mou/per mile
CT FT = $.0001 per mou (T)(x)
INTERC. = $.002 per mou

(INTERC.)	$.002 * 8,000 mou	= $16.00	
(CT)	20 mi * $.0001 * 8,000 mou * 28%	= $ 4.48	
(CT FT)	$.0001 * 8,000 mou * 50%	= $ .40	(T)(x)
COMPANY A SWITCHED TRANSPORT		= $20.88	

COMPANY B - CT = $.0003 per mou/per mile
CT FT = $.0001 per mou (T)(x)
DT = $ 2.00 per mile (C)(x)
DT FT = $30.00 per month (C)(x)
AT Switching = $.00005 per mou
SW LC = $10.00

(SW LC)		= $10.00	
(AT SW)	$.00005 * 8,000 mou	= $ .40	
(CT)	20 mi * $.0001 * 8,000 mou * 72%	= $11.52	
(CT FT)	$.0001 * 8,000 mou * 50%	= $ .40	(T)(x)
(DT)	20 mi * $2.00	= $40.00	(C)(x)
(DT FT)	$30.00	= $30.00	(C)(x)
COMPANY B SWITCHED TRANSPORT		= $92.32	(C)(x)

Note 1: Rates used in examples are for example purpose only and do not (C)(x)
include multiplexing, tandem trunk ports and end office trunk ports. (C)(x)

(x) In compliance with the order of the Federal Communications Commission in The Matter of Access Charge Reform; Price Cap Performance Review for Local Exchange Carriers; Transport Rate Structure and Pricing, and End User Common Line Charges, CC Dkt. Nos. 96-262, 94-1, 91-213, 95-72, released May 16, 1997.

****

2.4 Payment Arrangements and Credit Allowances (Cont'd)

2.4.8 Optional Payment Plans

(A) Channel Services Payment Plan

(1) General

(a) The regulations specified herein are applicable only to specific special access services as indicated in the rate regulations for such services in Section 7 of this tariff.

(b) The terms of this Channel Services Payment Plan (CSPP) apply to such specific special access services except as noted in the rate regulations for the given service.

(c) The CSPP allows customers to pay stabilized monthly rates for fixed service periods selected by the customer. The five payment plans offered are Plans A, B, C and Plans 1 and 2. The applicable payment plans for a particular service are set forth in the Rate Regulations section applicable to that service.

The service period for each plan is shown below.

- Payment Plan A, service periods may be selected from 24 months to 48 months in length.

- Payment Plan B, service periods may be selected from 49 months to 72 months in length.

- Payment Plan C, service periods may be selected from 73 months to 96 months in length.

- Payment Plan 1, service periods may be selected from 12 months to 36 months in length.

- Payment Plan 2, service periods may be selected from 37 months to 60 months in length.

As of August 23, 1996, new LightGate (a.k.a. BellSouth SPA Point to Point Network) and/or SMARTRing (a.k.a. BellSouth SPA Dedicated Ring) system installations must be ordered under Transport Payment Plan (TPP) arrangements as specified in 2.4.8(D) following. (T) (T)

****

2.4 Payment Arrangements and Credit Allowances (Cont'd)

2.4.8 Optional Payment Plans (Cont'd)

(A) Channel Services Payment Plan (Cont'd)

(1) General (Cont'd)

(d) When the customer renews a CSPP arrangement under 2.4.8(A)(7)(d) following and the sum of months is greater than the number of months for which the service is available under a CSPP, the current rates for the longest payment plan available for that service will apply. At the expiration of existing CSPP arrangements for LightGate (a.k.a. BellSouth SPA Point to Point Network) and/or SMARTRing (a.k.a. BellSouth SPA Dedicated Ring) customers must renew the service under a TPP arrangement as described under 2.4.8(D) following. Renewals of CSPP arrangements are not permitted.

(e) When the customer orders service to be provided under a CSPP arrangement, the customer must designate to the Telephone Company the payment plan and the service period desired, e.g. Plan C and 84 Months.

(f) Rates stabilized under a CSPP arrangement are exempt from Telephone Company initiated increases, however, decreases for any rate element will automatically be reflected in the rates charged to the customer.

(g) At the expiration of existing Channel Services Payment Plan (CSPP) arrangements for LightGate (a.k.a. BellSouth SPA Point to Point Network) and/or SMARTRing (a.k.a. BellSouth SPA Dedicated Ring) customers must renew the service under a TPP arrangement as described under (7)(d) following. If the customer does not elect to either discontinue service or renew under a new TPP arrangement, service will be continued under month-to-month rates.

(h) Renewals for existing CSPP arrangements will not be available for LightGate (a.k.a. BellSouth SPA Point to Point Network) and/or SMARTRing (a.k.a. BellSouth SPA Dedicated Ring) system installation on or after August 23, 1996. New LightGate (a.k.a. BellSouth SPA Point to Point Network) and/or SMARTRing (a.k.a. BellSouth SPA Dedicated Ring) system installations on or after August 23, 1996, must be ordered under TPP arrangements.

(M)

(M)
(M)
(M)
(M)

Material previously appearing on this page now appears on Original Page 2-45.1.

****

2.4 Payment Arrangements and Credit Allowances (Cont'd) (N)

2.4.8 Optional Payment Plans (Cont'd) (N)

(A) Channel Services Payment Plan (Cont'd) (N)

(1) General (Cont'd) (N)

(i) Starting February 16, 2002 and ending May 15, 2002, services under an existing CSPP arrangement may be converted to an Area Commitment Plan (ACP) arrangement without termination liability. This applies for conversion to comparable ACP commitment rate elements where the time remaining in the commitment period for the ACP arrangement is equal to or greater than the time remaining in the existing CSPP arrangement that is being converted. With this conversion, the ACP commitment level for a new ACP must be equal to the amount of services under CSPP that are being converted, or the ACP commitment level for an existing ACP must be increased by an amount equal to the amount of services under CSPP that are being converted. (N)

(2) Application of Rates (M)

(a) The stabilized monthly recurring rates applicable are those set forth in 7.5 following for the particular service involved as of the Application Date, provided that the actual service date does not exceed the later of the following: (M)

Material appearing on this page previously appeared on Sixth Revised Page 2-45.

****

2.4 Payment Arrangements and Credit Allowances (Cont'd)

2.4.8 Optional Payment Plans (Cont'd)

(A) Channel Services Payment Plan (Cont'd)

(2) Application of Rates (Cont'd)

(1) the Service Date under a standard service interval, or

(2) the earliest date on which service can reasonably be made available to the customer by the Telephone Company.

(b) If the customer desires a service date later than as provided in (a) preceding, the stabilized monthly recurring rates in effect at the time of the actual service date are applicable.

(3) Additions

(a) Additions of services or rate elements, for activating spare or unused capacities of a service under a CSPP arrangement, must be activated at the same stabilized monthly recurring rates specified under the existing CSPP arrangement except for 2.4.8(A), 3(b) and 3(c) following.

(b) LightGate (a.k.a. BellSouth SPA Point to Point Network) and/or SMARTRing (a.k.a. BellSouth SPA Dedicated Ring) CSPP customers must activate spare or unused channel interfaces under the same stabilized monthly recurring rates specified under the existing CSPP arrangement.

(c) Increases in capacity of LightGate (a.k.a. BellSouth SPA Point to Point Network) systems and/or SMARTRing service (a.k.a. BellSouth SPA Dedicated Ring) channels and/or nodes are permitted under CSPP. Such changes may be made by converting the CSPP arrangement to a TPP arrangement as specified in 2.4.8(D) following. When a LightGate system (a.k.a. BellSouth SPA Point to Point Network) and/or a SMARTRing service (a.k.a. BellSouth SPA Dedicated Ring) channel and/or node is added to an existing CSPP arrangement, the payment plan will convert to a TPP arrangement as specified in 2.4.8(D). (T)1

(4) Disconnects

(a) When a service or rate element, included under a CSPP arrangement, is disconnected prior to expiration of the selected service period, termination liability charges apply as set forth in the rate regulations in this tariff for such service. Remaining services or rate elements will not be affected by such disconnections.

(b) When a tariffed service under a CSPP arrangement is disconnected prior to the expiration of a selected service period as a result of a customer requested change to a higher order of a separately tariffed service at the same location, termination liability charges will not apply when:

2.4 Payment Arrangements and Credit Allowances (Cont'd)

2.4.8 Optional Payment Plans (Cont'd)

(A) Channel Services Payment Plan (Cont'd)

(4) Disconnects (Cont'd)

(b) (Cont'd)

(1) the completed service period is 12 months, or 25% of the length of the originally selected CSPP service period, whichever is greater, and

(2) the service period of the new CSPP arrangement for the higher order of service is equal to or longer than the remaining service period of the disconnected arrangement, and

(3) the service orders to install the new higher order of service and disconnect the old service are related together and received by the Telephone Company at the same time, and there is no lapse in service between installation of the higher order of service and disconnection of the existing service, and

(4) the capacity of the higher service is equal to or greater than the existing service. For converting LightGate service (a.k.a. BellSouth SPA Point to Point Network) to SMARTPath DS3 Transport service (a.k.a. BellSouth SPA DS3 Shared Ring) the capacity of the LightGate service (a.k.a. BellSouth Point to Point Network) is considered to be the quantity of DS3's activated on the LightGate service (a.k.a. BellSouth Point to Point Network).

For the purposes of determining a higher order of service, the following ranking will be used (Analog Voice Grade (a.k.a. BellSouth SPA DSO VG) services=lowest, SMARTRing services (a.k.a. BellSouth SPA Dedicated Ring)=highest):

1. Analog Voice Grade (a.k.a. BellSouth SPA DSO VG) Services
2. DSO (a.k.a. BellSouth SPA DSO Digital Data) Services
3. DS1 (a.k.a. BellSouth DPA DS1) Services (described in 7.2.9 following)
4. SMARTPath service (a.k.a. BellSouth SPA DS1 Shared Ring) (described in 7.2.13 following)
5. LightGate service (a.k.a. BellSouth SPA Point to Point Network).
6. BellSouth SPA Managed Shared Network Service
7. SMARTPath DS3 Transport Service (a.k.a. BellSouth SPA DS3 Shared Ring)
8. SMARTGate service (a.k.a. BellSouth SPA Managed Shared Ring Network)/BellSouth Managed Shared Ring service
9. SMARTRing service (a.k.a. BellSouth SPA Dedicated Ring)

Customer requested conversion of Digital Data Access Service (N)
(a.k.a. BellSouth SPA DSO Digital Data) to Fast Packet Access (N)
Service will be treated as an upgrade to a higher order of service (N)
and, as such, termination liability will not apply in accordance (N)
with regulations set forth herein. (N)

All BellSouth marks contained herein and as set forth in the trademarks and servicemarks section of this Tariff are owned by BellSouth Intellectual Property Corporation.
****

ACCESS SERVICE

2 - General Regulations (Cont'd)

2.4 Payment Arrangements and Credit Allowances (Cont'd)

2.4.8 Optional Payment Plans (Cont'd)

(A) Channel Services Payment Plan (Cont'd)

(5) Moves of Service Under CSPP

(a) Moves to a different building will be treated as a discontinuance and start of service and all associated nonrecurring charges will apply as stated in 7.4.5 except as provided in 2.4.8(A)(5)(c).

(b) Moves of service within the same building, where otherwise permissible under the provisions of this tariff, will not constitute a disconnection of service for purposes of the application of termination liability charges. Nonrecurring charges specified in 7.4.5 are applicable.

(c) Termination Liability Charges will not apply to customer requests for moves of service to a different building subject to the following conditions:

- This provision is available only for Voice Grade service (a.k.a. BellSouth SPA DSO VG), Digital Data Access service (a.k.a. BellSouth SPA DSO Digital Data), DS1 High Capacity service (a.k.a. BellSouth SPA DS1), 70 MHz Transport Service (a.k.a. BellSouth SPA 70MHz Transport) and Uncompressed Video service (a.k.a. BellSouth SPA Uncompressed Digital Video Network). Moves of other CSPP services are subject to the regulations included in 7.4.5 following. (T) (T) (T) (T) (T) (T)

****

ACCESS SERVICE

2 - General Regulations (Cont'd)

2.4 Payment Arrangements and Credit Allowances (Cont'd)

2.4.8 Optional Payment Plans (Cont'd)

(A) Channel Services Payment Plan (Cont'd)

(5) Moves of Service Under CSPP

(c) (Cont'd)

- The original and new premises locations must be in Company territory within the same state.

- The move from the original location to the new location must be completed within thirty days of the original premises disconnect date.

- No lapse in billing will occur for moves of service under CSPP.

- Orders to disconnect the existing service and reestablish it at the new location must be related together and received by the Company at the same time.

- Any rate elements or quantities for local channels, interoffice channels, and/or optional features and functions from the original location that are not reestablished at the new location will be subject to applicable Termination Liability Charges.

- Any additions made at the new location will be handled in accordance with 2.4.8(A)(3) preceding. (T)

- All regulations and charges for changes made to the service coincident to the move will apply.

- All appropriate nonrecurring charges for moves of service as specified in 7.4.5 preceding will apply.

- Moves of service that involve a change from interstate to intrastate jurisdiction will not be treated as a disconnect of service with regard to termination liability charge application. The customer must subscribe to a payment arrangement offered in the appropriate intrastate tariff which is equal to or greater than the remaining contract period.

****

ACCESS SERVICE

2 - General Regulations (Cont'd)

2.4 Payment Arrangements and Credit Allowances (Cont'd)

2.4.8 Optional Payment Plans (Cont'd)

Material previously appearing on this page now appears on 6th Revised Page 2-49 and Original Page 2-49.0.1.

****

ACCESS SERVICE

2 - General Regulations (Cont'd)

2.4 Payment Arrangements and Credit Allowances (Cont'd)

2.4.8 Optional Payment Plans (Cont'd)

Material previously appearing on this page now appears on Original Pages 2-49.0.2 and 2-49.0.3.

****

ACCESS SERVICE

2 - General Regulations (Cont'd)

2.4 Payment Arrangements and Credit Allowances (Cont'd)

2.4.8 Optional Payment Plans (Cont'd)

(A) Channel Services Payment Plan (Cont'd)

(6) Requests for Changes in Length of Service Period

(a) Subsequent to the establishment of a CSPP arrangement, and prior to the completion of the selected service period for that arrangement, the CSPP arrangement may be replaced by a new CSPP arrangement at rates and charges in effect on the first day of service under the new CSPP arrangement, subject to the following conditions:

- No credit will be given for payments made under the original CSPP arrangement, except for credits allowed under Sections 2.4.8(A)(9)(a) of this tariff.

- The service period selected for the new CSPP arrangement begins on the new CSPP effective date but not later than the expiration date of the CSPP being replaced.

- Nonrecurring charges will not be reapplied for existing services.

- If the new CSPP arrangement has a service period shorter in length than the time remaining under the service period for the existing CSPP arrangement, the change to the new CSPP arrangement constitutes a disconnection of the existing CSPP arrangement for which termination liability charges apply.

(7) Renewal Options

(a) When a service period under an existing CSPP arrangement is completed, the customer may select a new CSPP arrangement at rates (C)(x)
and charges in effect on the first day of service under the new
CSPP arrangement, continue service under the month-to-month rates, (C)(x)
or discontinue service with no termination liability charge. If (C)(x)
the customer does not elect to either discontinue service or (C)(x)
continue service under a new CSPP arrangement, service will be
continued under month-to-month rates.

(x) Issued under the authority of Special Permission No. 92-759.

****

ACCESS SERVICE

2 - General Regulations (Cont'd)

2.4 Payment Arrangements and Credit Allowances (Cont'd)

2.4.8 Optional Payment Plans (Cont'd)

(A) Channel Services Payment Plan (Cont'd)

(7) Renewal Options (Cont'd)

(b) Any new services added to a customer's network or changes to existing services at the time of renewal will be subject to all appropriate nonrecurring charges.

(c) When a customer renews a CSPP arrangement, the rates and charges in effect on the first day of service of the renewal will apply.

(d) Recognition of previous service will be given to customers who renew an existing CSPP arrangement, for the same or larger system(s) and all associated rate elements at the same location(s), provided that the length of the new CSPP arrangement is equal to or greater than the remaining service period of the original CSPP arrangement. Recognition of previous service will be given to (C)1
LightGate and/or SMARTRing CSPP customers who convert to TPP (C)
arrangements as described in 2.4.8(D) following provided the (C)
customer is the original customer of record at the time of (C)
transfer. (C)

(e) Recognition of previous service will be given to month-to-month customers with a service date of January 1, 1992, or later who convert to a CSPP arrangement, provided the minimum service period has been met. For customers whose service date is January 1, 1992 or earlier, recognition will be given for the previous service back to January 1, 1992. For customers whose service date is later than January 1, 1992, recognition for the previous service will be given back to the actual service date.

(f) To determine the appropriate CSPP Payment Plan for the renewed arrangement, recognition of service will consist of the sum of months in service of the completed service arrangement and the sum of months of the proposed service period of the CSPP arrangement. For example, a CSPP arrangement for a 36 month service period under Plan A is renewed for 24 months with no changes at the end of the 36-month period. The sum of months for the completed and proposed service periods would equal 60 months and would be billed under Payment Plan B.

****

ACCESS SERVICE

2 - General Regulations (Cont'd)

2.4 Payment Arrangements and Credit Allowances (Cont'd)

2.4.8 Optional Payment Plans (Cont'd)

(A) Channel Services Payment Plan (Cont'd)

(7) Renewal Options (Cont'd)

(f) (Cont'd) (M)

Another example is a month-to-month customer, in service for 15 (M)
months, who wishes to convert to a 60-month CSPP arrangement with (M)
no changes. The combined service period of the Month-to-Month (M)
arrangement and the CSPP arrangement is equal to 75 months, which (M)
would be billed under Payment Plan C. (M)

(8) Transfer of Service

(a) Service transferred to a new customer at the same location in accordance with Section 2.1.2 preceding does not constitute a disconnect of service or a discontinuance of an existing CSPP arrangement.

(9) Prepayment

(a) Upon entering into a CSPP arrangement, the customer may prepay the outstanding recurring monthly rates in whole or in part for all rate elements included in the CSPP arrangement. The Company retains full ownership for services in accordance with Section 2.4.6. The following conditions apply:

- A prepayment allowance will be applied to the amount prepaid for each given month equal to 0.6666% per month compounded monthly for the number of months the payment is advanced.

- The customer may elect the percentage of the monthly rates to be prepaid, provided however, the same percentage shall apply to all rate elements included in the CSPP arrangement for all months remaining in the service period.

- This same prepayment percentage will apply in the event the customer adds services to an existing CSPP arrangement subsequent to the establishment of the service.

Certain material now appearing on this page previously appeared on 1st Revised Page 2-48.

****

2.4 Payment Arrangements and Credit Allowances (Cont'd)

2.4.8 Optional Payment Plans (Cont'd)

(A) Channel Services Payment Plan (Cont'd)

(9) Prepayment (Cont'd)

(a) (Cont'd)

- When a customer who has prepaid recurring monthly rates replaces the existing CSPP arrangement with a new CSPP arrangement, the customer will be credited with that portion of the prepayment amount, representing a prepayment of the monthly recurring rates remaining in the existing CSPP arrangement.

- Customers who prematurely disconnect will have termination liability charges deducted from the unused prepaid balance. The remaining prepaid balance, if any, will be credited to their bill.

(B) Area Commitment Plan (ACP)

The Area Commitment Plan (ACP) allows customers who have obtained service on a month-to-month basis to receive reduced rates, in the form (C)
of ACP credits,in exchange for a commitment to maintain a level of (C)
service for a specified period of time. The terms of this plan apply to special access services or switched access services that are available under an ACP, except as noted in the rate regulations for a service.

Services included in a Channel Services Payment Plan (CSPP) and/or a Transport Payment Plan (TPP) may not be included in an ACP or vice versa.

The customer determines the commitment level of rate elements that will be included in an ACP, i.e., the customer will provide the number of (C)
commitment rate elements expressed as a whole number (e.g., 12 DS1 Local (C)
Channels). For example, a customer wishes to establish an ACP for all of (C)
his DS1 services that are billing on a month-to-month basis. The (C)
customer has 12 DS1 Local Channels and 6 DS1 Interoffice Channels that (C)
have a total of 90 Interoffice Channel miles. In this example, the (C)
quantity of commitment rate elements would be specified as 12 DS1 Local (C)
Channels and 90 Interoffice Channel miles. For interoffice channels, (C)
the commitment is based on a quantity of miles. When credits are (C)
applied to interoffice channel miles on a circuit, the customer (C)
automatically receives credit for the fixed rate element component of (C)
the interoffice channel. As a further example, this customer may desire (C)
to establish a commitment level only for a small portion of these DS1 (C)
services. In this case, the customer would specify the level that is (C)
desired (e.g., 1 DS1 Local Channel). ACP commitments are made on a (C)
regional basis, i.e., one commitment for all Company service areas. (C)

Certain material previously appearing on this page now appears on 4th Revised Page 2-49.0.1.

****

ACCESS SERVICE

2 - General Regulations (Cont'd)

2.4 Payment Arrangements and Credit Allowances (Cont'd)

2.4.8 Optional Payment Plans (Cont'd)

(B) Area Commitment Plan (ACP) (Cont'd)

The customer may choose any period of time between 24 and 72 months for (M)
the commitment. The applicable rate for use in the ACP calculation is (M)
the ACP rate selected commitment period. ACP commitment periods are (M)
offered as follows: (M)

- ACP A, commitment periods may be selected from 24 months to 48 months (M)
  in length. (M)

- ACP B, commitment periods may be selected from 49 months to 72 months (M)
  in length. (M)

Each month, the number of the appropriate commitment rate elements
(e.g., DS1 Local Channels) that are to be billed by the Telephone
Company in the region will be determined i.e., the in-service quantity (C)
of commitment rate elements are determined for each billing period (C)
during a month and are accumulated at the end of each month. If that (C)
number of in-service commitment rate elements is equal to or greater (C)
than the commitment level, as determined on the billing period during (C)
the month, that contains the customer's ACP plan information, the (C)
Telephone Company will credit the customer's bill. The credit will be
determined based on the difference in the month-to-month billed rate and (C)
the associated ACP rate for in-service rate elements equal to the (C)
customer's commitment level. If the number of in-service rate elements (C)
are less than the commitment level, the credit will be determined based (C)
on the difference in the month-to-month billed rate and the associated (C)
ACP rate for in-service rate elements. In addition, a shortfall charge, (C)
equal to the difference in the commitment level and the in-service
number multiplied by 50 percent of the ACP rate will be applied. The (C)
credit/shortfall calculations are performed at the end of each month (C)
after all of the in-service and commitment level information has been (C)
compiled for the month and the resulting credit/shortfall amounts are (C)
then applied to the customer's bill during the next month. The ACP rate (C)
that will be used is the one that is in effect on the billing date for
the appropriate commitment period, i.e., the ACP rate is the rate shown (C)
in the tariff at the end of each month when the credit/shortfall (C)
calculations are performed. (C)

(M)

Certain material now appearing on this page previously appeared on 9th Revised Page 2-49.

Certain material previously appearing on this page now appears on Original Page 2-49.0.1.1.

****

ACCESS SERVICE

2 - General Regulations (Cont'd)

2.4 Payment Arrangements and Credit Allowances (Cont'd)

2.4.8 Optional Payment Plans (Cont'd)

(B) Area Commitment Plan (ACP) (Cont'd) (N)

Services available under ACP and the ACP rates are specified in the rate (M)
regulations of the individual services. (M)

Credit and shortfall amounts will be distributed to billing areas based (M)
on each billing area's portion of a customer's regional ACP eligible (M)
in-service units. Each state in the region is considered to be one (M)
billing area. (M)

A customer may have more than one ACP. Where the customer has more than (M)
one ACP agreement, the credits and shortfall charges will be determined (M)
in chronological order, starting with the earliest agreement. (M)

For Interoffice Mileage Commitments under ACP, circuits will be assigned (M)
with the longest mileage circuit assigned first and continuing in (M)
descending order by circuit length until the number of circuits (M)
subscribed to are assigned starting with the earliest agreement. (M)

The customer may add or disconnect services as desired, subject to the (M)
minimum service periods set forth in 7.4.4. following for special access (M)
services or as set forth in 6.7.2. following for switched access (M)
services and subject to applicable nonrecurring charges. Credits for (M)
services under an ACP will be made at the circuit level. (M)

Certain material now appearing on this page previously appeared on 3rd Revised Page 2-49.0.1.

****

ACCESS SERVICE

2 - General Regulations (Cont'd)

2.4 Payment Arrangements and Credit Allowances (Cont'd)

2.4.8 Optional Payment Plans (Cont'd)

(B) Area Commitment Plan (ACP) (Cont'd)

A customer may upgrade services under an ACP to a higher order of service, provided under an Optional Payment Plan (i.e., an ACP, a TPP or (T)
a CSPP arrangement) and request a reduction in his ACP commitment level (T)
without incurring a termination liability. The customer request for the services being upgraded from a lower order of service must be coordinated with the installation of the new service being upgraded to a higher order of service. A new ACP will be issued to reflect a new commitment level. The new commitment level must be equal to or greater than the current commitment level less the quantity of services upgraded.

If the customer desires to increase its commitment level, the customer may enter into an additional agreement for the additional level. The customer may also update an existing ACP agreement to include the increased commitment level. In the latter case, the commitment period for the updated ACP agreement must be equal to or greater than the time remaining in the existing ACP agreement.

If during the commitment period, the customer desires to decrease its commitment level or period, the customer must enter into a new ACP agreement and terminate the existing ACP agreement(s). This will result in a termination liability to be calculated as follows:

The penalty for a decrease in the commitment level or commitment period, per unit decreased, will equal the ACP rate associated with the existing ACP agreement multiplied by the difference in months between the time the ACP agreement has been in effect and the minimal months of the existing agreement times a factor. The factor is 40 percent for agreements that have been in effect twelve months or less, or 20 percent for agreements that have been in effect longer than 12 months.

Changes in commitment periods within a plan (e.g., ACP B) do not constitute a change involving a termination liability.

In the case of a decrease in both a commitment level and commitment period, the termination liability will be calculated first for the reduction in level and then for the reduction in period based on the reduced level.

****

2.4 Payment Arrangements and Credit Allowances (Cont'd)

2.4.8 Optional Payment Plans (Cont'd)

(C) Fast Packet Services Payment Plan

(1) General

(a) The regulations specified herein are applicable only to specific Fast Packet Access Services as indicated in the rate regulations for such services in Section 21 and Section 23 following. (C)

(b) The terms of this Fast Packet Services Payment Plan (SPP) apply to such specific Fast Packet Services except as noted in the rate regulations for the given service.

(c) The Fast Packet SPP allows customers to pay stabilized monthly rates for fixed service periods selected by the customer. The two payment plans offered are as follows:

- Payment Plan A, service periods may be selected from 12 months to 24 months in length.

- Payment Plan B, service periods may be selected from 25 months to 48 months in length.

(d) When the customer renews a Fast Packet SPP arrangement under 2.4.8(C)(7)(d) following and the sum of months is greater than the number of months for which the services is available under a Fast Packet SPP, the current rates for the longest payment plan available for that service will apply. For example, when the customer extends XACDS beyond 48 months, Payment Plan B rates will apply.

(e) When the customer orders service to be provided under a Fast Packet SPP arrangement, the customer must designate to the Company the payment plan and the service period desired, e.g., Plan B and 36 months.

(f) Rates stabilized under a Fast Packet SPP arrangement are exempt from Telephone Company initiated increases, however, decreases for any rate element will automatically flow through to the customer. (T)

****

ACCESS SERVICE

2.4 Payment Arrangements and Credit Allowances (Cont'd)

2.4.8 Optional Payment Plans (Cont'd)

(C) Fast Packet Services Payment Plan (Cont'd)

(2) Application of Rates and Charges

(a) The rates and charges applicable are those in effect as set forth in the rate regulations of this tariff for the particular Fast Packet Access Service involved as of the Application Date, provided that the actual service date does not exceed the later of the following.

(1) the Service Date under a standard service interval, or

(2) the earliest date on which service can reasonably be made available to the customer by the Telephone Company.

(b) If a customer desires a service date later than as provided in (a) preceding, the rates and charges in effect at the time of the actual service date are applicable.

(c) The customer will be required to pay a Termination Liability Charge in the event that all or any part of a service is disconnected at the customer's request prior to expiration of any selected payment period of greater than one month's duration except as specified in 2.4.8(C)(4) following. (C) (C)

(d) The Termination Liability Charge is determined by multiplying the number of months remaining in the payment plan period by the payment plan monthly rate by 90 percent.

-For example, a customer subscribes to a Fast Packet Access Service using Payment Plan A and selects the 18 month payment period. After 12 months the customer chooses to terminate service. The Termination Liability Charge is calculated by multiplying 6 months (18 months - 12 months) by the monthly rate by 90 percent.

(3) Additions

(a) Additions of services or rate elements (e.g., Network Interfaces) must be under a new Fast Packet SPP arrangement at rates and charges specified in 2.4.8(C)(2) preceding.

(b) Termination charges for premature disconnection of added contractual services will apply as set forth under Disconnects in 2.4.8(C)(4) following.

****

ACCESS SERVICE

2.4 Payment Arrangements and Credit Allowances (Cont'd)

2.4.8 Optional Payment Plans (Cont'd)

(C) Fast Packet Services Payment Plan (Cont'd)

(3) Additions (Cont'd)

(c) Additions under Fast Packet SPP are exempt from Company-initiated rate changes for all payment periods longer than one month. However, decreases for any rate element will automatically flow through to the customer.

(4) Disconnects

(a) When a service or rate element, included under a Fast Packet SPP arrangement, is disconnected prior to expiration of the selected service period, Termination Liability Charges apply as set forth in 2.4.8(C)(2) preceding except as specifically stated otherwise (C)
herein 2.4.8(C)(4). Remaining services or rate elements will not (C)
be affected by such disconnections.

(b) When a tariffed service under a Fast Packet SPP arrangement is (N)
disconnected prior to the expiration of a selected service period (N)
as a result of a customer requested change at the same location to (N)
either another speed of the same tariffed service or to another (N)
Fast Packet Access Service under an Optional Payment Plan, (N)
termination liability charges will not apply when: (N)

- The completed service period is 12 months, or 25% of the length (N)
of the originally selected Fast Packet SPP service period, (N)
whichever is greater, and (N)

- The service period of the new Optional Payment Plan arrangement (N)
for the newly selected service is equal to or longer than the (N)
remaining service period of the disconnected arrangement, and (N)

- The newly selected service is a transmission speed that is (N)
either the same as or higher than the old service, or is a (N)
transmission speed that is the next lower transmission speed (N)
from the old service, and (N)

- The service orders to install the newly selected service and (N)
disconnect the old service are related together and received by (N)
the Telephone Company at the same time and there is no lapse in (N)
service between installation of the newly selected service and (N)
disconnection of the existing service. (N)

Nonrecurring charges apply for the installation of the newly (N)
requested service. Termination liability charges may apply for (N)
changes to associated Special Access Services under an Optional (N)
Payment Plan as set forth in tariffs regulating those services. (N)

Material previously appearing on this page now appears on Original Page 2-49.0.5.1.

****

ACCESS SERVICE

2.4 Payment Arrangements and Credit Allowances (Cont'd)

2.4.8 Optional Payment Plans (Cont'd)

(C) Fast Packet Services Payment Plan (Cont'd)

(5) Moves of Service Under Fast Packet SPP (M)

(a) Termination Liability Charges will not apply to customer requests for moves of service under Fast Packet SPP from one location to another location subject to the following: (M)

- The original and new premises locations must be in Company territory within the same state. (M)

- The move from the original location to the new location must be completed within thirty days of the original premises disconnect date. (M)

- No lapse in billing will occur for moves of service under Fast Packet SPP. (M)

- Orders to disconnect the existing service and re-establish it at the new location must be related together and received by the Company at the same time. (M)

- Any rate elements (i.e., Network Interfaces) from the original location that are not re-established at the new location will be subject to applicable Termination Liability Charges. (M)

- Any additions made at the new location will be treated as coterminous additions in accordance with 2.4.8(C)(3) preceding. (M)

Material appearing on this page previously appeared on Original Page 2-49.0.5.
****

ACCESS SERVICE

2.4 Payment Arrangements and Credit Allowances (Cont'd)

2.4.8 Optional Payment Plans (Cont'd)

(C) Fast Packet Services Payment Plan (Cont'd) (N)

(5) Moves of Service Under Fast Packet SPP (Cont'd) (N)

- All regulations and charges for changes made to the service coincident to that move shall apply. (N) (N)

- Moves of service that involve a change of jurisdiction (e.g., interstate to intrastate) will not be treated as a disconnect of service with regard to Termination Liability Charge application. The customer must subscribe to a payment arrangement offered in the appropriate intrastate tariff which is equal to or greater than the remaining contract period. (N) (N) (N) (N) (N) (N)

(6) Requests for Changes in Length of Service Period (N)

(a) Subsequent to the establishment of a Fast Packet SPP arrangement and prior to the completion of the selected service period for that arrangement, the Fast Packet SPP arrangement may be replaced by a new Fast Packet SPP arrangement at rates and charges in effect on the first day of service under the new Fast Packet SPP arrangement, subject to the following conditions: (N) (N) (N) (N) (N) (N)

- No credit will be given for payments made under the original Fast Packet SPP arrangement except for credits allowed under Section 2.4.8(C)(9)(a) following. (N) (N) (N)

- The service period selected for the new Fast Packet SPP arrangement begins on the new Fast Packet SPP effective date but not later than the expiration date of the Fast Packet SPP being replaced. (N) (N) (N)

- Nonrecurring charges will not be reapplied for existing services. (N)

- If the new Fast Packet SPP arrangement has a service period shorter in length than the time remaining under the service period for the existing Fast Packet SPP arrangement, the change to the new Fast Packet SPP constitutes a disconnection of the existing Fast Packet SPP arrangement for which Termination Liability Charges apply. (N) (N) (N) (N) (N)

****

ACCESS SERVICE

2.4 Payment Arrangements and Credit Allowances (Cont'd)

2.4.8 Optional Payment Plans (Cont'd)

(C) Fast Packet Services Payment Plan (Cont'd) (N)

(7) Renewal Options (N)

(a) When a service period under an existing Fast Packet SPP arrangement is completed, the customer may select a new Fast Packet SPP arrangement at rates and charges in effect on the first day of service under the new Fast Packet SPP arrangement, continue service under the month-to-month rates, or discontinue service with no Termination Liability Charge. If the customer does not elect to either discontinue service or continue service under a new Fast Packet SPP arrangement, service will be continued under month-to-month rates. (N)

(b) Any new rate elements added to a customer's network or changes to existing services at the time of renewal will be subject to all appropriate nonrecurring charges. (N)

(c) When a customer renews a Fast Packet SPP arrangement, the rates and charges in effect on the first day of service of the renewal will apply. (N)

(d) Recognition of previous service will be given to customers who renew an existing Fast Packet SPP arrangement, for all associated rate elements at the same location(s), provided that the length of the new Fast Packet SPP arrangement is equal to or greater than the remaining service period of the original Fast Packet SPP arrangement. (N)

(e) Recognition of previous service back to the actual service date will be given to month-to-month customers who convert to a Fast Packet SPP arrangement. (N)

(f) To determine the appropriate Fast Packet SPP Payment Plan for the renewed arrangement, recognition of service will consist of the sum of months in service of the completed service arrangement and the sum of the months of the proposed service period of the Fast Packet SPP arrangement. For example, a Fast Packet SPP arrangement for a 24 month service period under Payment Plan A is renewed for 16 months with no changes at the end of the 24 month period. The sum of months for the completed and proposed service periods would equal 40 months and would be billed under Payment Plan B. (N)

****

ACCESS SERVICE

2.4 Payment Arrangements and Credit Allowances (Cont'd)

2.4.8 Optional Payment Plans (Cont'd)

(C) Fast Packet Services Payment Plan (Cont'd) (N)

(7) Renewal Options (Cont'd) (N)

(f) (Cont'd) (N)

Another example is a month-to-month customer, in service for 15 (N)
months, who wishes to convert to a 24-month Fast Packet SPP (N)
arrangement with no changes, The combined service period of the (N)
Month-to-Month arrangement and the Fast Packet SPP arrangement is (N)
equal to 39 months which would be billed under Payment Plan B. (N)

(8) Transfer of Service (N)

(a) Service transferred to a new customer at the same location in (N)
accordance with 2.1.2 preceding does not constitute a disconnect of (N)
service or a discontinuance of an existing Fast Packet SPP (N)
arrangement. (N)

(9) Prepayment (N)

(a) Upon entering into a Fast Packet SPP arrangement, the customer may (N)
prepay the outstanding recurring monthly rates in whole or in part (N)
for all rate elements included in the Fast Packet SPP arrangement. (N)
The Company retains full ownership of services in accordance with (N)
2.4.6, preceding. The following conditions apply: (N)

- A prepayment allowance will be applied to the amount prepaid for (N)
each given month equal to 0.6666% per month compounded monthly for (N)
the number of months the payment is advanced. (N)

- The customer may elect the percentage of the monthly rates to be (N)
prepaid, provided however, the same percentage shall apply to all (N)
rate elements included in the Fast Packet SPP arrangement for all (N)
months remaining in the service period. (N)

- This same prepayment percentage will apply in the event the (N)
customer adds services to an existing Fast Packet SPP arrangement (N)
subsequent to the establishment of the service. (N)

****

2.4 Payment Arrangements and Credit Allowances (Cont'd)

2.4.8 Optional Payment Plans (Cont'd)

(C) Fast Packet Services Payment Plan (Cont'd')

(9) Prepayment (Cont'd)

- When a customer who has prepaid recurring monthly rates replaces the existing Fast Packet SPP arrangement with a new Fast Packet SPP arrangement, the customer will be credited with that portion of the prepayment amount, representing a prepayment of the monthly recurring rates remaining in the existing Fast Packet SPP arrangement.

- Customers who prematurely disconnect will have Termination Liability Charges deducted from the unused prepaid balance. The remaining prepaid balance, if any, will be credited to their bill.

(D) Transport Payment Plan (TPP)

(1) General

(a) The regulations and terms specified herein are applicable only to LightGate (a.k.a. BellSouth SPA Point to Point Network), BellSouth Dedicated Ring, SMARTRing (a.k.a. BellSouth SPA Dedicated Ring), BellSouth Native Mode LAN Interconnection Service, and/or BellSouth DS1 Diverse service Special Access (a.k.a. BellSouth SPA) services and BellSouth Wavelength service as indicated in the rate (C)
regulations in Sections 6, 7 and 29 of this tariff. (C)

(b) The TPP allows customers to pay stabilized monthly rates for fixed service periods selected by the customer. The three payment plans offered are as follows:

- Payment Plan A, service periods may be selected from 12 months to 36 months in length.

- Payment Plan B, service periods may be selected from 37 months to 60 months in length.

- Payment Plan C, service periods may be selected from 61 months to 96 months in length.

****

2.4 Payment Arrangements and Credit Allowances (Cont'd)

2.4.8 Optional Payment Plans (Cont'd)

(D) Transport Payment Plan (Cont'd)

(1) General (Cont'd)

(c) Conversions of existing CSPP arrangements for BellSouth DS1 Diverse service, LightGate (a.k.a. BellSouth SPA Point to Point Network), BellSouth Dedicated Ring and/or SMARTRing (a.k.a. BellSouth SPA Dedicated Ring) service(s) to a TPP arrangement must be initiated by the customer.

(d) For conversions to the TPP arrangement, the number of months under the TPP arrangement must equal or exceed the number of months remaining under the CSPP arrangement.

(e) Termination liability charges and nonrecurring charges will not apply when a CSPP customer converts to a TPP arrangement.

(f) When the customer renews a TPP arrangement and the sum of months in service added to the new contract period is greater than the number of months for which the service is available under a TPP, the current Payment Plan C rates will apply.

(g) When the customer orders service to be provided under a TPP arrangement, the customer must designate to the Telephone Company the payment plan desired.

(h) Rates stabilized under a TPP arrangement are exempt from Telephone Company initiated increases, however, decreases for any rate element will automatically be reflected in the rates charged to the customer.

(i) Conversions of BellSouth DS1 Diverse service, BellSouth Wavelength (C)
service, LightGate (a.k.a. BellSouth SPA Point to Point Network) (C)
and/or SMARTRing (a.k.a. BellSouth SPA Dedicated Ring) TPP arrangements to a higher order of CSPP service are allowed.

(2) Application of Rates

(a) The stabilized monthly recurring rates as set forth in Sections 6, 7 and 29 following are set as of the Application Date for BellSouth (C)
DS1 Diverse service, BellSouth Wavelength service, LightGate (C)
(a.k.a. BellSouth SPA Point to Point Network), BellSouth Dedicated Ring, BellSouth Native Mode LAN Interconnection Service and/or SMARTRing service (a.k.a. BellSouth SPA Dedicated Ring), provided that the actual service date does not exceed the later of the following:

(1) the Service Date under a standard service interval, or

(2) the earliest date by which service can be made available to the customer by the Telephone Company.

****

2.4 Payment Arrangements and Credit Allowances (Cont'd)

2.4.8 Optional Payment Plans (Cont'd)

(D) Transport Payment Plan (Cont'd)

(2) Application of Rates (Cont'd)

(b) If the customer desires a service date later than as provided in (a) preceding, the stabilized monthly recurring rates in effect on the service date are applicable.

(3) Additions

(a) Additions of services or rate elements, to existing BellSouth DS1 Diverse service to activate spare or unused capacities, must be activated under the same rate plan as the existing TPP arrangement. LightGate (a.k.a. BellSouth SPA Point to Point Network), BellSouth Dedicated Ring and/or SMARTRing (a.k.a. BellSouth SPA Dedicated Ring) channel interfaces must be activated as set forth in Sections 6 and 7 following.

(4) Disconnects

(a) Except as provided in 2.4.8(D)(4)(b) through (f) following, when a BellSouth DS1 Diverse service, BellSouth Wavelength service, (C)
LightGate (a.k.a. BellSouth SPA Point to Point Network), BellSouth Dedicated Ring, BellSouth Native Mode LAN Interconnection Service and/or SMARTRing (a.k.a. BellSouth SPA Dedicated Ring) rate element is disconnected prior to being in service for a 12-month period, (e.g., the minimum term for a Plan A TPP), the termination liability charge will be derived by multiplying the difference in rates between the current month-to-month rate and the rate for the TPP arrangement selected. For example, a customer subscribes to a TPP for 24 months (Plan A) and terminates service after 10 months. The termination liability charge will be applied by multiplying the number of months in service (10) by the difference between the month-to-month and Plan A monthly rates. With the exception of Renewal Options in 2.4.8. (D)(7) following, a four month minimum service period for BellSouth DS1 Diverse service, BellSouth (C)
Wavelength service, LightGate (a.k.a. BellSouth SPA Point to Point (C)
Network), BellSouth Dedicated Ring and/or SMARTRing (a.k.a. BellSouth SPA Dedicated Ring) and a twelve month minimum service period for BellSouth Native Mode LAN Interconnection will be applicable and all month-to-month regulations will apply.

****

2.4 Payment Arrangements and Credit Allowances (Cont'd)

2.4.8 Optional Payment Plans (Cont'd)

(D) Transport Payment Plan (Cont'd)

(4) Disconnects (Cont'd)

When a BellSouth DS1 Diverse service, BellSouth Wavelength service, (C)
LightGate (a.k.a. BellSouth SPA Point to Point Network), BellSouth
Dedicated Ring, BellSouth Native Mode LAN Interconnection Service
or SMARTRing service (BellSouth SPA Dedicated Ring) TPP customer
disconnects a rate element prior to the 12 month TPP minimum, all
current month-to- month nonrecurring charges associated with the
BellSouth DS1 Diverse service, BellSouth Wavelength service, (C)
LightGate (a.k.a. BellSouth SPA Point to Point Network) system,
BellSouth Dedicated Ring or the SMARTRing service (a.k.a. BellSouth
SPA Dedicated Ring) ring level rate elements will apply. Also, for
SMARTRing service (a.k.a. BellSouth SPA Dedicated Ring) channel
interfaces installed on or after December 2, 1997, the current
month-to-month nonrecurring charges will apply for rate elements
disconnected prior to the 12-month TPP minimum.

****

2.4 Payment Arrangements and Credit Allowances (Cont'd)

2.4.8 Optional Payment Plans (Cont'd)

(D) Transport Payment Plan (Cont'd)

(4) Disconnects (Cont'd)

(a) (Cont'd)
BellSouth DS1 Diverse service rate elements are defined as Local and Interoffice Channels. LightGate system (a.k.a. BellSouth SPA Point to Point Network) rate elements are defined as LightGate (a.k.a. BellSouth SPA Point to Point Network) service Local and Interoffice Channel Systems including SAFT Levels I and II. BellSouth Dedicated Ring and SMARTRing (a.k.a. BellSouth SPA Dedicated Ring) service ring level rate elements are defined as following: Local Channel, Interoffice Channel, Internodal Channel, Alternate Central Office Channel, Customer Node and Central Office Node. BellSouth Wavelength service rate elements are defined as (C)
Wavelength Channels. (C)

(b) Except as provided in Section 2.4.8(D)4 (c) through (f) following, when a BellSouth DS1 Diverse service, BellSouth Wavelength service, (C)
LightGate (a.k.a. BellSouth SPA Point to Point Network), BellSouth Dedicated Ring, BellSouth Native Mode LAN Interconnection Service or SMARTRing (a.k.a. BellSouth SPA Dedicated Ring) TPP customer disconnects services or rate elements prior to the minimum number of months for the plan period selected, termination liability charges will apply. The termination liability charge will be derived at the time of disconnection by taking the difference between the rate for the TPP period for which the customer subscribed, and the rate for the TPP period that the customer's completed service would otherwise qualify, and multiplying the difference by the number of months service the customer completed under a TPP. For example, a customer subscribes to a TPP for 73 months (Plan C) and terminates service after 20 months (Plan A). The termination liability charge will be applied by multiplying the number of months in service (20) by the difference between the Plan A and Plan C monthly rates. When a BellSouth DS1 Diverse service, BellSouth Wavelength service, LightGate (a.k.a. BellSouth SPA Point (C)
to Point Network), BellSouth Dedicated Ring, BellSouth Native Mode LAN Interconnection Service or SMARTRing (a.k.a. BellSouth SPA Dedicated Ring) customer disconnects service after the minimum number of months for the TPP arrangement selected but prior to the actual expiration date of the TPP arrangement, termination liability charges do not apply.

(M)

Certain material previously appearing on this page now appears on Original Page 2-49.0.12.1.

****

ACCESS SERVICE

2 - General Regulations (Cont'd)

2.4 Payment Arrangements and Credit Allowances (Cont'd) (N)

2.4.8 Optional Payment Plans (Cont'd) (N)

(D) Transport Payment Plan (Cont'd) (N)

(4) Disconnects (Cont'd) (N)

(c) When a TPP arrangement is disconnected prior to the expiration of a plan period due to a customer requested change to a higher order of service at the same location, or to expand or upgrade an existing service, termination liability charges will not apply when: (M)

(1) the customer has completed at least 6 months of the originally selected TPP service period, and (M)

(2) the service period of the new arrangement for the new service is equal to or longer than the remaining service period of the disconnected arrangement, and (M)

(3) the service orders to install the new service and disconnect the old service are related together and received by the Telephone Company at the same time, and there is no lapse in service between installation of the higher order of service and disconnection of the existing service, and (M)

Certain material now appearing on this page previously appeared on 5th Revised Page 2-49.0.12 and 6th Revised Page 2-49.0.13.

****

2.4 Payment Arrangements and Credit Allowances (Cont'd)

2.4.8 Optional Payment Plans (Cont'd)

(D) Transport Payment Plan (Cont'd)

(4) Disconnects (Cont'd)

(c) (Cont'd)

(M)

(4) the capacity of the new service is equal to or greater than the existing service. For converting LightGate service (a.k.a. BellSouth SPA Point to Point Network) to SMARTPath DS3 Transport service (a.k.a. BellSouth SPA DS3 Shared Ring), the capacity of the LightGate service (a.k.a. BellSouth SPA Point to Point Network) is considered to be the quantity of DS3s activated on the LightGate service (a.k.a. BellSouth SPA Point to Point Network).

For the purposes of determining a higher order of service in all payment plans, the following ranking will be used (Analog Voice Grade (a.k.a. BellSouth SPA DSO VG) service=lowest, SMARTRing (a.k.a. BellSouth SPA Dedicated Ring)=highest):

1. Analog Voice Grade (a.k.a. BellSouth SPA DSO VG) services
2. DSO (a.k.a. BellSouth SPA DSO Digital Data) Services
3. DS1 (a.k.a. BellSouth SPA DS1) Services
4. BellSouth DS1 Diverse Service
5. SMARTPath service (a.k.a. BellSouth SPA DS1 Shared Ring)
6. BellSouth Wavelength Service (N)
7. LightGate service (a.k.a. BellSouth SPA Point to Point Network) (T)
8. BellSouth SPA Managed Shared Network Service (T)
9. SMARTPath DS3 Transport service (a.k.a. BellSouth SPA DS3 Shared Ring) (T)
10. SMARTRing service (a.k.a. BellSouth SPA Dedicated Ring)/SMARTGate service (a.k.a. BellSouth SPA Managed Shared Ring Network)/BellSouth Managed Shared Ring service/BellSouth Dedicated Ring (T)

(d) A termination liability charge will not apply to disconnects of channel interfaces associated with LightGate (a.k.a. BellSouth SPA Point to Point Network), BellSouth Dedicated Ring and/or SMARTRing service(s) (a.k.a. BellSouth SPA Dedicated Ring).

(e) Disconnects, moves, or rearrangements involving the removal of the following BellSouth Dedicated Ring and SMARTRing service (a.k.a. BellSouth SPA Dedicated Ring) rate elements, local channel, interoffice channel, customer node and central office node, to allow the placement of additional nodes and channels for existing customers where the total number of nodes does not decrease, will not be subject to termination liability charges.

Certain material previously appearing on this page now appears on Original Page 2-49.0.12.1.

****

2.4 Payment Arrangements and Credit Allowances (Cont'd)

2.4.8 Optional Payment Plans (Cont'd)

(D) Transport Payment Plan (Cont'd)

(4) Disconnects (Cont'd)

(f) A change of jurisdiction from interstate to intrastate service constitutes a disconnection of service for which termination charges are applicable. However, if such service continues between the same serving locations, and the customer enters into a new TPP arrangement in the intrastate jurisdiction for the same or larger service capacity and associated rate elements for a service period equal to or greater than the service period remaining under the interstate TPP arrangement, no interstate termination liability charge will be applicable.

(5) Moves of Service Under TPP

(a) Moves to a different building will be treated as a discontinuance and start of service and all associated nonrecurring charges will apply as stated in 7.4.5, 7.5.9, 23.5, 29.1.7 and 29.1.9 except as provided in 2.4.8(D)(5)(c) following. A four month minimum service period must be satisfied for all service rate elements serving the original building location. (C)

(b) Moves of service within the same building will not constitute a disconnection of service for purposes of the application of termination liability charges. Current month-to-month nonrecurring charges specified in 7.4.5, 7.5.9, 23.5, 29.1.7 and 29.1.9 are applicable. (C)

(c) Termination Liability Charges will not apply to customer requests for moves of service to a different building subject to the following conditions:

- The move from the original location to the new location must be completed within thirty days of the original premises disconnect date. For LightGate systems (a.k.a. BellSouth SPA Point to Point Network), the new customer premises must be served by the same serving wire center as the original location.

- No lapse in billing will occur for moves of service under a TPP arrangement.

- Orders to disconnect the existing service and reestablish it at the new location must be related together and received by the Telephone Company at the same time.

2.4 Payment Arrangements and Credit Allowances (Cont'd)

2.4.8 Optional Payment Plans (Cont'd)

(D) Transport Payment Plan (Cont'd)

(5) Moves of Service Under TPP (Cont'd)

(c) (Cont'd)

- Any additions made at the new location will be handled in accordance with (3) preceding.

- All regulations and charges for changes made to the service coincident with the move will apply.

- All appropriate nonrecurring charges for moves of service as specified in 7.4.5, 7.5.9, 23.5, 29.1.7 and 29.1.9 following will apply. (C)

Any rate elements or quantities for local channels, interoffice channels, wavelength channels and/or optional features and functions from the original location that are not reestablished at the new location will be subject to applicable Termination Liability Charges. (C)

(6) Requests for Changes in Length of Service Period

(a) Subsequent to the establishment of a TPP arrangement, and prior to the completion of the selected service period for that arrangement, the TPP arrangement may be replaced by a new TPP arrangement at rates and charges in effect on the first day of service under the new TPP arrangement, subject to the following conditions:

- No credit will be given for payments made under the original TPP arrangement, except for credits allowed under 2.4.8(D)(9)(A) following.

- The service period selected for the new TPP arrangement begins on the new TPP effective date but not later than the expiration date of the TPP being replaced.

- Nonrecurring charges do not apply for existing services.

2.4 Payment Arrangements and Credit Allowances (Cont'd)

2.4.8 Optional Payment Plans (Cont'd)

(D) Transport Payment Plan (Cont'd)

(6) Requests for Changes in Length of Service Period (Cont'd)

(a) (Cont'd)

- If the new TPP arrangement has a service period shorter in length than the time remaining under the service period for the existing TPP arrangement, the change to the new TPP arrangement constitutes a disconnection of the existing TPP arrangement for which termination liability charges apply.

(b) Subsequent to the establishment of a TPP arrangement, and prior to the completion of the selected service period for that arrangement, the TPP arrangement may be extended subject to the following conditions: (N)

- The start date of the TPP is not changed, however, with an extension the customer selects a new TPP service period (i.e., the number of months associated with the customer's TPP) that is greater than what presently exist for the current TPP. (N)

- The maximum service period that may be selected for an extension is 96 months. After 96 months, a customer must establish a new TPP arrangement. (N)

- If the new service period selected with an extension results in a change of Payment Plans, then the rates associated with the new Payment Plan will be effective on the first day of service under the extended TPP. For example, if a customer presently has a 36-month TPP arrangement, which is associated with Payment Plan A rates, and extends his service period to 61 months, which is associated with Payment Plan C rates, the Plan C rates will be effective on the first day of the extended TPP. (N)

- If a TPP arrangement that has been extended is disconnected prior the expiration of the extended service period, termination liability charges will be based on the rates associated with the extended TPP arrangement at the time of the disconnect. For example, if a customer's TPP that has been extended and is receiving Plan C rates at the time the TPP is disconnected, then Plan C rates will be used to determine the applicable termination liability. (N)

(M)

Certain material previously appearing on this page now appears on Original Page 2-49.0.16.1.

All BellSouth marks contained herein and as set forth in the trademarks and servicemarks section of this Tariff are owned by BellSouth Intellectual Property Corporation.
****

ACCESS SERVICE (N)

2 - General Regulations (Cont'd) (N)

2.4 Payment Arrangements and Credit Allowances (Cont'd) (N)

2.4.8 Optional Payment Plans (Cont'd) (N)

(D) Transport Payment Plan (Cont'd) (N)

(7) Renewal Options (M)

(a) When a service period under an existing CSPP or TPP arrangement is completed, the customer may select a new TPP arrangement at rates and charges in effect on the first day of service under the new TPP arrangement, continue service under the month-to-month rates, or discontinue service with no termination liability charge. If the customer does not elect to either discontinue service or continue service under a new TPP arrangement, service will be continued under month-to-month rates. The TPP customer of record will have a 60-day grace period after which current month-to-month rates will apply. The stabilized monthly recurring rates as set forth in Sections 7 and 29 following remain in effect during the 60-day grace period. (M)

(b) Any new services added to a customer's network or changes to existing services at the time of renewal will be subject to all appropriate nonrecurring charges and four month minimum service period requirements. (M)

(c) When a customer renews a TPP arrangement, the rates and charges in effect on the first day of service of the renewal will apply. (M)

(d) To determine the appropriate TPP Payment Plan for the renewed arrangement, recognition of service will consist of the sum of months in service of the completed service arrangement and the sum of months of the proposed service period of the TPP arrangement. (M)

(e) Recognition of previous service will be given to customers who renew an existing TPP arrangement, for the same or larger system(s) and all associated rate elements at the same location(s), provided that the length of the new TPP arrangement is equal to or greater than the remaining service period of the original TPP arrangement. Recognition for satisfying the four month service period as appropriate for the service will be given for renewals of the same size channels, systems, rings, and all associated rate elements. Conversion to larger systems and rings will incur new four month minimum service requirements. (M)

Certain material now appearing on this page previously appeared on 1st Revised Page 2-49.0.16.

All BellSouth marks contained herein and as set forth in the trademarks and servicemarks section of this Tariff are owned by BellSouth Intellectual Property Corporation.
****

2.4 Payment Arrangements and Credit Allowances (Cont'd)

2.4.8 Optional Payment Plans (Cont'd)

(D) Transport Payment Plan (Cont'd)

(7) Renewal Options (Cont'd)

(f) Recognition of previous service will be given to month-to-month customers who convert to a TPP arrangement, for the same or larger system(s) and all associated rate elements at the same location(s), provided the four month minimum service period for that service has been met.

(g) Recognition of previous service will be given to TPP customers who convert from CSPP arrangements provided the customer is the original customer of record at the time of transfer.

(h) When an existing BellSouth DS1 Diverse service, BellSouth Wavelength service, LightGate (a.k.a. BellSouth SPA Point to Point Network), BellSouth Dedicated Ring, BellSouth Native Mode LAN Interconnection Service and/or SMARTRing (a.k.a. BellSouth SPA Dedicated Ring) customer has completed the selected TPP commitment period and the service reverts to month-to-month service, only the contiguous month-to-month service adjacent to the start date of the (C)
new TPP will receive recognition for determining the appropriate (C)
TPP arrangement or any subsequent TPP arrangement.

(8) Transfer of Service

(a) Service transferred to a new customer at the same location in accordance with 2.1.2 preceding does not constitute a disconnect of service or a discontinuance of an existing TPP arrangement.

(9) Prepayment

(a) Upon entering into a TPP arrangement, the customer may prepay the outstanding recurring monthly rates in whole or in part for all rate elements included in the TPP arrangement. The following conditions apply:

All BellSouth marks contained herein and as set forth in the trademarks and servicemarks section of this Tariff are owned by BellSouth Intellectual Property Corporation.
****

2.4 Payment Arrangements and Credit Allowances (Cont'd)

2.4.8 Optional Payment Plans (Cont'd)

(D) Transport Payment Plan (Cont'd)

(9) Prepayment (Cont'd)

- A prepayment allowance will be applied to the amount prepaid for each given month equal to 0.6666% per month compounded monthly for the number of months the payment is advanced.

- The customer may elect the percentage of the monthly rates to be prepaid, provided however, the same percentage shall apply to all rate elements included in the TPP arrangement for all months remaining in the service period.

- This same prepayment percentage will apply in the event the customer adds services to an existing TPP arrangement subsequent to the establishment of the service.

- When a customer who has prepaid recurring monthly rates replaces the existing TPP arrangement with a new TPP arrangement, the customer will be credited with that portion of the prepayment amount, representing a prepayment of the monthly recurring rates remaining in the existing TPP arrangement.

- Customers who disconnect service and incur termination liability charges, such charges shall be deducted from the unused prepaid balance. The remaining prepaid balance, if any, will be credited to their bill.

(10) Automatic Extension of TPP Arrangements (N)

(a) For the period beginning on January 13, 2001 through January 12, 2002, customers that complete a TPP arrangement will receive an automatic 12-month extension of their TPP arrangement. With this automatic extension, the customer's service will be continued under TPP at the rates and charges associated with the payment plan that is being extended. Customers that do not wish to utilize the benefits of the automatic extension may request that their TPP arrangement be terminated, without penalty, at any time during the 12-month period associated with their extension. (N)

At the end of the 12-month extension, or at the time that a customer indicates that they do not desire to continue under the 12-month extension, the standard provisions associated with the completion of a TPP arrangement apply. (N)

2.4 Payment Arrangements and Credit Allowances (Cont'd)

2.4.8 Optional Payment Plans (Cont'd)

(E) BellSouth Transport Savings Plan (TSP)

(1) Effective June 24, 2004, the BellSouth Transport Savings Plan is not available for new commitment plans. Existing TSP customers may keep their existing arrangements pursuant to the terms and conditions as follows. (N)(x) (N)(x) (N)(x) (N)(x)

The BellSouth Transport Savings Plan (TSP) allows customers to receive credits applied to their bill in exchange for having maintained a specified level of Special Access and Switched Access transport services recurring billing for a specified period of time. The credits provided under this plan apply to eligible transport services. Eligible transport services are: Voice Grade (a.k.a. BellSouth SPA DS0 VG) Service, Digital Data Access Service (a.k.a. BellSouth SPA DS0 Digital Data), DS1 High Capacity (a.k.a. BellSouth SPA DS1) Service, Alternate Serving Wire Center Service, LightGate Service (a.k.a. BellSouth SPA Point to Point Network), BellSouth SPA Managed Shared Network Service, Self-healing Multi-nodal Alternate Route Topology Ring (SMARTRing Service) (a.k.a. BellSouth SPA Dedicated Ring), excluding Surveillance and Reconfiguration rate, SMARTGate Service (a.k.a. BellSouth SPA Managed Shared Ring Network) elements and BellSouth Native Mode LAN Interconnection Service as set forth in Section 7 of this Tariff, BellSouth Dedicated Ring, excluding the Surveillance rate element, BellSouth Managed Shared Ring Service, BellSouth SWA DS0, BellSouth SWA DS1, BellSouth SWA Managed Shared Network Service, and BellSouth SWA DS3 services as set forth in Section 6 of this Tariff and BellSouth Wavelength service as set forth in Section 29 of this tariff..

(2) The eligible transport services as set forth in 2.4.8(E)(1) preceding that are included in a Channel Services Payment Plan (CSPP), a Transport Payment Plan (TPP) or an Area Commitment Plan (ACP) may also be included in a BellSouth TSP or vice versa.

(3) To subscribe to the BellSouth TSP the customer must have had SPA or SWA Dedicated Transport service, as set forth in 2.4.8(E)(5) following for the six month period prior to enrolling. When the customer subscribes to the BellSouth TSP it must identify to the Telephone Company all Access Customer Name Abbreviations (ACNAs) to be included in the BellSouth TSP. Any additions after the BellSouth TSP is established will be handled as a merger or acquisition as set forth in 2.4.8(E)(11) and 2.4.8(E)(12) following.

(M)(x)

Certain material previously appearing on this page now appears on Original Page 2-49.0.18.1.1.
(x) Issued to become effective on June 24, 2004 under authority of Special Permission No. 04-050.

All BellSouth marks contained herein and as set forth in the trademarks and servicemarks section of this Tariff are owned by BellSouth Intellectual Property Corporation.

****

ACCESS SERVICE (N)(x)

2 - General Regulations (Cont'd) (N)(x)

2.4 Payment Arrangements and Credit Allowances (Cont'd) (N)(x)

2.4.8 Optional Payment Plans (Cont'd) (N)(x)

(E) BellSouth Transport Savings Plan (TSP) (Cont'd) (N)(x)

(4) The term of a BellSouth TSP is five (5) years. The BellSouth TSP effective service date will be negotiated by the Telephone Company and the customer. Credits will begin with the first bill period following the negotiated service date of the BellSouth TSP. At the end of a five (5) year TSP term, in-lieu of establishing a new TSP agreement and the associated termination schedule, a customer can receive automatic extensions of their existing TSP term in one-year increments. During an extension period, the customer will continue to receive the credits associated with their Billing Volume Band, based on the Plan Year 5 credit percentage. Also during an extension period, a customer may upgrade to the next higher Billing Volume Band and receive the Plan Year 5 credit percentage for the higher Billing Volume Band. During an automatic extension period, the termination schedule will be reduced as described in 2.4.8(E)(10) following. (N)(x)

All BellSouth marks contained herein and as set forth in the trademarks and servicemarks section of this Tariff are owned by BellSouth Intellectual Property Corporation.
****

2.4 Payment Arrangements and Credit Allowances (Cont'd)

2.4.8 Optional Payment Plans (Cont'd)

(E) BellSouth Transport Savings Plan (TSP) (Cont'd)

(5) For customers subscribing to the BellSouth TSP, the Volume Band will be determined based on the billing for the most recent six months for the total SPA and SWA dedicated transport services which billing is then annualized (i.e., multiplied by two). The Volume Bands are defined in 2.4.8(E)(7). Total SPA and SWA dedicated transport services include the eligible transport services as set forth in 2.4.8(E)(1) and the following: Metallic (a.k.a. BellSouth Metallic) Service, Telegraph Grade (a.k.a. BellSouth Telegraph) Service, Program Audio (a.k.a. BellSouth SPA Program Audio) Service, Video (a.k.a. BellSouth SPA Video) Service, Wideband Analog (a.k.a. BellSouth SPA Wideband Analog) Service, Dry Fiber, Derived Data Channel (a.k.a. BellSouth SPA Derived Data Channel) Service, SMARTPath Service (a.k.a. BellSouth SPA DS1 Shared Ring), FlexServ (a.k.a. BellSouth SPA Customer Reconfiguration) Service, SMARTGate Service (a.k.a. BellSouth SPA Managed Shared Ring Network), Commercial Quality Video (a.k.a. BellSouth SPA Commercial Quality Video) Service, SMARTPATH DS3 Transport Service (a.k.a. BellSouth SPA DS3 Shared Ring), Uncompressed Switched Video (a.k.a. BellSouth SPA Uncompressed Switched Video) Service, 70 MHz Transport (a.k.a. BellSouth SPA 70 MHz Transport) Service, DS3 Digital Video (a.k.a. BellSouth SPA DS3 Digital Video) Service, BellSouth SPA Modular Video Transport Service, Surcharge for Special Access (a.k.a. BellSouth SPA) Service and Message Station Equipment Recovery Charge, WATS Access Line (a.k.a. BellSouth SPA WATS Line) Service as set forth in Section 7 of this Tariff, and BellSouth ADSL Service and BellSouth (C)
Session Based DSL Service as set forth in Section 28 of this Tariff, (C)
BellSouth Managed Shared Ring Service as set forth in Section 6 of this Tariff, BellSouth Directory Transport as set forth in Section 9 of this Tariff, Federal Government Transport Plan as set forth in Section 10 of this Tariff and the Exchange Access Frame Relay Service (a.k.a. BellSouth Exchange Access Frame Relay Service) as set forth in Section 21 of this Tariff.

(6) When a customer subscribes to the BellSouth TSP, a volume band will be established based on twice the customer's most recent six months billing (historical billing). The customer agrees to maintain this commitment level of billing for the duration of their BellSouth TSP plan. Except 2.4.8(E)(9), 2.4.8(E)(11) and 2.4.8(E)(12) the customer must maintain the greater of 90 percent of its historical billing or the minimum billing associated with the customer volume band.

All BellSouth marks contained herein and as set forth in the trademarks and servicemarks section of this Tariff are owned by BellSouth Intellectual Property Corporation.
****

2.4 Payment Arrangements and Credit Allowances (Cont'd)

2.4.8 Optional Payment Plans (Cont'd)

(E) BellSouth Transport Savings Plan (TSP) (Cont'd)

(7) The following are the Volume Bands and associated credits:

(a) The following Volume Bands apply to TSP arrangements established prior to December 19, 2001. (Note 1) (C) (C)

Volume Bands (Total Annual SPA & SWA Dedicated Transport Billing)	Billing Credit Plan Year 1	Plan Year 2	Plan Year 3	Plan Year 4	Plan Year 5
$3M to $10M	1.0%	1.5%	2.0%	2.5%	3.0%
>$10M to $100M	2.0%	3.0%	4.0%	4.5%	5.0%
>$100M to $300M	3.0%	4.5%	6.0%	7.5%	9.0%
>$300M to $500M	4.5%	6.0%	7.0%	8.5%	10.0%
>$500M	5.0%	7.0%	9.0%	10.5%	12.0%

(b) The following Volume Bands apply to TSP arrangements established on or after December 19, 2001. (Note 2) (N) (N)

Volume Bands (Total Annual SPA & SWA Dedicated Transport Billing)	Billing Credit Plan Year 1	Plan Year 2	Plan Year 3	Plan Year 4	Plan Year 5	(N) (N) (N) (N) (N)
$3M to $10M	1.0%	1.5%	2.0%	2.5%	3.0%	(N)
>$10M to $100M	2.0%	3.0%	4.0%	4.5%	5.0%	(N)
>$100M to $300M	3.0%	4.5%	6.0%	7.5%	9.0%	(N)
>$300M to $500M	4.5%	6.0%	7.0%	8.5%	10.0%	(N)
>$500M to $600M	5.0%	7.0%	9.0%	10.5%	12.0%	(N)
>$600M	5.5%	7.5%	9.5%	11.0%	12.5%	(N)

Note 1: Customers with TSP arrangements established prior to December 19, 2001 that desire to upgrade to a higher Billing Volume Band will upgrade based on their existing TSP arrangement's Billing Credit schedule. (N) (N) (N) (N)

Note 2: Customers with TSP arrangements established prior to December 19, 2001 that desire to convert to the Volume Bands that are effective on or after December 19, 2001 must extend the time period of their existing arrangement by two years. (N) (N) (N) (N)

(M)

****

Certain material previously appearing on this page now appears on Second Revised Page 2-49.0.18.4.

****

2.4 Payment Arrangements and Credit Allowances (Cont'd)

2.4.8 Optional Payment Plans (Cont'd)

(E) BellSouth Transport Savings Plan (TSP) (Cont'd)

(8) Each month, the billing for the eligible transport services included in the BellSouth TSP will be adjusted via a credit. The monthly credit will be equal to the previous months total billing for the eligible transport services, less adjustments for the Managed Shared Network Service, times the appropriate percentage credit set forth in 2.4.8(E)(7). A shortfall charge will be applicable if the customer's annual SPA and SWA dedicated transport billing is less than the amount determined in 2.4.8(E)(6) preceding during a given Plan Year. The Telephone Company shall bill the customer the difference between the actual billed revenue for the preceding twelve month period and its billing commitment as determined in 2.4.8(E)(6). (M)

(9) Customers may request to upgrade to the next higher Volume Band tier when the previous six months of monthly total SPA and SWA dedicated transport services recurring billing annualized, achieves the next higher Volume Band tier threshold. The customer must maintain 90 percent of their new billing for the most recent six months annualized or if such amount is less than the minimum billing associated with higher volume band that corresponds to the customer's annualized billing calculated pursuant to 2.4.8(E)(5), the customer must maintain the minimum of the higher volume band for the remainder of the plan term. The credit level would be based on the new Volume Band and the plan year associated with the customer's BellSouth TSP agreement. (M)

(M)

Certain material appearing on this page previously appeared on First Revised Page 2-49.0.18.3.
Certain material previously appearing on this page now appears on Second Revised Page 2-49.0.18.5.

****

2.4 Payment Arrangements and Credit Allowances (Cont'd)

2.4.8 Optional Payment Plans (Cont'd)

(E) BellSouth Transport Savings Plan (TSP) (Cont'd)

(10) If the customer terminates the BellSouth TSP before the end of year one (1), 100 percent of the credits received under the plan since initiation of the plan will be billed to the customer. If the plan is terminated in year two (2) 90 percent of the credits received under the plan since initiation of the plan will be billed to the customer. If the plan is terminated in the third (3) year, 75 percent of the credit received under the plan since initiation of the plan will be billed to the customer. If the plan is terminated in the fourth (4) year, 45 percent of the credits received under the plan since initiation of the plan will be billed to the customer. If the plan is terminated in the fifth (5) year, 25 percent of the credits received under the plan since initiation of the plan will be billed to the customer. For plans that receive automatic one year extensions, as described in 2.4.8(E)(4) preceding, the factor utilized to determine the percent of the credits received that will be billed to the customer will be the fifth (5) year factor of 25 percent, minus 5 percent per year of automatic extension through year nine (9) (i.e., 20 percent in year six (6), 15 percent in year seven (7), 10 percent in year eight (8) and 5 percent in year nine (9)). For year ten (10) and beyond, the TSP termination amount will equal the amount of TSP credit applied during the year the agreement is terminated. If a customer terminates the BellSouth TSP, the customer will not be eligible to initiate a new BellSouth TSP for a period of six months from the date the BellSouth TSP was terminated. (M) (M) (M) (M) (M) (M) (M) (M) (M) (M) (C) (C) (C) (C) (C) (C) (C) (C) (M) (M)

(11) In the event of a merger or acquisition and both companies have existing BellSouth TSPs then the customer will have the option of continuing both plans or merging both plans into one. If the customer chooses to merge both plans into one, then the plan of the company making the acquisition will remain in effect and the revenues of the acquired company will be combined with those of the company making the acquisition. A new commitment level will be established based on these combined revenues, but can be no lower than the commitment level of the acquiring company.

If the company resulting from the merger or acquisition chooses not to continue the plan to its expiration date, early termination provisions set forth in 2.4.8(E)(10) preceding.

(12) If only one company has a BellSouth TSP, then the customer will have the option of continuing the existing plan as is or adding the new company to the existing plan. If the customer chooses to add the new company to the existing plan, then the existing plan will remain in effect and the revenues of the company will be combined with those of the existing company to determine the credit bands and commitment level. A new commitment level will be established based on these combined revenues, but can be no lower than the original commitment level. Growth discounts will be based on the combined revenues of both companies.

Certain material appearing on this page previously appeared on First Revised Page 2-49.0.18.4.

****

2.4 Payment Arrangements and Credit Allowances (Cont'd)

2.4.8 Optional Payment Plans (Cont'd)

(F) BellSouth Fast Packet Savings Plan

(1) The BellSouth Fast Packet Savings Plan (FSP) allows customers to receive credits applied to their bill in exchange for making a commitment to maintain a minimum level of total Fast Packet Services monthly recurring billing (defined in 2.4.8(F)(3) following) for a specified period of time.

The credits provided under a BellSouth FSP agreement are applied to eligible Fast Packet Services and BellSouth Native Mode LAN Interconnection Services. The monthly rates and nonrecurring charges[1] for the following Fast Packet Services, BellSouth Native Mode LAN Interconnection Service and BellSouth DSL Service (these credits do not apply to Low Speed ADSL Services except as described below) are eligible for credit when subscribed to on a month-to-month basis: (S)(x) (S)(x) (S)(x)

- BellSouth Exchange Access Frame Relay Service
- BellSouth Exchange Access Asynchronous Transfer Mode Service
- BellSouth Managed Shared Frame Relay Service
- BellSouth Managed Shared Asynchronous Transfer Mode Service
- BellSouth Network Visibility Service (excluding Service Establishment Charge and Management Access Interface Charges)
- BellSouth Native Mode LAN Interconnection Service
- BellSouth DSL Service (768Kbps x 512Kbps Low Speed ADSL Service, High Speed ADSL Services and Enterprise DSL offerings only) (S)(x) (S)(x)

(2) The Fast Packet services as set forth in 2.4.8(F)(1) preceding that are included in a Fast Packet Services Payment Plan (FPSPP, as provided in 2.4.8(C)) will not receive BellSouth FSP credits. Monthly recurring billing for such services under a Fast Packet Services Payment Plan shall, however, count towards the customer's Total Fast Packet Services Monthly Recurring Billing (referred to as qualifying revenues) for a BellSouth FSP as set forth in 2.4.8(F)(3) following.

The BellSouth Native Mode LAN Interconnection Services as set forth in 2.4.8(D)(1) preceding that are included in a Transport Payment Plan (TPP), as provided in 2.4.8(D), will not receive BellSouth FSP credits. Monthly recurring billing for such services shall, however, count towards the customer's Total Fast Packet Services Monthly Recurring Billing (referred to as qualifying revenues) for a BellSouth FSP as set forth in 2.4.8(F)(3) following.

Note 1: Effective November 14, 2001, FSP discount credits also apply to nonrecurring billing for eligible services for a customer under a FSP agreement. For a customer with an existing FSP agreement, FSP credit adjustments are not applicable for nonrecurring billing prior to November 14, 2001.

(x) Reissued to correct the effective date to be January 9, 2004.

All BellSouth marks contained herein and as set forth in the trademarks and servicemarks section of this Tariff are owned by BellSouth Intellectual Property Corporation.
****

2.4 Payment Arrangements and Credit Allowances (Cont'd)

2.4.8 Optional Payment Plans (Cont'd)

(F) BellSouth Fast Packet Savings Plan (Cont'd)
BellSouth DSL Services that are not included in an FSP will not receive (S)(x)
BellSouth FSP credits. Monthly recurring billing for such services (S)(x)
shall, however, count towards the customer's Total Fast Packet Services (S)(x)
Monthly Recurring Billing (referred to as qualifying revenues) for a (S)(x)
BellSouth FSP as set forth in 2.4.8(F)(3) following. (S)(x)

(3) The customer's Total Fast Packet Services Monthly Recurring Billing, referred to hereafter as qualifying revenues, will be utilized to establish the appropriate BellSouth FSP credit schedule which will be applied to the customer's eligible Fast Packet Service billing as set forth in 2.4.8(F)(1) preceding. A customer's qualifying revenues is defined to include their monthly recurring billing[1] for the following services:

- Eligible Fast Packet Services (as set forth in 2.4.8(F)(1))
- BellSouth Exchange Access Frame Relay Service under FPSPP
- BellSouth Exchange Access Asynchronous Transfer Mode Service under FPSPP
- BellSouth Exchange Access Connectionless Data Service under FPSPP or Month-to-Month
- BellSouth ADSL Service
- BellSouth Native Mode LAN Interconnection Service
- Eligible BellSouth Transport Services:
  - WATS Access Line (WAL) (a.k.a. BellSouth WATS Line) Service
  - DS1 High Capacity (a.k.a. BellSouth SPA DS1) Service
  - High Capacity (a.k.a. BellSouth SPA High Capacity)
  - LightGate Service (a.k.a. BellSouth SPA Point to Point Network)
  - Digital Data Access Service (a.k.a. BellSouth SPA DSO Digital Data)
  - Self-healing Multi-nodal Alternate Route Topology Ring (SMARTRing Service) (a.k.a. BellSouth SPA Dedicated Ring)
  - Voice Grade (a.k.a. BellSouth SPA DSO VG) Service
  - Program Audio (a.k.a. BellSouth SPA Program Audio) Service
  - Analog Data Access (a.k.a. BellSouth SPA DSO VG) Service
  - SMARTPath Service (a.k.a. BellSouth SPA DS1 Shared Ring)
  - SMARTPath DS3 Transport Service (a.k.a. BellSouth SPA DS3 Shared Ring)
  - SMARTGate Service (a.k.a. BellSouth SPA Managed Shared Ring Network)
  - FlexServ (a.k.a. BellSouth SPA Customer Reconfiguration) Service
  - BellSouth SPA Managed Shared Network Service
  - BellSouth SWA Transport
  - BellSouth SWA Managed Shared Network Service

Note 1: While nonrecurring charges for eligible services receive discounts under an FSP agreement, nonrecurring charge billing does not count as "qualifying" revenue towards a customer's minimum monthly revenue commitment.

(x) Reissued to correct the effective date to be January 9, 2004.

All BellSouth marks contained herein and as set forth in the trademarks and servicemarks section of this Tariff are owned by BellSouth Intellectual Property Corporation.
****

ACCESS SERVICE (N)

2 - General Regulations (Cont'd) (N)

2.4 Payment Arrangements and Credit Allowances (Cont'd) (N)

2.4.8 Optional Payment Plans (Cont'd) (N)

(F) BellSouth Fast Packet Savings Plan (Cont'd) (N)

The following percentages of total monthly recurring billing for (N)
eligible BellSouth Transport Services (as set forth in 2.4.8(F)(3) (N)
previously) will count as qualifying revenue: (N)
- 10% when a customer signs a Plan A term. (N)
- 25% when a customer signs a Plan B term. (N)
- 35% when a customer signs a Plan C or Plan D term. (N)

Additionally, a customer must maintain at least 75% of its existing Fast (N)
Packet Services monthly recurring billing during the FSP interim period (N)
(as set forth in 2.4.8(F)(10) following) to allow eligible BellSouth (N)
Transport Services to count as qualifying revenue. (N)

(4) The lengths of the term plans available for a BellSouth FSP agreement (M)
are as follows: (M)

- Plan A (36 to 59 Months) (M)
- Plan B (60 to 83 Months) (M)
- Plan C (84 to 143 Months) (M)
- Plan D (144 Months)[1] (T)(M)

Note 1: The Plan D term is only available with a $2,000,000 Minimum (T)(M)
Monthly Revenue Commitment level. (M)

Certain material now appearing on this page previously appeared on 2nd Revised Page 2-49.0.18.6.1.

****

2.4 Payment Arrangements and Credit Allowances (Cont'd)

2.4.8 Optional Payment Plans (Cont'd)

(F) BellSouth Fast Packet Savings Plan (Cont'd)

(5) The following table provides the minimum monthly revenue commitment levels for a customer's qualifying revenues under a BellSouth FSP agreement[1]. The customer specifies their minimum monthly revenue commitment level (hereinafter referred to as monthly revenue commitment or revenue commitment) and the term plan for their BellSouth FSP agreement. Based upon these two parameters, a specific schedule of credits applies during their BellSouth FSP agreement. Each credit schedule contains the credit percentages applicable to the month-to-month rates and nonrecurring charges for eligible Fast Packet Services defined in 2.4.8(F)(1). The credit schedules are identified by: an alpha character that identifies the term plan, and a numeric character that identifies the customer's minimum monthly revenue commitment level. Credit schedules are provided following in 2.4.8(F)(6).

	Credit Schedule			
Minimum Monthly Revenue Commitment Level	Plan A Term 36 - 59 Months	Plan B Term 60 - 83 Months	Plan C Term 84 - 143 Months	Plan D Term 144 Months
$ 750,000	Schedule 0A	Schedule 0B	Schedule 0C	-
$ 2,000,000	Schedule 1A	Schedule 1B	Schedule 1C	Schedule 1D
$ 5,000,000	Schedule 2A	Schedule 2B	Schedule 2C	-
$ 10,000,000	Schedule 3A	Schedule 3B	Schedule 3C	

(M)

Note 1: Only monthly recurring billing for qualifying services is used in determining a customer's monthly revenue which applies towards their minimum monthly revenue commitment; nonrecurring billing for qualifying services does not apply.

Certain material previously appearing on this page now appears on Original Page 2-49.0.18.7.0.1.

All BellSouth marks contained herein and as set forth in the trademarks and servicemarks section of this Tariff are owned by BellSouth Intellectual Property Corporation.
****

ACCESS SERVICE (N)

2 - General Regulations (Cont'd) (N)

2.4 Payment Arrangements and Credit Allowances (Cont'd) (N)

2.4.8 Optional Payment Plans (Cont'd) (N)

(F) BellSouth Fast Packet Savings Plan (Cont'd) (N)

(6) The credit schedules for BellSouth Fast Packet Savings Plan agreements are as follows. Within each credit schedule a unique credit applies based upon the transmission speed of the eligible service (and as stated for features). (M)(T)

(a) The following credit schedules are applicable for Fast Packet Access Services. A unique credit applies based upon the transmission speed of the eligible Fast Packet Service. A separate credit applies for Fast Packet Access Services' features; the Features credit is also applicable for BellSouth Network Visibility Service. (M)(T)

Credit Percentages (M)

Credit Schedule	56/64 Kbps	112-1152 Kbps	1.536 Mbps	Multilink, Subrate T3 & IMA	44.210 Mbps	149.760 Mbps	599.040 Mbps	Features	
0A	7%	8%	6%	5%	5%	3%	5%	6%	(M)
0B	9%	10%	8%	7%	7%	5%	7%	8%	(M)
0C	23%	12%	18%	15%	15%	18%	18%	9%	(M)
1A	13%	14%	11%	10%	10%	6%	10%	11%	(M)
1B	18%	16%	16%	14%	14%	9%	14%	16%	(M)
1C	45%	18%	35%	29%	29%	35%	35%	17%	(M)
1D	50%	21%	39%	35%	35%	40%	40%	31%	(M)
2A	34%	20%	29%	26%	26%	16%	26%	29%	(M)
2B	48%	22%	41%	37%	37%	22%	37%	41%	(M)
2C	54%	33%	50%	45%	45%	45%	45%	45%	(M)
3A	40%	22%	35%	30%	30%	19%	31%	30%	(M)
3B	54%	33%	50%	45%	45%	45%	45%	45%	(M)
3C	56%	38%	54%	50%	50%	50%	50%	50%	(M)

Certain material now appearing on this page previously appeared on Seventh Revised Page 2-49.0.18.7.

All BellSouth marks contained herein and as set forth in the trademarks and servicemarks section of this Tariff are owned by BellSouth Intellectual Property Corporation.
****

2.4 Payment Arrangements and Credit Allowances (Cont'd)

2.4.8 Optional Payment Plans (Cont'd)

(F) BellSouth Fast Packet Savings Plan (Cont'd)
(6) (Cont'd)
(b) The credit schedules for BellSouth Native Mode LAN Interconnection Services are as follows: (T)

Credit Schedule	Credit Percentages						(T) (N)
	NMLI 10 Mbps (Note 1)		NMLI 100 Mbps		NMLI 1 Gbps		
0A	15%	(C)	15%	(C)	15%	(C)	
0B	19%	(C)	19%	(C)	19%	(C)	
0C	25%	(C)	25%	(C)	25%	(C)	
1A	18%	(C)	18%	(C)	18%	(C)	
1B	22%	(C)	22%	(C)	22%	(C)	
1C	28%	(C)	28%	(C)	28%	(C)	
1D	30%	(C)	30%	(C)	30%	(C)	
2A	20%	(C)	20%	(C)	20%	(C)	
2B	24%	(C)	24%	(C)	24%	(C)	
2C	30%	(C)	30%	(C)	30%	(C)	
3A	22%	(C)	22%	(C)	22%	(C)	
3B	26%	(C)	26%	(C)	26%	(C)	
3C	32%	(C)	32%	(C)	32%	(C)	

(c) The credit schedules for BellSouth DSL Services are as follows: (T)

Credit Schedule	Credit Percentages		
	768 Kbps x 512 Kbps	High Speed ADSL Services	Enterprise DSL Services
0A	6%	6%	6%
0B	10%	10%	10%
0C	14%	14%	14%
1A	12%	12%	12%
1B	18%	18%	18%
1C	22%	22%	22%
1D	25%	25%	25%
2A	21%	21%	21%
2B	25%	25%	25%
2C	30%	30%	30%
3A	23%	23%	23%
3B	33%	33%	33%
3C	35%	35%	35%

Note 1: These FSP discounts are also applicable to features that are not related to transmission speed. (N) (N)

All BellSouth marks contained herein and as set forth in the trademarks and servicemarks section of this Tariff are owned by BellSouth Intellectual Property Corporation.
****

2.4 Payment Arrangements and Credit Allowances (Cont'd)

2.4.8 Optional Payment Plans (Cont'd)

(F) BellSouth Fast Packet Savings Plan (Cont'd)

(7) Each month under a BellSouth FSP agreement the customer's eligible billing will be adjusted via a credit. The monthly credit will be equal to the previous month's eligible revenue times the appropriate credit percentage set forth in the credit schedule specified by the customer's BellSouth FSP agreement.

(8) To subscribe to a BellSouth FSP, a customer must submit to the Telephone Company a signed agreement provided by the Telephone Company specifying the customer's monthly revenue commitment and the term plan (indicating the actual number of plan months) desired for their FSP agreement. The customer must also identify to the Telephone Company all Access Customer Name Abbreviations (ACNAs) and all ADSL customer miscellaneous billing account information to be included in the BellSouth FSP agreement. The BellSouth FSP effective service date will be negotiated by the Telephone Company and the customer. The negotiated effective service date shall be no later than 30 days after the Telephone Company has received the aforementioned signed agreement from the customer with the required information to develop the FSP agreement. BellSouth FSP credits specified in 2.4.8(F)(7) will begin with the first bill period following the negotiated effective service date of the BellSouth FSP agreement.

(9) Except as specified in (9)(a) following, to enroll in a BellSouth FSP agreement, the customer's monthly qualifying revenues at the time of enrollment (based upon the most current monthly billing data available) must equal or exceed the entry level minimum qualifying revenue specified in the table following. The entry level minimum qualifying revenue depends upon the term plan and monthly revenue commitment level selected for the customer's FSP agreement. The entry level minimum qualifying revenues are as follows:

	Entry Level Minimum Qualifying Revenues				
Minimum Monthly Revenue Commitment Level	Plan A Term 36 - 59 Months (50% of MMRC)	Plan B Term 60 - 83 Months (35% of MMRC)	Plan C Term 84 - 143 Months (20% of MMRC)	Plan D Term 144 Months (5% of MMRC)	
$ 750,000	$ 375,000	$ 262,500	$ 150,000	-	
$ 2,000,000	$ 1,000,000	$ 700,000	$ 400,000	$100,000	
$ 5,000,000	$ 2,500,000	$ 1,750,000	$ 1,000,000	-	
$ 10,000,000	$ 5,000,000	$ 3,500,000	$ 2,000,000	-	(N)

(a) A customer may enroll in a BellSouth FSP agreement between November 14, 2001, and February 14, 2002, with only 50% of the entry level minimum qualifying revenues set forth above.

****

2.4 Payment Arrangements and Credit Allowances (Cont'd)

2.4.8 Optional Payment Plans (Cont'd)

(F) BellSouth Fast Packet Savings Plan (Cont'd)

(10) Subject to meeting the requirements set forth in 2.4.8(F)(9), customers are allowed an interim period beginning with the establishment of their BellSouth FSP agreement to increase their qualifying monthly revenues to the level of the monthly revenue commitment specified in their FSP agreement. The length of this interim period differs based upon the term plan selected for the customer's FSP agreement as follows:

- Plan A 12 month interim period allowed
- Plan B 24 month interim period allowed
- Plan C 36 month interim period allowed
- Plan D 60 month interim period allowed (N)

(11) Once the interim period specified in 2.4.8(F)(10) preceding has been completed, a Shortfall Charge shall apply on a going forward basis for each month that the customer's qualifying revenue does not equal or exceed the customer's revenue commitment. The applicable Shortfall Charge for each such month is an amount equal to the difference between the customer's monthly revenue commitment and their actual qualifying revenues billed that month.

(12) Subject to the terms set forth in 2.4.8(F)(8) for initiating a new FSP agreement, customers may request to revise an existing FSP agreement to include a different length of term and/or monthly revenue commitment. The number of months served under the existing FSP agreement will be counted in establishing the total term length for the revised FSP agreement (i.e., providing recognition of previous FSP service). Based upon customer requested revisions in the total length of the FSP agreement and/or monthly revenue commitment, the customer's credit schedule as specified in 2.4.8(F)(6) may change.

A customer may make such revisions to his FSP agreement without a Commitment Reduction Charge (discussed following) as long as the total revenue commitment associated with the revised FSP agreement is equal to or greater than the total revenue commitment for the existing FSP agreement.

The total revenue commitment associated with the existing plan is the product of multiplying the total number of months specified in the customer's existing FSP agreement by the existing plan's monthly revenue commitment.

The total revenue commitment associated with the revised plan is determined by taking the product of multiplying the number of months served under the existing plan by the existing plan's monthly revenue commitment, and adding it to, the product of multiplying the number of additional months in the revised FSP plan by the revised plan's monthly revenue commitment.

****

2.4 Payment Arrangements and Credit Allowances (Cont'd) (N)

2.4.8 Optional Payment Plans (Cont'd) (N)

(F) BellSouth Fast Packet Savings Plan (Cont'd) (N)

(12) (Cont'd) (N)

If the total revenue commitment associated with the revised FSP plan (N)
is less than the total revenue commitment associated with the (N)
existing plan, a Commitment Reduction Charge is applicable. This (N)
Commitment Reduction Charge is equal to the product of the total FSP (N)
credits received by the customer since the initiation of a FSP plan, (N)
multiplied by, 1 minus the ratio of the revised plan total revenue (N)
commitment to the existing plan total revenue commitment. (N)

For example: After 40 months, a customer with a 60 month FSP (N)
agreement with a $5,000,000 revenue commitment per month (discount (N)
schedule 2B) wants to change to a $2,000,000 revenue commitment (N)
for the next 36 months. (The customer's new agreement will be for (N)
a total of 76 months (40 months plus 36 months). FSP crediting for (N)
the next 36 months will be under discount schedule 1B.) Thus far (N)
under the existing FSP agreement, the customer has produced over (N)
$200,000,000 in qualifying revenues, which included $100,000,000 (N)
of eligible service revenues upon which he has received a total of (N)
$40,000,000 in FSP credits. (N)

The total revenue commitment associated with the existing plan is (N)
calculated as follows: (N)

60 months times $5,000,000 = $300,000,000. (N)

The total revenue commitment associated with the revised (76 (N)
month) plan is calculated as follows: (N)

= (40 months times $5,000,000) plus (36 months times $2,000,000) (N)
= ($200,000,000) plus ($72,000,000) (N)
= $272,000,000 (N)

A Commitment Reduction Charge (CRC) applies since the revised (N)
plan's total revenue commitment is less than the existing plan's (N)
total revenue commitment. The charge is calculated as follows: (N)

CRC = $40,000,000 x (1 - ($272,000,000/$300,000,000)) (N)
= $40,000,000 x (1 - .9067) (N)
= $40,000,000 x (.0933) (N)
= $ 3,732,000 (N)

****

2.4 Payment Arrangements and Credit Allowances (Cont'd) (N)

2.4.8 Optional Payment Plans (Cont'd) (N)

(F) BellSouth Fast Packet Savings Plan (Cont'd) (N)

(12) (Cont'd) (N)

(a) Under the terms set forth herein, a customer may extend the period of time under their FSP agreement. If the increase in total number of months causes the revised FSP agreement to fall under a longer term plan (as set forth in 2.4.8(F)(4)) than the existing agreement, the customer qualifies for a longer interim period (discussed in 2.4. (F)(10)). (N)

The additional interim period time allowed is equal to the difference between the interim period months associated with the revised agreement's term plan, less the interim period months associated with the existing plan which have not passed. The total interim period months allowed such a customer shall not exceed the number of interim period months specified in 2.4.8. (F)(10) preceding based upon the revised agreement's term plan. Any additional interim period time appropriate for a customer shall begin with the start date of the revised agreement. (N)

(b) Under the terms set forth herein, a customer may decrease the period of time under their FSP agreement. If the decrease in total number of months causes the revised FSP agreement to fall under a shorter term plan (as set forth in 2.4.8(F)(4)) than the existing agreement, the customer no longer qualifies for the longer interim period (discussed in 2.4.8(F)(10)) associated with the existing plan. The following terms apply upon the effective date of the revised agreement: (N)

- If the interim period associated with the existing FSP agreement has passed, no action is taken. (N)

- If the interim period associated with the existing FSP agreement is underway and has progressed beyond the interim period associated with the revised FSP agreement (as specified in 2.4.8(F)(10)), the customer's interim period shall cease upon the effective date of the revised agreement. (N)

- If the interim period associated with the existing FSP agreement is underway and has not progressed beyond the interim period associated with the revised FSP agreement, the total interim period allowed the customer is the number of months for the revised FSP agreement's term plan (as set forth in 2.4.8(F)(10)). (N)

****

2.4 Payment Arrangements and Credit Allowances (Cont'd) (N)

2.4.8 Optional Payment Plans (Cont'd) (N)

(F) BellSouth Fast Packet Savings Plan (Cont'd) (N)

(12) (Cont'd) (N)

(c) Under the terms set forth herein, a customer may increase their monthly revenue commitment and extend the period of time under their FSP agreement. If the increase in total number of months causes the revised FSP agreement to fall under a longer term plan (as set forth in 2.4.8(F)(4)) than the existing agreement, the customer qualifies for a longer interim period (discussed in 2.4.(F)(10)). (N)

The additional interim period time allowed is equal to the difference between the interim period months associated with the revised agreement's term plan, less the interim period months associated with the existing plan which have not passed, plus 12 months. Any additional interim period time appropriate for a customer shall begin with the start date of the revised agreement. (N)

(d) Under the terms set forth herein, a customer may increase their monthly revenue commitment and continue with the period of time under their FSP agreement. A customer qualifies for an additional 12 months to be added to the existing interim period. (N)

(e) Under the terms set forth herein, a customer may increase their monthly revenue commitment and shorten the period of time under their FSP agreement. The following terms apply: (N)

- If the decrease in total number of months causes the revised FSP agreement total revenue commitment to be less than the total revenue commitment associated with the existing plan, then a Commitment Reduction Charge will apply. No time period extension to the interim period will be provided. (N)
- If the revised FSP agreement total revenue commitment is greater than the existing plan total revenue commitment, a customer will receive an additional 12 months to be added to the existing interim period. (N)

****

ACCESS SERVICE

2 - General Regulations (Cont'd)

2.4 Payment Arrangements and Credit Allowances (Cont'd)

2.4.8 Optional Payment Plans (Cont'd)

(F) BellSouth Fast Packet Savings Plan (Cont'd)

(13) If the customer terminates their BellSouth FSP agreement in total prior to the completion of the specified term, a Termination Liability Charge is applicable, except as specified in (13)(a) below. The Termination Liability Charge is equal to the product of the total FSP credits received by the customer since initiation of a FSP agreement, multiplied by, one minus a term completion factor. The term completion factor is the ratio of the number of months completed under the BellSouth FSP agreement to the total number of months in the agreement.

(a) If a customer terminates their BellSouth FSP agreement in total prior to the completion of the specified term and signs a new BellSouth FSP agreement with a total revenue commitment greater than the terminated BellSouth FSP agreement's total revenue commitment, then the Termination Liability Charge will not apply. (N)

For example, a customer requests to terminate service under their BellSouth FSP agreement after 48 months. The agreement specified a $2,000,000 minimum monthly revenue commitment for 60 months. Thus far, the customer has produced over $96,000,000 in qualifying revenues, which included $32,000,000 of eligible service revenues upon which he has received a total of $4,800,000 in credits. The Termination Liability Charge would be $960,000 and would be calculated as follows:

= $4,800,000 x [1 minus (48 months divided by 60 months)]
= $4,800,000 x (1 minus .8)
= $4,800,000 x .20
= $960,000

(14) In the event of a merger or acquisition and both companies have existing BellSouth FSPs, then the customer will have the option of continuing both plans or merging both into one FSP agreement.

If the customer chooses to merge both plans into one FSP agreement, then the plan of the company making the acquisition will remain in effect and the revenues of the acquired company will be combined with those of the company making the acquisition. A revised BellSouth FSP agreement will be established based on these combined revenues subject to the regulations set forth in 2.4.8(F)(12).

If the company resulting from the merger or acquisition chooses not to continue the FSP plan(s), early termination provisions set forth in 2.4.8(F)(13) preceding apply.

(15) In the event of a merger or acquisition if only one company has a BellSouth FSP, then the customer will have the option of continuing the existing FSP plan as is or adding the new company to that existing FSP agreement.

****

ACCESS SERVICE

2 - General Regulations (Cont'd) (N)

2.4 Payment Arrangements and Credit Allowances (Cont'd) (N)

2.4.8 Optional Payment Plans (Cont'd) (N)

(F) BellSouth Fast Packet Savings Plan (Cont'd) (N)

(15) (Cont'd) (N)

If the customer chooses to add the new company to the existing FSP agreement, then the existing plan will remain in effect and the revenues of the company will be combined with those of the existing company. A revised BellSouth FSP agreement will be established based on these combined revenues subject to the regulations set forth in 2.4.8(F)(12) preceding. (N)

If the company resulting from the merger or acquisition chooses not to continue the FSP plan, early termination provisions set forth in 2.4.8(F)(13) preceding apply. (N)

****

ACCESS SERVICE

2 - General Regulations (Cont'd)

2.4 Payment Arrangements and Credit Allowances (Cont'd)

2.4.8 Optional Payment Plans (Cont'd)

(F) BellSouth Fast Packet Savings Plan (Cont'd)

(16) During a promotional period from April 30, 2004 to July 29, 2004, customers subscribing to a new BellSouth FSP agreement and customers upgrading an existing BellSouth FSP agreement will additionally qualify to receive a FSP Network to Network Interface (NNI) Promotion monthly reward credit. This reward credit will apply when the customer has placed at least one of the Fast Packet Access Services specified in (a) following in a minimum of 13 different BellSouth LATAs. (N)

A unique FSP NNI Promotion monthly reward credit is appropriate for each BellSouth FSP Minimum Monthly Revenue Commitment level based upon whether the customer has in place at least one Fast Packet Access Service specified in (a) following in either 13 different BellSouth LATAs, 26 different BellSouth LATAs or 38 different BellSouth LATAs. These reward credits are shown in (b) following. One such reward credit appropriate per FSP customer shall be applied per month once the customer has fulfilled the promotion requirements (beginning with billing periods after May 25, 2004). The appropriate reward credit shall then be applied to the bill each month for the duration of the customer's BellSouth FSP agreement, except that reward crediting shall cease and no longer be applicable for the remainder of the FSP agreement period once the customer falls below the minimum of one Fast Packet Access Service specified in (a) following in at least 13 different BellSouth LATAs. (N)

(a) A minimum of one of the following Fast Packet Access Services at 1.536 Mbps or greater speed with a network interface configured for network to network interface capability (i.e., Frame Relay NNI or ATM UNI) must be in place in a minimum of 13 different BellSouth LATAs in order for a customer with a BellSouth FSP agreement subscribed to during this promotional period to begin to receive a FSP NNI Promotion monthly reward credit: BellSouth Exchange Access Frame Relay Service (XAFRS), BellSouth Managed Shared Frame Relay Service (MSFRS), BellSouth Exchange Access ATM Service (XAATMS), and/or BellSouth Managed Shared ATM Service (MSATMS). (N)

(b) Monthly reward credit amounts for the FSP NNI Promotion are provided in the schedule following: (N)

FSP Monthly Monthly Revenue Commitment Level	FSP NNI Promotion Monthly Reward Credit			
	NNIs in 13 LATAs	NNIs in 26 LATAs	NNIs in 38 LATAs	
$ 750,000	$ 1,070.00	$ 4,200.00	$ 9,160.00	(N)
$ 2,000,000	$ 1,270.00	$ 5,000.00	$ 11,000.00	(N)
$ 5,000,000	$ 1,460.00	$ 5,740.00	$ 12,710.00	(N)
$ 10,000,000	$ 1,700.00	$ 6,690.00	$ 14,840.00	(N)

All BellSouth marks contained herein and as set forth in the trademarks and servicemarks section of this Tariff are owned by BellSouth Intellectual Property Corporation.
****

ACCESS SERVICE

2 - General Regulations (Cont'd)

2.4 Payment Arrangements and Credit Allowances (Cont'd)

2.4.8 Optional Payment Plans (Cont'd)

(F) BellSouth Fast Packet Savings Plan (Cont'd)

(16)(Cont'd) (N)

(c)Applicable taxes and fees will be based on the standard BellSouth (N)
Fast Packet Savings Plan price of qualifying services, and no taxes (N)
or fees will be added to the FSP NNI Promotion monthly reward (N)
credit applied to customer bills. (N)

All BellSouth marks contained herein and as set forth in the trademarks and servicemarks section of this Tariff are owned by BellSouth Intellectual Property Corporation.
****

ACCESS SERVICE

2 - General Regulations (Cont'd)

2.4 Payment Arrangements and Credit Allowances (Cont'd)

2.4.8 Optional Payment Plans (Cont'd)

(G) BellSouth Premium Service Incentive Plan (PSIP)

(1) Effective June 24, 2004, the BellSouth Premium Service Incentive Plan is not available for new commitment plans. Existing PSIP customers may keep their existing arrangements pursuant to the terms and conditions as follows. (N)(x) (N)(x) (N)(x) (N)(x)

The BellSouth Premium Service Incentive Plan (PSIP) allows customers to receive rewards in the form of credits applied to their bill in exchange for a revenue commitment associated with Special Access (a.k.a. BellSouth SPA) and BellSouth SWA Transport services. Applicable taxes will be computed based on the full tariff price of all services. No taxes will be added to the BellSouth PSIP credits applied to customer bills and taxes will not be included in the calculation to determine the amount of the BellSouth PSIP credit.

Pursuant to the BellSouth PSIP, the customer shall make a binding commitment to maintain a level of recurring revenue. Non-recurring revenues and taxes will not be included in the calculation of the commitment. The commitment period associated with a BellSouth PSIP arrangement is three years. In establishing a BellSouth PSIP commitment, a customer shall choose one of two options to define the level of credits that will be received. These options are as follows:

Option 1 – The BellSouth PSIP commitment level is initially set at 95% of the customer's most recent 6 months of qualified recurring revenue annualized. With Option 1, the customer will receive BellSouth PSIP credits on 100% of the customer's BellSouth PSIP eligible revenues according to the Schedule 1, Schedule 2 and Schedule 3 – Commitment Option 1 credit percentages following.

Option 2 - The BellSouth PSIP commitment level is initially set at 90% of the customer's most recent 6 months of qualified recurring revenue annualized. With Option 2, the customer will receive BellSouth PSIP credits on 100% of the customer's BellSouth PSIP eligible revenues according to the Schedule 1, Schedule 2 and Schedule 3 – Commitment Option 2 credit percentages following.

(M)(x)

Certain material previously appearing on this page now appears on Original Page 2-49.0.18.14.1.
(x) Issued to become effective on June 24, 2004 under authority of Special Permission No. 04-050.

All BellSouth marks contained herein and as set forth in the trademarks and servicemarks section of this Tariff are owned by BellSouth Intellectual Property Corporation.

****

ACCESS SERVICE (N)(x)

(N)(x)

2 - General Regulations (Cont'd)

2.4 Payment Arrangements and Credit Allowances (Cont'd) (N)(x)

2.4.8 Optional Payment Plans (Cont'd) (N)(x)

(G) BellSouth Premium Service Incentive Plan (PSIP) (Cont'd) (N)(x)

(1) (Cont'd) (N)(x)

The BellSouth PSIP is not available for customer subscription (M)(x)
concurrent with the Area Commitment Plan (ACP), as set forth in (M)(x)
2.4.8(B) preceding and/or BellSouth Transport Savings Plan (TSP), (M)(x)
as set forth in 2.4.8(E). Likewise, customers that subscribe to a (M)(x)
BellSouth PSIP may not subscribe concurrently to the ACP and/or (M)(x)
BellSouth TSP. Customers that subscribe to the ACP and/or (M)(x)
BellSouth TSP that desire to establish a BellSouth PSIP must (M)(x)
terminate their ACP and/or BellSouth TSP concurrent with the (M)(x)
establishment of their BellSouth PSIP. The date that such (M)(x)
customer's ACP and TSP arrangements are terminated, pursuant to (M)(x)
establishing a BellSouth PSIP, shall be the last day of the month (M)(x)
in which the customer's BellSouth PSIP is signed. Such termination (M)(x)
of the customer's ACP and/or BellSouth TSP shall be without (M)(x)
termination liability, as described in 2.4.8(B) and 2.4.8(E) (M)(x)
preceding. (M)(x)

Certain material now appearing on this page previously appeared on Original Page 2-49.0.18.14.
Certain material now appearing on this page previously appeared on Original Page 2-49.0.18.15.
(x) Issued to become effective on June 24, 2004 under authority of Special Permission No. 04-050.

All BellSouth marks contained herein and as set forth in the trademarks and servicemarks section of this Tariff are owned by BellSouth Intellectual Property Corporation.

****

2.4 Payment Arrangements and Credit Allowances (Cont'd)

2.4.8 Optional Payment Plans (Cont'd)

(G) BellSouth Premium Service Incentive Plan (PSIP) (Cont'd)

(M)(x)

Each month during a BellSouth PSIP commitment period, credits will be applied to the customer's bill based on their previous month's recurring billing for eligible services that were in service the entire billing month. BellSouth PSIP eligible transport services are the services listed in BellSouth PSIP credits Schedule 1 and Schedule 2 following. Non-recurring revenues and taxes will not be included in these revenues. With the BellSouth PSIP arrangement, each of the eligible services and their revenues are associated with a credit schedule that defines the specific credit percentage that will be applied to the services recurring revenues. Each credit schedule contains revenue bands that relate to the customer's BellSouth PSIP commitment level. Each revenue band has credit percentages that correlate to the time period of the customer's BellSouth PSIP. For example, a BellSouth PSIP that has been in effect for 12 months or less falls under a Year 1 percentage.

The BellSouth PSIP credit schedules and their eligible services and revenues are as follows:

Schedule 1 – Applies to all BellSouth PSIP agreements and is applicable to the services under month-to-month recurring rates and charges as follows:

- BellSouth SWA DS1 Local Channels;
- BellSouth SWA DS3 Local Channels;
- BellSouth SWA DS1 Interoffice Channels;
- BellSouth SWA DS3 Interoffice Channels;
- BellSouth SWA DS3 Channelization;
- DS1 (a.k.a. BellSouth SPA DS1) Local Channels;
- DS1 (a.k.a. BellSouth SPA DS1) Interoffice Channels;
- DS1 (a.k.a. BellSouth SPA DS1) Basic Channelization;
- Access Digital Data Access (a.k.a. BellSouth SPA DSO Digital Data) Service Local Channels;
- Digital Data Access (a.k.a. BellSouth SPA DSO Digital Data) Service Interoffice Channels;
- Voice Grade (a.k.a. BellSouth SPA DSO VG) Service Local Channels;
- Digital Data Access (a.k.a. BellSouth SPA DSO Digital Data) Service Interoffice Channels;
- WATS Access Line (a.k.a. BellSouth SPA WATS Line) Service Local Channels;
- WATS Access Line (a.k.a. BellSouth SPA WATS Line) Service Interoffice Channels; and
- SMARTPath (a.k.a. BellSouth SPA DS1 Shared Ring) Service.

Certain material previously appearing on this page now appears on Original Page 2-49.0.18.14.1.

(x) Issued to become effective on June 24, 2004 under authority of Special Permission No. 04-050.

All BellSouth marks contained herein and as set forth in the trademarks and servicemarks section of this Tariff are owned by BellSouth Intellectual Property Corporation.

****

ACCESS SERVICE (N)

2 - General Regulations (Cont'd) (N)

2.4 Payment Arrangements and Credit Allowances (Cont'd) (N)

2.4.8 Optional Payment Plans (Cont'd) (N)

(G) BellSouth Premium Service Incentive Plan (PSIP) (Cont'd) (N)

The BellSouth PSIP credit schedules and their eligible services and revenues are as follows: (Cont'd) (N)

Schedule 2 – Applies to all BellSouth PSIP agreements and is applicable to services currently under service specific commitment plans other than the Area Commitment Plan, as follows: (N)

- Voice Grade (a.k.a. BellSouth SPA DS0 VG) Service; (N)
- Digital Data Access (a.k.a. BellSouth SPA DS0 Digital Data) Service; (N)
- DS1 High Capacity (a.k.a. BellSouth SPA DS1) Service; (N)
- Access Alternate Serving Wire Center Service; (N)
- SMARTPath Service (a.k.a. BellSouth SPA DS1 Shared Ring; (N)
- LightGate (a.k.a. BellSouth SPA Point to Point Network) Service; (N)
- BellSouth SPA Managed Shared Network Service; (N)
- SMARTPath DS3 Transport Service (a.k.a. BellSouth SPA DS3 Shared Ring); (N)
- SMARTRing (a.k.a. BellSouth SPA Dedicated Ring) Service, excluding Surveillance and Reconfiguration rates; (N)
- SMARTGate (a.k.a. BellSouth SPA Managed Shared Ring Network) Service elements; (N)
- BellSouth Native Mode LAN Interconnection Service, that is not a part of a Fast Packet Savings Plan, as set forth in Section 2 of this Tariff; (N)
- BellSouth Dedicated Ring, excluding the Surveillance rate element; (N)
- BellSouth Managed Shared Ring Service; (N)
- BellSouth SWA DS0; (N)
- BellSouth SWA DS1; (N)
- BellSouth SWA Managed Shared Network Service; (N)
- BellSouth SWA DS3 Service; and (N)
- BellSouth Wavelength Service as set forth in Section 29 of this Tariff (N)

Schedule 3 – Provides credits in addition to those shown in Schedule 1 and Schedule 2 for the services eligible for those credits for BellSouth PSIP customers that cancel a BellSouth Transport Savings Plan arrangement concurrent with the establishment of a BellSouth PSIP arrangement. This additional credit is based on the BellSouth TSP customer's current revenue band and time elapsed under said BellSouth TSP. The credits received under Schedule 3 shall be further defined based on the BellSouth PSIP commitment option chosen, i.e., Option 1 or Option 2. (N)

All BellSouth marks contained herein and as set forth in the trademarks and servicemarks section of this Tariff are owned by BellSouth Intellectual Property Corporation.
****

ACCESS SERVICE (N)

2 - General Regulations (Cont'd) (N)

2.4 Payment Arrangements and Credit Allowances (Cont'd) (N)

2.4.8 Optional Payment Plans (Cont'd) (N)

(G) BellSouth Premium Service Incentive Plan (PSIP) (Cont'd) (N)

(2) To subscribe to the BellSouth PSIP, the customer must have eligible Special Access (a.k.a. BellSouth SPA) or BellSouth SWA services, for the six-month period prior to enrolling. BellSouth PSIP eligible services are the services as shown in BellSouth PSIP Credit Schedule 1 and Schedule 2 preceding. When subscribing, the Commitment Level shall be based on the customer's last six month's qualifying recurring charges. Qualifying recurring charges are the recurring charges associated with eligible services, as shown in Schedule 1 and Schedule 2, in addition to the following: (N)

- Metallic (a.k.a. BellSouth SPA Metallic) Service; (N)
- Telegraph Grade (a.k.a. BellSouth SPA Telegraph) Service; (N)
- Program Audio (a.k.a. BellSouth SPA Program Audio) Service; (N)
- Video (a.k.a. BellSouth SPA Video) Service; (N)
- Wideband Analog (a.k.a. BellSouth SPA Wideband Analog) Service (N)
- Dry Fiber; (N)
- Derived Data Channel (a.k.a. BellSouth SPA Derived Data Channel) Service; (N)
- FlexServ (a.k.a. BellSouth SPA Customer Reconfiguration) Service; (N)
- Commercial Quality Video (a.k.a. BellSouth SPA Commercial Quality Video) Service; (N)
- Uncompressed Switched Video (a.k.a. BellSouth SPA Uncompressed Switched Video) Service; (N)
- 70 MHz Transport (a.k.a. BellSouth SPA 70 MHz Transport) Service; (N)
- Digital Video (a.k.a. BellSouth SPA DS3 Digital Video) Service (N)
- BellSouth SPA Modular Video Transport Service; (N)
- Surcharge for Special Access (a.k.a. BellSouth SPA) Service; (N)
- Message Station Equipment Recovery Charge; (N)
- WATS Access Line (a.k.a. BellSouth SPA WATS Line) Service; (N)
- BellSouth ADSL Service as set forth in Section 28 of this Tariff; (N)
- BellSouth Managed Shared Ring Service as set forth in Section 6 of this Tariff (N)
- BellSouth Directory Transport as set forth in Section 9 of this Tariff; (N)
- Federal Government Transport Plan as set forth in Section 10 of this Tariff; (N)
- Exchange Access Frame Relay Service (a.k.a. BellSouth Exchange Access Frame Relay Service) as set forth in Section 21 of this Tariff; and (N)
- BellSouth Managed Shared Frame Relay Service as set forth in Section 21 of this Tariff (N)

All BellSouth marks contained herein and as set forth in the trademarks and servicemarks section of this Tariff are owned by BellSouth Intellectual Property Corporation.
****

ACCESS SERVICE (N)

2 - General Regulations (Cont'd) (N)

2.4 Payment Arrangements and Credit Allowances (Cont'd) (N)

2.4.8 Optional Payment Plans (Cont'd) (N)

(G) BellSouth Premium Service Incentive Plan (PSIP) (Cont'd) (N)

When the customer subscribes to the BellSouth PSIP it must identify to the Telephone Company all Access Customer Name Abbreviations (ACNAs) to be included in the BellSouth PSIP. A BellSouth PSIP customer may add ACNAs to an existing BellSouth PSIP by amending the BellSouth PSIP to reflect an increased commitment level due to the addition of the ACNAs, provided that the BellSouth PSIP customer makes a binding commitment to a higher revenue commitment pursuant to the customer's applicable BellSouth PSIP Option 1 or Option 2 commitment requirements. Credits associated with the added ACNAs will be made on a going forward basis from the effective date of the amended BellSouth PSIP. (N)

The term of a BellSouth PSIP is three years. (N)

The effective date of a customer's BellSouth PSIP shall be the first calendar day of the month following the date of the last signature associated with the document memorializing the customer's binding commitment. Credit calculations will begin with the first full month's billing after the BellSouth PSIP's effective date and credits will begin on the subsequent month's bill. (N)

For an amended BellSouth PSIP, the effective date of a customer's amended BellSouth PSIP shall be the first calendar day of the month following the date of the last signature associated with memorializing in writing the amended BellSouth PSIP. The term of the amended BellSouth PSIP is equal to the time remaining on the BellSouth PSIP that was amended. For the amended BellSouth PSIP, other than the Commitment Level, the rules and regulations associated with the amended BellSouth PSIP shall be those in effect at the time the original BellSouth PSIP was established. (N)

All BellSouth marks contained herein and as set forth in the trademarks and servicemarks section of this Tariff are owned by BellSouth Intellectual Property Corporation.
****

ACCESS SERVICE (N)

2 - General Regulations (Cont'd) (N)

2.4 Payment Arrangements and Credit Allowances (Cont'd) (N)

2.4.8 Optional Payment Plans (Cont'd) (N)

(G) BellSouth Premium Service Incentive Plan (PSIP) (Cont'd) (N)

(2)(Cont'd) (N)

Customers may elect to increase their BellSouth PSIP Commitment Level at any time during the term of the BellSouth PSIP, but may never decrease said Commitment Level. For either Option 1 or Option 2, upon Commitment Level Review, should the customers actual charges fall below 90% of their qualifying charges, and the customer elects not to increase the Commitment Level, BellSouth's obligation to apply BellSouth PSIP credits shall decrease to an amount proportional to the ratio of the commitment level and the total qualifying charges. For example, customer A has annualized BellSouth PSIP qualifying charges of $110M per year and signs a BellSouth PSIP agreement with a commitment level at 95%, i.e.$104.5M. The BellSouth PSIP credits will be based on application of the BellSouth PSIP credits against 100% of the customer's eligible charges, as long as the commitment level remains at or above 90% of the BellSouth PSIP qualifying charges. If, upon Commitment Level Review, the customer's qualifying charges increases to $120M per year during the term of the agreement, the customer would have the option of 1) increasing their BellSouth PSIP Commitment Level back up to at least 95% for an Option 1 subscriber or 90% for an Option 2 subscriber, minimally $114M for this example using Option 1, and continuing to receive BellSouth PSIP credits on 100% of their BellSouth PSIP eligible charges, or 2) leaving their BellSouth PSIP commitment level at $104.5M (i.e. 87.1% of $120M) and receiving BellSouth PSIP credits on 87.1% of their BellSouth PSIP eligible charges. (N)

Should an increase in the BellSouth PSIP commitment level result in an upgrade to the next higher BellSouth PSIP revenue band the customer will be eligible for the increased BellSouth PSIP credits associated with that new band. At any time during the BellSouth PSIP, customers may request an upgrade to the next higher BellSouth PSIP revenue band, provided their previous 6 months BellSouth PSIP qualifying revenue annualized, is equal to or greater than the minimum revenue threshold of the next higher BellSouth PSIP revenue band. Said request shall be executed via an amendment to the customer's BellSouth PSIP. If the customer elects to upgrade to the next higher revenue band, the customer's BellSouth PSIP commitment level will also increase to either 95% or 90% (depending on the commitment level option originally selected) of their previous 6 months BellSouth PSIP qualifying revenue, annualized, or the minimum revenue threshold of the next higher BellSouth PSIP revenue band, whichever is greater. The customer would then receive BellSouth PSIP credits associated with the upgraded revenue band. (N)

All BellSouth marks contained herein and as set forth in the trademarks and servicemarks section of this Tariff are owned by BellSouth Intellectual Property Corporation.
****

ACCESS SERVICE (N)

2 - General Regulations (Cont'd) (N)

2.4 Payment Arrangements and Credit Allowances (Cont'd) (N)

2.4.8 Optional Payment Plans (Cont'd) (N)

(G) BellSouth Premium Service Incentive Plan (PSIP) (Cont'd) (N)

(3) Regardless of the initial BellSouth PSIP Commitment Level option (i.e., Option 1 or Option 2), a Commitment Level Review will be conducted at 6 month intervals throughout the term of the agreement. Commitment Level Reviews conducted at the 6 month, 18 month and 30 month time periods of a BellSouth PSIP agreement are considered semi-annual reviews. Commitment Level Reviews conducted at the 12 month, 24 month and 36 month time periods of a BellSouth PSIP agreement are considered annual reviews. (N)

If at a Commitment Level Review, the customer's qualified charges are less than the customer's BellSouth PSIP Commitment Level, then a shortfall charge shall apply. For a semi-annual Commitment Level Review, the customer's previous 6 months recurring billing for qualified services will be compared to 50% of the customer's BellSouth PSIP Commitment Level. For an annual Commitment Level Review, the customer's previous 12 months recurring billing for qualified services will be compared to 100% of the customer's BellSouth PSIP Commitment Level. (N)

If at a Commitment Level Review, the customer's qualified revenues are less than the customer's BellSouth PSIP Commitment Level, then a shortfall charge shall apply. The shortfall charge will be calculated as follows: (N)

- If the shortfall is greater than 0% and up to 3% of the Commitment Level, the shortfall charge will be a payback of BellSouth PSIP credits equal 5% of the BellSouth PSIP eligible charges during that review period. (N)
- If the shortfall is greater than 3% and up to 10% of the Commitment Level, the shortfall charge will be a payback of BellSouth PSIP credits equal 40% of the BellSouth PSIP credits given during that review period. (N)
- If the shortfall is greater than 10% and up to 20% of the Commitment Level, the shortfall charge will be a payback of BellSouth PSIP credits equal 70% of the BellSouth PSIP credits given during the review period. (N)
- If the shortfall is greater than 20% of the Commitment Level, the shortfall charge will be a payback of BellSouth PSIP credits equal 100% of the BellSouth PSIP credits given during the review period. (N)

If a customer has a shortfall at both a semi-annual Commitment Level Review and the subsequent annual Commitment Level Review, the shortfall charge applied to the customer bill at the annual Commitment Level Review shall be equal to the annual Commitment Level Review shortfall charge minus the semi-annual shortfall charge applied at the previous semi-annual Commitment Level Review. (N)

All BellSouth marks contained herein and as set forth in the trademarks and servicemarks section of this Tariff are owned by BellSouth Intellectual Property Corporation.
****

ACCESS SERVICE (N)

2 - General Regulations (Cont'd) (N)

2.4 Payment Arrangements and Credit Allowances (Cont'd) (N)

2.4.8 Optional Payment Plans (Cont'd) (N)

(G) BellSouth Premium Service Incentive Plan (PSIP) (Cont'd) (N)

(3) Cont'd) (N)

If a customer meets the Commitment Level at the semi-annual Commitment Level Review, but had a shortfall at the annual Commitment Level Review, the full annual shortfall charge shall be applied. (N)

If a customer does not meet the Commitment Level at a semi-annual Commitment Level Review, but meets the Commitment Level at following annual Commitment Level Review, the shortfall charge applied at the semi-annual Commitment Level Review shall be credited back to the customer. (N)

If at any Commitment Level Review, a customer has a shortfall, the shortfall charge will appear on the customer's subsequent month's bill. BellSouth PSIP shortfall charges shall not be subject to BellSouth PSIP credits. (N)

If at an annual Commitment Level Review, should the customer's previous 12 months of qualifying charges fall below 75% of the customer's original commitment level, BellSouth would have the right to terminate the customer's BellSouth PSIP and apply any and all shortfall and/or termination liability Charges. (N)

All BellSouth marks contained herein and as set forth in the trademarks and servicemarks section of this Tariff are owned by BellSouth Intellectual Property Corporation.
****

ACCESS SERVICE (N)

2 - General Regulations (Cont'd) (N)

2.4 Payment Arrangements and Credit Allowances (Cont'd) (N)

2.4.8 Optional Payment Plans (Cont'd) (N)

(G) BellSouth Premium Service Incentive Plan (PSIP) (Cont'd) (N)

(5) If a customer elects to terminate a three-year BellSouth PSIP prior to the expiration date, written notification must be provided to BellSouth indicating the customer's intention to terminate the BellSouth PSIP. This notification must include the date upon which the customer wishes to terminate the BellSouth PSIP. (N)

Upon termination of the BellSouth PSIP, the customer will be billed a termination liability charge such that the termination liability plus the shortfall charges applied during a BellSouth PSIP are not greater than 100% of the credits received by the customer during the BellSouth PSIP. The termination liability that is calculated and billed upon termination of a BellSouth PSIP shall be equal to: (N)

- 100% of all BellSouth PSIP credits received by the customer since inception of the BellSouth PSIP for terminations during the first year of the BellSouth PSIP. (N)

- 75% of all BellSouth PSIP credits received by the customer since inception of the BellSouth PSIP for terminations during the second year of the BellSouth PSIP. (N)

- 50% of all BellSouth PSIP credits received by the customer since inception of the BellSouth PSIP for terminations during the third year of the BellSouth PSIP. (N)

However, if the calculated termination liability, as described above, plus the total shortfall charges during the BellSouth PSIP agreement are greater than the total credits given since inception, then the billed termination liability charge shall be calculated as follows: (N)

Billed termination liability = calculated termination liability less ((total shortfall charges plus the calculated termination liability) less (the total credit received during the BellSouth PSIP agreement)). (N)

Customers that terminate a BellSouth PSIP will not be eligible to initiate a new BellSouth PSIP for a period of 6 months following the termination of a BellSouth PSIP. (N)

All BellSouth marks contained herein and as set forth in the trademarks and servicemarks section of this Tariff are owned by BellSouth Intellectual Property Corporation.
****

ACCESS SERVICE (N)

2 - General Regulations (Cont'd) (N)

2.4 Payment Arrangements and Credit Allowances (Cont'd) (N)

2.4.8 Optional Payment Plans (Cont'd) (N)

(G) BellSouth Premium Service Incentive Plan (PSIP) (Cont'd) (N)

(6) In the event of a merger or acquisition and both companies have existing BellSouth PSIPs, then the customer will have the option of continuing both plans or merging both plans into one. If the customer chooses to merge both plans into one, then the plan of the company making the acquisition will remain in effect and the qualifying BellSouth PSIP charges of the acquired company will be combined with those of the company making the acquisition. A new commitment level will be established based on these combined revenues, but can be no lower than the combined commitment level of both companies existing BellSouth PSIP agreements. (N)

If the company resulting from the merger or acquisition chooses not to continue the plan to its expiration date, early termination provisions set forth in 2.4.8(G)(5) preceding would apply to all affected plans. (N)

If only one company has a BellSouth PSIP, then the customer will have the option of continuing the existing plan as is or adding the new company to the existing plan. If the customer chooses to add the new company to the existing plan, then the existing plan will remain in effect and the revenues of the company will be combined with those of the existing company to determine the credit bands and commitment level. A new commitment level will be established based on these combined revenues, but can be no lower than the existing BellSouth PSIP commitment level of the company with the existing BellSouth PSIP agreement. (N)

All BellSouth marks contained herein and as set forth in the trademarks and servicemarks section of this Tariff are owned by BellSouth Intellectual Property Corporation.
****

ACCESS SERVICE (N)

2 - General Regulations (Cont'd) (N)

2.4 Payment Arrangements and Credit Allowances (Cont'd) (N)

2.4.8 Optional Payment Plans (Cont'd) (N)

(G) BellSouth Premium Service Incentive Plan (PSIP) (Cont'd) (N)

(8) The Credit Schedules and Revenue Bands are as follows: (N)

(a) BellSouth PSIP Schedule 1 (N)

Revenue Bands ($M)	Year 1	Year 2	Year 3	
0 to 4	22.25%	22.50%	23.00%	(N)
>4 to 6	22.50%	23.00%	23.50%	(N)
>6 to 9	22.75%	23.25%	23.75%	(N)
>9 to 13	23.00%	23.50%	24.00%	(N)
>13 to 18.5	23.25%	23.75%	24.25%	(N)
>18.5 to 26	23.50%	24.00%	24.50%	(N)
>26 to 36	23.75%	24.25%	24.75%	(N)
>36 to 49	24.00%	24.50%	25.00%	(N)
>49 to 65	24.25%	25.00%	26.00%	(N)
>65 to 85	25.00%	25.50%	27.00%	(N)
>85 to 110	25.25%	26.50%	28.00%	(N)
>110 to 140	25.50%	27.25%	28.50%	(N)
>140 to 175	26.00%	27.50%	28.75%	(N)
>175 to 220	26.50%	28.00%	29.00%	(N)
>220 to 275	27.00%	28.25%	29.25%	(N)
>275 to 335	27.50%	28.50%	29.50%	(N)
>335 to 400	28.00%	28.75%	29.75%	(N)
>400 to 465	30.00%	30.25%	30.50%	(N)
>465 to 525	32.00%	32.25%	32.50%	(N)
>525 to 575	32.25%	32.50%	32.75%	(N)
>575 to 625	32.50%	32.75%	33.00%	(N)
>625 to 675	32.75%	33.00%	33.25%	(N)
>675 to 725	33.00%	33.25%	33.50%	(N)
>725	33.25%	33.50%	33.75%	(N)

All BellSouth marks contained herein and as set forth in the trademarks and servicemarks section of this Tariff are owned by BellSouth Intellectual Property Corporation.
****

ACCESS SERVICE (N)

2 - General Regulations (Cont'd) (N)

2.4 Payment Arrangements and Credit Allowances (Cont'd) (N)

2.4.8 Optional Payment Plans (Cont'd) (N)

(G) BellSouth Premium Service Incentive Plan (PSIP) (Cont'd) (N)

(8) Credit Schedules and Revenue Bands (Cont'd) (N)

(b) BellSouth PSIP Schedule 2 (N)

Revenue Bands ($M)	Year 1	Year 2	Year 3	
0 to 4	0.25%	0.50%	1.00%	(N)
>4 to 6	0.50%	1.00%	1.50%	(N)
>6 to 9	0.75%	1.25%	1.75%	(N)
>9 to 13	1.00%	1.50%	2.00%	(N)
>13 to 18.5	1.25%	1.75%	2.25%	(N)
>18.5 to 26	1.50%	2.00%	2.50%	(N)
>26 to 36	1.75%	2.25%	2.75%	(N)
>36 to 49	2.00%	2.50%	3.00%	(N)
>49 to 65	2.25%	3.00%	4.00%	(N)
>65 to 85	3.00%	3.50%	5.00%	(N)
>85 to 110	3.25%	4.50%	6.00%	(N)
>110 to 140	3.50%	5.25%	6.50%	(N)
>140 to 175	4.00%	5.50%	6.75%	(N)
>175 to 220	4.50%	6.00%	7.00%	(N)
>220 to 275	5.00%	6.25%	7.25%	(N)
>275 to 335	5.50%	6.50%	7.50%	(N)
>335 to 400	6.00%	6.75%	7.75%	(N)
>400 to 465	8.00%	8.25%	8.50%	(N)
>465 to 525	10.00%	10.25%	10.50%	(N)
>525 to 575	10.25%	10.50%	10.75%	(N)
>575 to 625	10.50%	10.75%	11.00%	(N)
>625 to 675	10.75%	11.00%	11.25%	(N)
>675 to 725	11.00%	11.25%	11.50%	(N)
>725	11.25%	11.50%	11.75%	(N)

All BellSouth marks contained herein and as set forth in the trademarks and servicemarks section of this Tariff are owned by BellSouth Intellectual Property Corporation.
****

ACCESS SERVICE (N)

2 - General Regulations (Cont'd) (N)

2.4 Payment Arrangements and Credit Allowances (Cont'd) (N)

2.4.8 Optional Payment Plans (Cont'd) (N)

(G) BellSouth Premium Service Incentive Plan (PSIP) (Cont'd) (N)

(8) Credit Schedules and Revenue Bands (Cont'd) (N)

(c) BellSouth PSIP Schedule 3 (N)

BellSouth PSIP Commitment Option 1 Credit Percentages (N)

Transport Savings Plan Revenue Band	Transport Savings Plan Year Year 1	Year 2	Year 3	Year 4	Year 5	
$3M to $10	0.25%	0.75%	1.25%	1.75%	2.25%	(N)
>$10M to $100M	0.25%	1.25%	2.25%	2.75%	3.25%	(N)
>$100M to $300M	0.25%	1.75%	3.25%	4.75%	6.25%	(N)
>$300M to $500M	0.25%	1.75%	2.75%	4.25%	5.75%	(N)
>$500M to $600M	0.25%	2.25%	4.25%	5.75%	7.25%	(N)
>$600M	0.25%	2.25%	4.25%	5.75%	7.25%	(N)

BellSouth PSIP Commitment Option 2 Credit Percentages (N)

Transport Savings Plan Revenue Band	Transport Savings Plan Year Year 1	Year 2	Year 3	Year 4	Year 5	
$3M to $10	NA	0.50%	1.00%	1.50%	2.00%	(N)
>$10M to $100M	NA	1.00%	2.00%	2.50%	3.00%	(N)
>$100M to $300M	NA	1.50%	3.00%	4.50%	6.00%	(N)
>$300M to $500M	NA	1.50%	2.50%	4.00%	5.50%	(N)
>$500M to $600M	NA	2.00%	4.00%	5.50%	7.00%	(N)
>$600M	NA	2.00%	4.00%	5.50%	7.00%	(N)

As an example of the application of Schedule 3, if an Option 2 customer is in Year 3 of an existing Transport Savings Plan agreement and is in the $100M to $300M Revenue Band, the incremental BellSouth PSIP credit for Transport Savings Plan time served would be 3% throughout the PSIP Agreement and would be added to the BellSouth PSIP credits reflected in Schedule 1 and Schedule 2 preceding. (N)

All BellSouth marks contained herein and as set forth in the trademarks and servicemarks section of this Tariff are owned by BellSouth Intellectual Property Corporation.
****

ACCESS SERVICE (N)

2 - General Regulations (Cont'd) (N)

2.4 Payment Arrangements and Credit Allowances (Cont'd) (N)

2.4.8 Optional Payment Plans (Cont'd) (N)

(G) BellSouth Premium Service Incentive Plan (PSIP) (Cont'd) (N)

(9) The following BellSouth PSIP credits apply to all BellSouth PSIP customers regardless of their revenue band. These credit percentages apply to the BellSouth PSIP customer's previous months recurring charges for eligible services. These credits are calculated and applied prior to any other BellSouth PSIP credit calculations. After these credits are calculated and applied, the adjusted charges will be used in conjunction with BellSouth PSIP Schedule 1, Schedule 2 and Schedule 3 to determine the customer's remaining BellSouth PSIP credits. (N)

	Section 23 Services				(N)
Service Element	Non Zone	Zone 1	Zone 2	Zone 3	(N)
Voice Grade (a.k.a. BellSouth SPA DSO VG) IOF	10.00%	10.00%	10.00%	0.00%	(N)
Voice Grade (a.k.a. BellSouth SPA DSO VG) Interfaces	10.00%	10.00%	10.00%	0.00%	(N)
Digital Data Access Service (a.k.a. BellSouth SPA DSO digital Data) IOF	10.00%	10.00%	10.00%	0.00%	(N)
Digital Data Access Service (a.k.a. BellSouth SPA DSO digital Data) Interfaces	10.00%	10.00%	10.00%	0.00%	(N)
DS1 High Capacity Service (a.k.a. BellSouth SPA DS1) Local Channel	10.00%	10.00%	10.00%	0.00%	(N)
DS1 High Capacity Service (a.k.a. BellSouth SPA DS1) IOF	10.00%	10.00%	10.00%	0.00%	
DS1 High Capacity Service (a.k.a. BellSouth SPA DS1) Interfaces	10.00%	10.00%	10.00%	0.00%	
LightGate service (a.k.a. BellSouth SPA Point to Point Network) Local Channel System	6.00%	6.00%	6.00%	0.00%	
LightGate service (a.k.a. BellSouth SPA Point to Point Network) Mileage	6.00%	6.00%	6.00%	0.00%	
LightGate service (a.k.a. BellSouth SPA Point to Point Network) Fixed	6.00%	6.00%	6.00%	0.00%	
LightGate service (a.k.a. BellSouth SPA Point to Point Network) Interfaces	6.00%	0.00%	0.00%	0.00%	

All BellSouth marks contained herein and as set forth in the trademarks and servicemarks section of this Tariff are owned by BellSouth Intellectual Property Corporation.
****

(N)

ACCESS SERVICE (N)

2 - General Regulations (Cont'd) (N)

2.4 Payment Arrangements and Credit Allowances (Cont'd) (N)

2.4.8 Optional Payment Plans (Cont'd) (N)

(G) BellSouth Premium Service Incentive Plan (PSIP) (Cont'd) (N)

Service Element	Non Zone	Zone 1	Zone 2	Zone 3	
		Section 23 Services			
(9) (Cont'd)					(N)
SMARTRing service (a.k.a. BellSouth SPA Dedicated Ring) and BellSouth Dedicated Ring Nodes	10.00%	10.00%	10.00%	5.00%	(N) (N)
SMARTRing service (a.k.a. BellSouth SPA Dedicated Ring) and BellSouth Dedicated Ring Local Channel	10.00%	10.00%	10.00%	5.00%	(N) (N) (N)
SMARTRing service (a.k.a. BellSouth SPA Dedicated Ring) and BellSouth Dedicated Ring Mileage	10.00%	10.00%	10.00%	5.00%	(N) (N) (N)
SMARTRing service (a.k.a. BellSouth SPA Dedicated Ring) and BellSouth Dedicated Ring Interfaces	10.00%	10.00%	10.00%	5.00%	(N) (N) (N) (N) (N) (N) (N)

All BellSouth marks contained herein and as set forth in the trademarks and servicemarks section of this Tariff are owned by BellSouth Intellectual Property Corporation.
****

2.4 Payment Arrangements and Credit Allowances (Cont'd)

2.4.9 Service Installation Guarantee

(A) The Telephone Company assures that orders for services to which the Service Installation Guarantee applies will be installed and available for customer use no later than the Service Date as specified in 5.1.1 following. The Service Installation Guarantee is applicable only as specified in 2.4.9(E) following, Sections 6.7.1(D) and 7.4.1(C) of this Tariff and for the Cross Connect elements in Section 13 of this Tariff.

(B) The failure of the Telephone Company to meet this commitment will result in the credit of an amount equal to the nonrecurring charges associated with the individual service having the missed Service Date being applied to the customer's bill. The credit will include only nonrecurring charges associated with the services specified in Section 6.7.1.(D), Section 7.4.1.(C), the Connection rate element specified in 28.1.9(A), (T) and Cross Connect elements in Sections 13.3.22, 13.3.23, and 13.3.24 of this Tariff, for which nonrecurring charges are applicable. The nonrecurring charges will be credited at the rate at which they were billed. The credit will not be provided if a credit of the same nonrecurring charge for the same service is provided under any other provisions of this Tariff.

(C) For Commercial Quality Video service (a.k.a. BellSouth SPA Commercial Quality Video) which is jointly provided by this Telephone Company and one or more other local exchange companies, the Service Installation Guarantee is applicable only for those portions of the Commercial Quality Video service (a.k.a. BellSouth SPA Commercial Quality Video) within this Telephone Company's serving territory and only if the failure to meet the commitment is the fault of this Telephone Company.

(D) For BellSouth Dedicated Ring and SMARTRing service (a.k.a. BellSouth SPA Dedicated Ring), the Service Installation Guarantee is applicable for all channel interface rate elements. BellSouth Dedicated Ring and SMARTRing service (a.k.a. BellSouth SPA Dedicated Ring) ring level rate elements are excluded from the Service Installation Guarantee. BellSouth Dedicated Ring and SMARTRing service (a.k.a. BellSouth SPA Dedicated Ring) ring level rate elements are defined as follows: Local Channel, Interoffice Channel, Internodal Channel, Alternate Central Office Channel, Customer Node and Central Office Node.

(E) The Service Installation Guarantee is applicable to DS1 Diverse service Local and Interoffice Channel rate elements for which nonrecurring charges are appropriate.

(F) For BellSouth Enterprise DSL service, the Service Installation Guarantee is applicable only for the Connection rate element, and only if the failure to meet the commitment is the fault of this Telephone Company.

All BellSouth marks contained herein and as set forth in the trademarks and servicemarks section of this Tariff are owned by BellSouth Intellectual Property Corporation.

****

2.4 Payment Arrangements and Credit Allowances (Cont'd)

2.4.9 Service Installation Guarantee (Cont'd)

(G) The Service Installation Guarantee applies for the following Fast Packet Access Services at DS0 and DS1 levels only: BellSouth Exchange Access Frame Relay Service, BellSouth Exchange Access Asynchronous Transfer Mode Service, Managed Shared Frame Relay Service, Managed Shared Asynchronous Transfer Mode Service. (M)

(H) Service Installation Guarantees do not apply:

(1) on Switched (a.k.a. BellSouth SWA) and Special Access (a.k.a. BellSouth SPA) services installations, moves and rearrangement of service with an agreed upon service date interval of four business days or less following the Application Date of the service order and on Digital Subscriber Line services installations, moves and rearrangement of service with an agreed upon service date interval of three business days or less following the Application Date of the service order. The Application Date for Switched (a.k.a. BellSouth SWA) and Special Access (a.k.a. BellSouth SPA) is as specified in 5.1.1(G) following. The Application Date for Digital Subscriber Line services is as specified in 28.1.4(A)(1) following.

(2) on Special Access (a.k.a. BellSouth SPA) and Fast Packet Access service orders for installations, moves and rearrangement of services with service dates that have been advanced from the standard or negotiated service interval as specified in 5.1.1(H) following, or for Digital Subscriber Line Service specified in 28.1 following, or

(3) when failure to meet the Service Date occurs because of:

(a) any act or omission, which shall include an accurate and complete service order, from this customer, any other customer or any third party, or of any other entity providing a portion of a service,

(b) labor difficulties, governmental orders, civil commotions, criminal actions against the Telephone Company, acts of God, war, or other circumstances beyond the Telephone Company's control,

(c) unavailability of the customer's facilities and/or equipment,

(4) to service requiring Special Construction as set forth in BellSouth Telecommunications, Inc.'s Tariff F.C.C. No. 2,

(M)

Certain material now appearing on this page previously appeared on 5th Revised Page 2-49.0.19

Certain material previously appearing on this page now appears on 9th Revised Page 2-49.2.

All BellSouth marks contained herein and as set forth in the trademarks and servicemarks section of this Tariff are owned by BellSouth Intellectual Property Corporation.

****

ACCESS SERVICE

2 - General Regulations (Cont'd)

2.4 Payment Arrangements and Credit Allowances (Cont'd) (M)

2.4.9 Service Installation Guarantee (Cont'd) (M)

(H) Service Installation Guarantees do not apply: (Cont'd) (M)

(5) to Specialized Service or Arrangements or Individual Case Basis filings, (M) (M)

(6) to BellSouth Virtual Expanded Interconnection service arrangements, as set forth in Section 20 of this Tariff, or (M) (M)

(7) for jointly provisioned services except as stipulated in 2.4.9(C) preceding. (M) (M)

In addition, Service Installation Guarantees will not apply during a declared National Emergency. Priority installation of National Security Emergency Preparedness (NSEP) telecommunications services shall take precedence. (M) (M) (M) (M)

2.5 Connections

Equipment and Systems (i.e., terminal equipment, multiline terminating systems and communications systems) may be connected with BellSouth SWA and Special Access (a.k.a. BellSouth SPA) service furnished by the Telephone Company where such connection is made in accordance with the provisions specified in Technical Reference Publication AS No. 1 and in 2.1 preceding.

2.6 Definitions

Certain terms used herein are defined as follows:

Access Code

The term "Access Code" denotes a uniform seven digit code assigned by the Telephone Company to an individual customer. The seven digit code has the form 101XXXX and 950-XXXX.

Certain material now appearing on this page previously appeared on 16th Revised Page 2-49.1

All BellSouth marks contained herein and as set forth in the trademarks and servicemarks section of this Tariff are owned by BellSouth Intellectual Property Corporation.
****

2.6 Definitions (Cont'd)

Additional Residential Local Exchange Service ("Additional Residential Line")

This term denotes any residential local exchange service ("residential line") provided by the Telephone Company or a reseller of a Telephone Company-provided residential line at a residential premises other than the Primary Residential Line, as defined below. The Additional Residential Local Exchange Service Line or Trunk FUS and EUCL charges apply to such residential lines. (C)

Alternate Central Office

The term "Alternate Central Office" denotes a wire center other than the serving wire center of the location of a customer node associated with BellSouth Dedicated Ring and SMARTRing service (a.k.a. BellSouth SPA Dedicated Ring).

Answer/Disconnect Supervision

The term "Answer/Disconnect Supervision" denotes the transmission of the switch trunk equipment supervisory signal (off-hook or on-hook) to the customer's point of termination as an indication that the called party has answered or disconnected.

ATM

The term Asynchronous Transfer Mode (ATM) denotes one of the general class of packet switching technologies that relay traffic via an address contained within the packet (referred to in ATM as cells). ATM is a switching method in which information does not occur periodically with respect to some reference such as a frame pattern.

ATM Cell

The term ATM cell denotes the fixed length packets utilized in ATM cell-based switching services. An ATM cell is 53 bytes long, consisting of a five-byte header containing the address and a fixed 48-byte information field.

ATM Cell-Based Switching

The term ATM cell-based switching denotes the transfer of fixed length ATM cells as opposed to variable length frames used in other packet switching technologies.

****

2.6 Definitions (Cont'd)

Attenuation Distortion

The term "Attenuation Distortion" denotes the difference in loss at specified frequencies relative to the loss at 1004 Hz, unless otherwise specified.

B8ZS

The Term "B8ZS" (Bipolar with 8 Zero Substitution) denotes a line code which allows transport of an all-zero octet over a High Capacity DS1 (a.k.a. BellSouth SPA DS1) channel. B8ZS enables Clear Channel Capability on a High Capacity DS1 (a.k.a. BellSouth SPA DS1) service.

Balance (100 Type) Test Line

The term "Balance (100 Type) Test Line" denotes an arrangement in an end office which provides for balance and noise testing.

Basic Service Element

The term Basic Service Element denotes an optional network capability associated with a Basic Serving Arrangement.

BellSouth ADSL Service

The term "BellSouth ADSL Service" denotes a transmission service that provides (C)
high-speed transmission paths for voice, data, and multi-media communications. (C)

BellSouth Direct Access to Directory Assistance

The term "BellSouth Direct Access to Directory Assistance" denotes the provision of direct access to BellSouth's Directory Assistance Listing Database, Directory Assistance Search Application and Database Administration Call Control to enable a customer to provide voice Directory Assistance Service to its end users.

BellSouth Direct Access to Directory Assistance Location

The term "BellSouth Direct Access to Directory Assistance Location" denotes the Telephone Company location for the Directory Assistance Listing Database, the DA Search Application, and the Database Administration Call Control. The Company will provide BellSouth Direct Access to Directory Assistance from its location as specified in the NATIONAL EXCHANGE CARRIER ASSOCIATION, INC., TARIFF F.C.C. NO. 4.

****

2.6 Definitions (Cont'd)

BellSouth Directory Assistance (Interstate)

The term "BellSouth Directory Assistance" denotes the provision of telephone numbers by a Telephone Company operator when the operator location is accessed by a customer premises by sending the appropriate signals, i.e., 411, 555-1212 or (NPA) 555-1212.

BellSouth Directory Assistance Location (Interstate)

The term "BellSouth Directory Assistance Location" denotes a Telephone Company office where Telephone Company equipment first receives the Directory Assistance call from a customer's premises and selects the first operator position to respond to the Directory Assistance call.

BellSouth Electronic White Pages Location

The term "BellSouth Electronic White Pages Location" (EWP location) denotes a Telephone Company office where BellSouth Electronic White Pages Access Service is provided. BellSouth Electronic White Pages locations are listed in the National Exchange Carrier Association, Inc., Tariff F.C.C. No. 4.

BellSouth Electronic White Pages System

The term "BellSouth Electronic White Pages System" (EWP system) denotes switching equipment, facilities, computer hardware and software components utilized for the provision of BellSouth Electronic White Pages Access Service.

BellSouth Inward Operator Services

The term "BellSouth Inward Operator Services" denotes a Telephone Company operator provision of verification and emergency interruption functions at the request of a customer's operator.

BellSouth Inward Operator Services Location

The term "BellSouth Inward Operator Services Location" denotes a Telephone Company office where Telephone Company equipment first receives a BellSouth Inward Operator Services call from a customer's premises and selects the first available operator position to respond.

BellSouth Line Information Data Base Location

The term "BellSouth Line Information Data Base Location" denotes the BellSouth (C)
Signaling Transfer Point (STP) that serves the BellSouth Line Information Data (C)
Base. (C)

****

2.6 Definitions (Cont'd)

BellSouth Line Information Data Base Access Service

BellSouth Line Information Data Base Access Service will transport queries and responses to and from the customer's Signaling Point of Interconnection (SPOI) and BellSouth's Line Information Data Base Access Service. This service will enable customers to validate billing information stored in BellSouth's Line Information Data Base.

BellSouth Local Number Portability Database Services (S)(x)

The term "BellSouth Local Number Portability Database Services" denotes the (S)(x)
query services which provide the routing information to allow wireline and (S)(x)
wireless telecommunications carriers or the Telephone Company to direct (S)(x)
calls placed to a ported number to the correct switch for completion to the (S)(x)
end user. (S)(x)

BellSouth SWA Basic Serving Arrangement

The term "BellSouth SWA Basic Serving Arrangement" denotes the connection of a customer to and through the BOCs networks, and should be considered the fundamental connection to those networks.

BellSouth SWA Common Transport

The term "BellSouth SWA Common Transport" denotes the transmission of the customer's BellSouth SWA traffic between the Access Tandem and the end office, between the BellSouth SWA FGA dial tone office and the end office (for terminating traffic) and, between the end office which serves as the host office for a remote switching system or module (RSS or RSM) and the RSS or RSM.

BellSouth SWA Dedicated Transport

The term "BellSouth SWA Transport" denotes the transmission of the customer's BellSouth SWA traffic utilizing dedicated facilities, when ordered by the customer, between the customer's serving wire center (SWC) and customer designated points, i.e. SWC to a Telephone Company Facility Hub (Hub). SWC to an Access Tandem, SWC to a customer designated end office, Hub to an Access Tandem, Hub to Hub, and Hub to an end office.

BellSouth SWA FGD and BellSouth SWA TSBSA 3 Signaling

The term "BellSouth SWA TSBSA 3 Signaling" denotes the signaling system which is used by equal access end offices, to transmit originating information and address digits to the customer's premises. Features of this system include overlap outpulsing, identification of the type of call, identification of the ten-digit telephone number of the calling party, and acknowledgment wink supervisory signals.

(x) Issued under authority of and in compliance with FCC Order DA 98-2534.

****

2.6 Definitions (Cont'd) (N)

BellSouth SWA Local Channel (T)

The term "BellSouth SWA Local Channel" denotes a switched transport facility (T)
between the customer's serving wire center and the customer's premises. (M)

BellSouth SWA WATS Serving Office (T)

The term "BellSouth SWA WATS Serving Office" denotes a telephone company (T)
designated serving wire center where switching, screening and/or recording (M)
functions are performed in connection with the closed-end of BellSouth SWA (T)
WATS or WATS-type services. (M)

BellSouth Telecommunications Relay Service Transport (T)

The term "BellSouth Telecommunications Relay Service Transport" refers to the (T)
provision of a specialized telecommunications service that allows the hearing (M)
and speech impaired to communicate over the telecommunications network as (M)
defined in Part 64 of the Commission's rules. (M)

BellSouth Telecommunications Relay Service Transport Center (T)

The term "BellSouth Telecommunications Relay Service Transport Center" refers (T)
to the entity receiving calls and relaying those calls to the interexchange (M)
carrier of choice through the utilization of manual intervention and/or (M)
specialized equipment. (M)

Billing Period (M)

Each Billing Period is considered to have 30 days. (M)

Bit (M)

The term "Bit" denotes the smallest unit of information in the binary system (M)
of notation. (M)

Business Day (M)

The term "Business Day" denotes the times of day that a company is open for (M)
business. Generally, in the business community, these are 8:00 or 9:00 A.M. (M)
to 5:00 or 6:00 P.M., respectively, with an hour for lunch, Monday through (M)
Friday, resulting in a standard forty (40) hour work week. However, Business (M)
Day hours for the Telephone Company may vary based on company policy, union (M)
contract and location. To determine such hours for this company, or for an (M)
individual location within this company, contact should be made at the address (M)
shown at the top of page #1 of this tariff. (M)

Certain material appearing on this Page previously appeared on 5th Revised Page 2-70.1, 2nd Revised Page 2-73, 5th Revised Page 2-70.1, 2nd Revised Page 2-51, and 5th Revised Page 2-52.

****

2.6 Definitions (Cont'd)

Cable Space

The term "Cable Space" denotes any passage or opening in, on, under/over or through the central office cable support structure (e.g., cable risers, cable racks, cable vault or alternate splicing chamber, etc.) required to bring fire retardant fiber optic riser cable from the interconnection space to the location where the riser cable and the feeder cable meet and are spliced and the spaces between the splice and the conduit space, as well as the space between the interconnection space and the Telephone Company point of termination and any other space required to bring other fire retardant communications cable from one interconnection space module to another interconnection space module of the same collocator.

Call

The term "Call" denotes a customer attempt for which the complete address code (e.g., 0-, 911, or 10 digits) is provided to the serving dial tone office or in the case of BellSouth SWA 8XX Toll Free Dialing Ten Digit Screening Service when the address code is provided to the office performing the translation or screening function.

Carrier Identification Code (CIC)

The term "Carrier Identification Code" (CIC) denotes a unique access identification code that is assigned to an Interexchange Carrier for use with BellSouth SWA FGB and/or BellSouth SWA FGD. (C)(x) (C)(x)

(x) Issued under the authority of F.C.C. Second Report and Order in CC Docket No. 92-237, In the Matter of Administration of the North American Number Plan Carrier Identification Codes (CICs), released April 11, 1997, as modified in the Reconsideration, Order on Application for Review, and Second Further Notice of Proposed Rulemaking, released October 22, 1997.

****

2.6 Definitions (Cont'd)

Carrier or Common Carrier

See Interexchange Carrier.

CCS

The term "CCS" denotes a hundred call seconds, which is a standard unit of traffic load that is equal to 100 seconds of usage or capacity of a group of servers (e.g., trunks).

CCS7 Signaling Connection

The CCS7 Signaling Connection provides a 56 kbps facility dedicated to a single customer which originates at the customer's signaling point of interconnection in a LATA and terminates at a Telephone Company Signaling Transfer Point (STP) selected by the Telephone Company. This facility, connecting the customer to a BellSouth STP, is ordered to a Telephone Company FSPOI within the same LATA as the customer's signaling point of interconnection.

CCS7 Signaling Termination

The CCS7 Signaling Termination provides a dedicated point of interface at a Telephone Company STP for a customer's CCS7 Signaling Connection.

CCS7 Access Arrangement Usage (N)

CCS7 Signaling Arrangement Usage refers to messages traversing the Telephone (N)
Company's CCS7 Signaling network for call set-up (ISUP) and non-call set-up (N)
(TCAP) purposes. (N)

Central Office

The term "Central Office" denotes a local Telephone Company switching system where Telephone Exchange Service customer station loops are terminated for purposes of interconnection to each other and to trunks.

Central Office Prefix

The term "Central Office Prefix" denotes the first three digits (NXX) of the seven digit telephone number assigned to an End User's Telephone Exchange Service when dialed on a local basis.

Centralized Automatic Reporting on Trunks Testing

The term "Centralized Automatic Reporting on Trunks Testing" denotes a type of testing which includes the capacity for measuring operational and transmission parameters.

****

ACCESS SERVICE

2 - General Regulations (Cont'd)

2.6 Definitions (Cont'd)

Centrex Type Services (N)

The term "Centrex Type Services" denotes central office based non-transport (N)
arrangements which permit abbreviated internal calling, and inward and (N)
outward calling from station lines associated with Centrex service, ESSX-1 (N)
service, ESSX service, Digital ESSX service, MultiServ service and MultiServ (N)
PLUS service. (N)

Channel(s)

The term "Channel(s)" denotes an electrical or photonic, in the case of fiber optic-based transmission systems, communications path between two or more points of termination.

Channel Service Unit

The term "Channel Service Unit" denotes equipment which performs one or more of the following functions: termination of a digital facility, regeneration of digital signals, detection and/or correction of signal format errors and remote loop back.

Channelization Equipment

Equipment which derives individual channels of voice and/or data from a higher capacity to a lower capacity or bandwidth or vice versa.

****

2.6 Definitions (Cont'd)

Channelize

The term "Channelize" denotes the process of multiplexing-demultiplexing wider bandwidth or higher speed channels into narrower bandwidth or lower speed channels and vice-versa.

Clear Channel Capability

The term "Clear Channel Capability" denotes the ability to transport twenty-four 64 Kbps channels over a 1.544 Mbps High Capacity service via B8ZS line code format.

C-Message Noise

The term "C-Message Noise" denotes the frequency weighted average noise within an idle voice channel. The frequency weighting, called C-message, is used to simulate the frequency characteristic of the 500-type telephone set and the hearing of the average subscriber.

C-Notched Noise

The term "C-Notched Noise" denotes the C-message frequency weighted noise on a voice channel with a holding tone, which is removed at the measuring end through a notch (very narrow band) filter.

(D)(x)

(D)(x)
(D)(x)
(D)(x)
(D)(x)

(x) Issued under the authority of F.C.C. Report and Order FCC 96-388 In The Matter of Implementation of the Pay Telephone Reclassification and Compensation Provisions of the Telecommunications Act of 1996. CC Docket No. 96-128, released September 20, 1996, as modified in the RECONSIDERATION ORDER, FCC 96-439, released November 8, 1996.

****

ACCESS SERVICE

2 - General Regulations (Cont'd)

2.6 Definitions (Cont'd)

Collocator - BellSouth Virtual Expanded Interconnection Service

The term "Collocator-BellSouth Virtual Expanded Interconnection Service" denotes any person, corporation, or other legal entity with whom the Telephone Company has negotiated for the purpose of provisioning an interconnection arrangement in accordance with the BellSouth Virtual Expanded Interconnection tariff provisions.

Collocator's Facilities - BellSouth Virtual Expanded Interconnection Service

The term "Collocator's Facilities-BellSouth Virtual Expanded Interconnection service" denotes the collocator-provided/Telephone Company leased fiber optic cables and central office terminating equipment installed and maintained by the Telephone Company for the sole use of provisioning a BellSouth Virtual Expanded Interconnection service arrangement, in accordance with the BellSouth Virtual Expanded Interconnection tariff provisions.

Common Line

The term "Common Line" denotes a line, trunk, pay telephone line or other facility provided under the general and/or local exchange service tariffs of the Telephone Company, terminated on a central office switch. A common line-residence is a line or trunk provided under the residence regulations of the general and/or local exchange service tariffs. A common line-business is a line provided under the business regulations of the general and/or local exchange service tariffs.

Commingling (N)

The term "Commingling" means the connecting, attaching, or otherwise linking (N)
of an unbundled network element (UNE), or a combination of unbundled network (N)
elements (UNEs), to one or more facilities or services that a requesting (N)
telecommunications carrier has obtained at wholesale from an incumbent LEC, or (N)
the combining of an UNE, or a combination of UNEs, with one or more such (N)
facilities or services. (N)

****

ACCESS SERVICE

2 - General Regulations (Cont'd)

2.6 Definitions (Cont'd)

Communications System

The term "Communications System" denotes channels and other facilities Which are capable of communications between terminal equipment provided by other than the Telephone Company.

Conduit Space

The term "Conduit Space" denotes any reinforced passage or opening in, on, under/over or through the ground between the feeder route conduit system (entry point) and cable vault location capable of containing communications facilities, and includes: cable entrance facilities; main conduit; ducts; inner ducts; gas traps; underground dips such as short sections of conduit under roadway, driveways, parking lots and similar conduit installations; required to bring the collocator-provided fiber optic feeder cable into the Telephone Company central office.

Customer(s)

The term "Customer(s)" denotes any individual, partnership, association, joint-stock company, trust, corporation, or governmental entity or other entity which subscribes to the services offered under this tariff, including both Interexchange Carriers (ICs) and End Users.

Certain material previously appearing on this page now appears on 6th Revised Page 2-52.

****

ACCESS SERVICE

2 - General Regulations (Cont'd)

2.6 Definitions (Cont'd)

Customer Location
The term "Customer Location" denotes a customer premises within the Local Access Transport Area (LATA).

Data Transmission (107 Type) Test Line
The term "Data Transmission (107 Type) Test Line" denotes an arrangement which provides for a connection to a signal source which provides test signals for one-way testing of data and voice transmission parameters.

Decibel
The term "Decibel" denotes a unit used to express relative difference in power, usually between acoustic or electric signals, equal to ten (10) times the common logarithm of the ratio of two signal powers.

Decibel Reference Noise C-Message Weighting
The term "Decibel Reference Noise C-Message Weighting" denotes noise power measurements with C-Message Weighting in decibels relative to a reference 1000 Hz tone of 90 dB below 1 milliwatt.

Decibel Reference Noise C-Message Referenced to 0
The term "Decibel Reference Noise C-Message Referenced to 0" denotes noise power in "Decibel Reference Noise C-Message Weighting" referred to or measured at a zero transmission level point.

Derived Data Channel
The term "Derived Data Channel" denotes a digital data channel derived from a two-wire local exchange facility that transmits voice and data signals simultaneously.

Certain material previously appearing on this page now appears on 4th Revised Page 2-52.1.

****

ACCESS SERVICE

2 - General Regulations (Cont'd)

2.6 Definitions (Cont'd)

Detail Billing

The term "Detail Billing" denotes the listing of each message and/or Rate element for which charges to a customer are due on a bill prepared by the Telephone Company.

Directory Number (S)(x)

The term "Directory Number" denotes a unique NPA-NXX-XXXX assigned to a (S)(x)
subscriber of a Local Service Provider. (S)(x)

Dual Tone Multifrequency Address Signaling

The term "Dual Tone Multifrequency Address Signaling" denotes a type of signaling that is an optional feature of BellSouth SWA FGA and BellSouth SWA LSBSA. It may be utilized when BellSouth SWA FGA and BellSouth SWA LSBSA is being used in the terminating direction (from the point of interface with thecustomer to the local exchange end office). An office arranged for Dual Tone
Multifrequency Signaling would expect to receive address signals from the customer in the form of Dual Tone Multifrequency signals.

(x) Issued under authority of and in compliance with FCC Order DA 98-2534.

****

ACCESS SERVICE

2 - General Regulations (Cont'd)

2.6 Definitions (Cont'd)

DS0 (M)

This denotes a channel service expressed in terms of its digitally encoded (M)
data bit rate in accordance with the North American hierarchy of digital (M)
signal levels. It is generally referred to as having a 64 Kbps transmission (M)
data rate signal. The required format and interface specifications are (M)
contained in BellSouth Technical Reference TR-NWT-000341. (M)

DS1

This denotes a channel service expressed in terms of its digitally encoded data bit rate in accordance with the North American hierarchy of digital signal levels. It has a 1.544 Mbps transmission data rate, and provides for the two-way simultaneous transmission of isochronous timed, Bipolar Return-to-Zero (BPRZ) bit stream format except where intentional bipolar violations are introduced by Bipolar with 8 Zero Substitution (B8ZS) format. Unframed signal formats are not permitted or compatible with Company equipment. The required format and interface specifications are contained in BellSouth Technical Reference TR-NPL-000054.

Echo Control

The term "Echo Control" denotes the control of reflected signals in a telephone transmission path.

Echo Path Loss

The term "Echo Path Loss" denotes the measure of reflected signal at a 4-wire point of termination without regard to the send and receive Transmission Level Point.

Echo Return Loss

The term "Echo Return Loss" denotes a frequency weighted measure of return loss over the middle of the voiceband (approximately 500 to 2500 Hz), where talker echo is most annoying.

Effective 2-Wire

The term "Effective 2-Wire" denotes a condition which permits the simultaneous transmission in both directions over a channel, but it is not possible to ensure independent information transmission in both directions. Effective 2-wire channels may be terminated with 2-wire or 4-wire interfaces.

Certain material appearing on this page previously appeared on 4th Revised Page 2-56.

****

2.6 Definitions (Cont'd)

Effective 4-Wire

The term "Effective 4-Wire" denotes a condition which permits the simultaneous independent transmission of information in both directions over a channel. The method of implementing effective 4-wire transmission is at the discretion of the Telephone Company (physical, time domain, frequency-domain separation or echo cancellation techniques). Effective 4-wire channels may be terminated with a 2-wire interface at the customer's premises. However, when terminated 2-wire, simultaneous independent transmission cannot be supported because the two wire interface combines the transmission paths into a single path.

Egress Circuits (N)

The term "Egress Circuits" denotes the facility used to transport the (N)
customer's dialed BellSouth Remote Access Service traffic to the customer's (N)
designated location once it has been collected and aggregated by the remote (N)
access server. (N)

Emergency Interruption Service

The term "Emergency Interruption Service" denotes a function performed by the Telephone Company's BellSouth Inward Operator Services operators which allows BellSouth Inward Operator Services operators to enter a connection for the purpose of attempting to interrupt a conversation in progress on a line within the LATA.

End Office Switch

The term "End Office Switch" denotes a local Telephone Company switching system where Telephone Exchange Service customer station loops are terminated for purposes of interconnection to trunks. Included are Remote Switching Modules and Remote Switching Systems served by a host office in a different wire center.

****

2.6 Definitions (Cont'd)

End User (M)

The term "End User" denotes any customer of an interstate or foreign (M)
telecommunications service that is not a carrier, except that a carrier other (M)
than a telephone company shall be deemed to be an "end user" when such carrier (M)
uses a telecommunications service for administrative purposes and a person or (M)
entity that offers telecommunications services exclusively as a reseller shall (M)
be deemed to be an "end user" if all resale transmissions offered by such (M)
reseller originate on the premises of such reseller. (M)

Entry Point

The term "Entry Point" denotes the physical entrance into the central office and/or central office vault. Not all central offices have a central office vault. Multiple entry points are more than one physical entrance into the central office and/or central office vault. Normally, multiple entry points will be distinct and/or separate conduit systems.

Entry Switch

See First Point of Switching

Envelope Delay Distortion

The term "Envelope Delay Distortion" denotes a measure of the linearity of the phase versus frequency of a channel.

Equal Level Echo Path Loss

The term "Equal Level Echo Path Loss" (ELEPL) denotes the measure of Echo Path Loss (EPL) at a 4-wire interface which is corrected by the difference between the send and receive Transmission Level Point (TLP). [ELEPL = EPL - TLP (send) + TLP (receive)]

Exchange

The term "Exchange" denotes a unit generally smaller than a Local Access and Transport Area, established by the Telephone Company for the administration of communications service in a specified area which usually embraces a city, town or village and its environs. It consists of one or more central offices together with the associated facilities used in furnishing communications service within that area. One or more designated exchanges comprise a given Local Access and Transport Area.

Certain material now appearing on this page previously appeared on Original Page 2-58.

****

2.6 Definitions (Cont'd)

Exchange Access Connectionless Data Service (a.k.a. BellSouth Exchange Access Connectionless Data Service)

The term "Exchange Access Connectionless Data Service (a.k.a. BellSouth Exchange Access Connectionless Data Service)" denotes connectionless, packet-switched data services for the interconnection of local area networks (LANs) or other compatible customer equipment.

Exchange Access Frame Relay Service (a.k.a. BellSouth Exchange Access Frame Relay Service)

The term "Exchange Access Frame Relay Service "(a.k.a. BellSouth Exchange Access Frame Relay Service) denotes a connection oriented packet-switched data service for the interconnection of local area networks (LANs) or other compatible customer equipment.

Expected Measured Loss

The term "Expected Measured Loss" denotes a calculated loss which specifies the end-to-end 1004-Hz loss on a terminated test connection between two readily accessible manual or remote test points. It is the sum of the inserted connection loss and test access loss including any test pads.

Fast Packet Access Services

The term "Fast Packet Access services" denotes high speed connectivity over a wide geographic area. Fast packet services use digital transmission facilities and switching technology to provide high speed information transfers for users with large bandwidth requirements. Fast Packet technology divides data into blocks (packets) with fixed maximum lengths. These packets are transported through the Company's network. Each packet contains the necessary information to ensure accurate data transfer to its destination.

Facility Signaling Point of Interconnection (FSPOI)

The term FSPOI denotes a Telephone Company-designated ordering point within a Telephone Company LATA to which customers may order CCS7 Signaling Connections.

Federal Observed Holiday (N)

The term "Federal Observed Holiday" denotes public holidays for Federal (N)
employees as established by Federal Law (5 U.S.C. 6103). (N)

All BellSouth marks contained herein and as set forth in the trademarks and servicemarks section of this Tariff are owned by BellSouth Intellectual Property Corporation.
****

2.6 Definitions (Cont'd)

Field Identifier

The term "Field Identifier" denotes two to four characters that are used on service orders to convey specific instructions. Field Identifiers may or may not have associated data. Selected Field Identifiers are used in Telephone Company billing systems to generate nonrecurring charges.

First-Come, First-Served

The term "First-Come, First-Served" denotes a procedure followed when the first service order received will be the first service order processed.

First Point of Switching

The term "First Point of Switching" denotes the first Telephone Company location at which switching occurs on the terminating path of a call proceeding from the customer premises to the terminating end office and, at the same time, the last Telephone Company location at which switching occurs on the originating path of a call proceeding from the originating end office to the customer premises.

Floor Space - BellSouth Virtual Expanded Interconnection Service (T)

The term "Floor Space" denotes the central office floor space required to provision a BellSouth Virtual Expanded Interconnection Service arrangement, (T) including environmental support and power, for interconnection to Telephone Company-provided services and facilities.

Frequency Shift

The term "Frequency Shift" denotes the change in the frequency of a tone as it is transmitted over a channel.

Grandfathered

The term "Grandfathered" denotes Terminal Equipment, Multiline Terminating Systems and Protective Circuitry directly connected to the facilities utilized to provide services under the provisions of this tariff, and which are considered grandfathered under Part 68 of the F.C.C.'s Rules and Regulations.

Host Office

The term "Host Office" denotes an electronic switching system which provides call processing capabilities for one or more Remote Switching Modules or Remote Switching Systems.

****

ACCESS SERVICE

2 - General Regulations (Cont'd)

2.6 Definitions (Cont'd)

HUB

The term "Hub" denotes a Telephone Company designated location at which services are either joined together (as in a bridging hub) or where services are channelized (as in a Hi-Capacity hub). A hub office may be further designated as a Digital Data Access Service (DDAS) hub through which DDAS is available for provisioning. Hubs for specific services are designated in the NATIONAL EXCHANGE CARRIER ASSOCIATION, INC. TARIFFF.C.C. NO. 4.

Immediately Available Funds

The term "Immediately Available Funds" denotes a corporate or personal check drawn on a bank account and funds which are available for use by the receiving party on the same day on which they are received and include U.S. Federal Reserve bank wire transfers, U.S. Federal Reserve notes (paper cash), U.S. coins, U.S. Postal Money Orders and New York Certificates of Deposit.

Impedance Balance

The term "Impedance Balance" denotes the method of expressing Echo Return Loss and Singing Return Loss at a 4-wire interface whereby the gains and/or loss of the 4 wire portion of the transmission path, including the hybrid, are not included in the specification.

Impulse Noise

The term "Impulse Noise" denotes any momentary occurrence of the noise on a channel over a specified level threshold. It is evaluated by counting the number of occurrences which exceed the threshold.

Individual Case Basis

The term "Individual Case Basis" denotes a condition in which the regulations, if applicable, rates and charges for an offering under the provisions of this tariff are developed based on the circumstances in each case.

Ingress Circuits (N)

The term "Ingress Circuits" denotes the facility used to transport the (N)
customer's incoming dialed BellSouth Remote Access Service traffic, e.g. PRI. (N)

Inserted Connection Loss

The term "Inserted Connection Loss" denotes the 1004 Hz power difference (in dB) between the maximum power available at the originating end and the actual power reaching the terminating end through the inserted connection.

****

ACCESS SERVICE

2 - General Regulations (Cont'd)

2.6 Definitions (Cont'd)

Interconnection

Interconnection denotes the several Interconnection rate elements that apply (C) (x)
to BellSouth SWA minutes of use. Separate rate elements are applicable for (C) (x)
originating and terminating minutes of use. Additionally, separate rate (C) (x)
elements are applicable when the customer utilizes Telephone Company-provided (C) (x)
transport facilities versus those service applications where there are no (C) (x)
Telephone Company transport facilities utilized. (C) (x)

Interexchange Carrier (IC) or Interexchange Common Carrier

The terms "Interexchange Carrier" (IC) or "Interexchange Common Carrier" denotes any individual, partnership, association, joint-stock company, trust, governmental entity or corporation engaged for hire in interstate or foreign communication by wire or radio, between two or more exchanges.

Intermodulation Distortion

The term "Intermodulation Distortion" denotes a measure of the nonlinearity of a channel. It is measured using four tones, and evaluating the ratios (in dB) of the transmitted composite four-tone signal power to the second-order products of the tones (R2), and the third-order products of the tones (R3).

Interstate Communications

The term "Interstate Communications" denotes both interstate and foreign communications.

Intrastate Communications

The term "Intrastate Communications" denotes any communications within a state subject to oversight by a state regulatory commission as provided by the laws of the state involved.

(x) Issued on not less than 36 days' notice under authority of and in compliance with FCC Orders DA 97-2358 and FCC 97-158, as amended.

****

2.6 Definitions (Cont'd)

Line Controlled Pay Stations (N)(x)

Line controlled pay stations utilize Telephone Company serving central office (N)(x)
equipment for the necessary call processing features required for pay phone (N)(x)
traffic. Traffic from these stations will be completed to the customer over (N)(x)
BellSouth SWA FGD or BellSouth SWA TSBSA 3 trunks which must be equipped with (N)(x)
the Coin Sent-Paid Capability optional feature. (N)(x)

(x) Issued under the authority of F.C.C. Report and Order FCC 96-388 In The Matter of Implementation of the Pay Telephone Reclassification and Compensation Provisions of the Telecommunications Act of 1996. CC Docket No. 96-128, released September 20, 1996, as modified in the RECONSIDERATION ORDER, FCC 96-439, released November 8, 1996.

****

ACCESS SERVICE

2 - General Regulations (Cont'd)

2.6 Definitions (Cont'd)

Line-Side Connection

The term "Line-Side Connection" denotes a connection of a transmission path to the line side of a local exchange switching system.

Local Access and Transport Area

The term "Local Access and Transport Area" denotes a geographic area established for the provision and administration of communications service. It encompasses one or more designated exchanges, which are grouped to serve common social, economic and other purposes.

Local Calling Area

The term "Local Calling Area" denotes a geographical area, as defined in the Telephone Company's General Subscriber Service Tariff, in which an end user (Telephone Exchange Service Subscriber) may complete a call without incurring MTS charges.

Location Routing Number (S)(x)

The term "Location Routing Number" (LRN) denotes a 10-digit number used to (S)(x)
uniquely identify a switch that serves ported numbers. (S)(x)

Local Tandem Switch

The term "Local Tandem Switch" denotes a local Telephone Company switching unit by which local or access telephonic communications are switched to and from an End Office Switch.

Location Provider

A location provider is the person or persons having legal authority to permit the Payphone Service Provider to place pay telephones on their premises.

Loop Around Test Line

The term "Loop Around Test Line" denotes an arrangement utilizing a Telephone Company central end office to provide a means to make certain two-way transmission tests on a manual basis. This arrangement has two central office terminations, each reached by means of separate telephone numbers and does not require any specific customer premises equipment. Equipment subject to this test arrangement is at the discretion of the customer.

(x) Issued under authority of and in compiance with FCC Order DA 98-2534.

****

ACCESS SERVICE

2 - General Regulations (Cont'd)

2.6 Definitions (Cont'd)

Loss Deviation

The term "Loss Deviation" denotes the variation of the actual loss from the designed value.

Major Fraction Thereof

The term "Major Fraction Thereof" is any period of time in excess of 1/2 of the stated amount of time. As an example, in considering a period of 24 hours, a major fraction thereof would be any period of time in excess of 12 hours exactly. Therefore, if a given service is interrupted for a period of thirty six hours and fifteen minutes, the customer would be given a credit allowance for two twenty-four hour periods for a total of forty-eight hours.

Manhole (N)

The term "Manhole" denotes a sub-surface enclosure which personnel may (N)
enter and use for the purpose of installing, operating, maintaining and (N)
repairing communications facilities. (N)

Maritime Radio Common Carriers (MRCCs)

The term "Maritime Radio Common Carriers (MRCCs)" denotes carriers which are regulated under Part 81 of the Federal Communications Commission's Rules and Regulations.

Message

The term "Message" denotes a "call" as defined preceding.

Milliwatt (102 Type) Test Line

The term "Milliwatt (102 Type) Test Line" denotes an arrangement in an end office which provides a 1004 Hz tone at 0 dBm0 for one-way transmission measurements towards the customer's premises from the Telephone Company end office.

Minutes of Use (See Access Minutes)

Mobile Telephone Switching Office (MTSO)

The term "Mobile Telephone Switching Office (MTSO)" denotes a Cellular Mobile Carrier (CMC) switching system that is used to terminate mobile stations for purposes of interconnection to each other and to trunks interfacing with the public switched network.

****

2.6 Definitions (Cont'd)

Multipoint Channel

The term "Multipoint Channel" refers to any connection which terminates three or more circuits on the same bridging node.

N-1 Carrier (S)(x)

The term "N-1 Carrier", used in connection with BellSouth Local Number (S)(x)
Portability Database Services, denotes the telecommunications carrier (S)(x)
immediately preceding the terminating carrier. (S)(x)

Network Channel Interface (NCI) Code Update

The term "Network Channel Interface (NCI) Code Update" denotes the manual or mechanical activity performed to update the NCI code on each sub-DS1 level circuit riding a DS1 High Capacity (a.k.a. BellSouth SPA DS1) service that is converted (rolled over) to a DS3 High Capacity (a.k.a. BellSouth SPA DS3) service.

Network Control Signaling

The term "Network Control Signaling" denotes the transmission of signals used in the telecommunications system which perform functions such as supervision (control, status, and charge signals), address signaling (e.g., dialing), calling and called number identifications, rate of flow, service selection error control and audible tone signals (call progress signals indicating re-order or busy conditions, alerting, coin denominations, coin collect and coin return tones) to control the operation of the telecommunications system.

Nonsynchronous Test Line

The term "Nonsynchronous Test Line" denotes an arrangement in step-by-step end offices which provides operational tests which are not as complete as those provided by the synchronous test lines, but can be made more rapidly.

North American Numbering Plan

The term "North American Numbering Plan" denotes a three-digit area (Numbering Plan Area) code and a seven-digit telephone number made up of a three-digit Central Office code plus a four-digit station number.

Off-hook

The term "Off-hook" denotes the active condition of Switched Access or a Telephone Exchange Service line.

(x) Issued under authority of and in compliance with FCC Order DA 98-2534.

****

ACCESS SERVICE

2 - General Regulations (Cont'd)

2.6 Definitions (Cont'd)

On-hook

The term "On-hook" denotes the idle condition of BellSouth SWA or a Telephone Exchange Service line. (T)

Open Circuit Test Line

The term "Open Circuit Test Line" denotes an arrangement in an end office which provides an ac open circuit termination of a trunk or line by means of an inductor of several Henries.

Operator Services System

The term "Operator Services System" (OSS) denotes the switching equipment, facilities, operator positions and software components utilized for the provision of Operator Services.

Operator Services System Location

The term "Operator Services System Location" (OSS location) denotes a Telephone Company office where Telephone Company equipment routes or receives customer Operator Services calls to or from the customer location.

Operator Services System Serving Area

The term "Operator Services System Serving Area" (OSS serving area) denotes the geographic operational domain of an Operator Services System.

Originating Direction

The term "Originating Direction" denotes the use of Access Service for the origination of calls from an end user premises to a customer premises.

Overlap Outpulsing

The term "Overlap Outpulsing" denotes the feature of the Feature Group D Signaling System which permits initiation of pulsing to the customer's premises before the calling subscriber has completed dialing an originating call. (T)(x)

(x) Material reinstated in compliance with F.C.C. Order, Docket No. 89-79, released April 14, 1993, and Special Permission No. 93-315.

****

2.6 Definitions (Cont'd)

Pay Telephone Line

The term "Pay Telephone Line" denotes facilities provided by the Telephone Company which connect pay telephone stations to the Local Exchange network.

Payphone Service Provider

The term "Payphone Service Provider" denotes one who provides payphone service, which is the provision of public or semi-public pay telephone, the provision of inmate telephone service in correctional institutions and any ancillary services.

Phase Jitter

The term "Phase Jitter" denotes the unwanted phase variations of a signal.

Point of Termination

The term "Point of Termination" denotes the point of demarcation, within a customer-designated premises at which the Telephone Company's responsibility for the provision of Access Service ends.

Ported Number

The term "Ported Number" denotes a unique Directory Number retained by a subscriber who has changed Local Service Providers.

Premises

The term "Premises" denotes a building, or a portion of a building in a multi-tenant building, or buildings on continuous property (except Railroad Right-of-way, etc.) not separated by a public highway, except for an end user that offers Telecommunications Services exclusively as a reseller. This term is not to be limited to one building, but applies as well to a complex, or campus-type configuration of buildings. For application of the FUS and EUCL Charges pursuant to Sections 3 and 4 following, each dormitory room served by a central office-based local exchange service shall be considered a premises. (C)

All BellSouth marks contained herein and as set forth in the trademarks and servicemarks section of this Tariff are owned by BellSouth Intellectual Property Corporation.
****

2.6 Definitions (Cont'd)

Primary Residential Local Exchange Service ("Primary Residential Line")

This term denotes the earliest ordered Residential Local Exchange Service ("residential line") provided by the Telephone Company or a reseller of a Telephone Company-provided residential line at an end user's residential premises. In the case that multiple residential lines are ordered at the same time at a residential premises without existing residential lines, the Primary Residential Line is that residential line to which the first telephone number is assigned. In the event the Primary Residential Line is disconnected at a residential premises served by more than one residential line, the Telephone Company will deem the Primary Line designation to the residential line to which the second telephone number was assigned. In the event an end user simultaneously orders residential lines from both the Telephone Company and one or more resellers of Telephone Company-provided residential service, the line provided by the Telephone Company will be deemed the Primary Residential Line. The Primary Residential Line FUS or EUCL charge is assessed to the Primary Residential Line. (C)

Query

The term "Query" denotes a Common Channel Signaling (CCS) message which, when appropriately sent, represents a request for validation of data.

Radio Common Carriers (RCCs)

The term "Radio Common Carriers (RCCs)" denotes carriers which are regulated under Part 22 of the Federal Communications Commission's Rules and Regulations.

****

ACCESS SERVICE

2 - General Regulations (Cont'd)

2.6 Definitions (Cont'd)

Registered Equipment

The term "Registered Equipment" denotes the customer's premises equipment which complies with and has been approved within the Registration Provisions of Part 68 of the F.C.C.'s Rules and Regulations.

Remote Access Server (N)

The term "Remote Access Server" denotes equipment that aggregates the (N)
customer's BellSouth Remote Access Service dial traffic and transports it to (N)
the customer's designated location over their egress circuits. (N)

Remote Switching Modules and/or Remote Switching Systems

The term "Remote Switching Modules and/or Remote Switching Systems" denotes small, remotely controlled electronic end office switches which obtain their call processing capability from an ESS-type Host Office.

Return Loss

The term "Return Loss" denotes a measure of the similarity between the two impedances at the junction of two transmission paths. The higher the return loss, the higher the similarity.

Secondary Channel

The term "Secondary Channel" denotes the offering of a companion digital transmission capability over the same physical facility as the primary channel at a lower bit rate. Terminal equipment required to support secondary channel capability must be provided by the customer.

Service Control Point (SCP)

The term "Service Control Point" denotes a node (translation processor based system) which provides interface and support functions in the provision of network services.

Service Installation Guarantee

The term "Service Installation Guarantee" denotes a program under which the Telephone Company will provide a credit to the customer's account for certain services in those instances when the Service Date is not met due to Telephone Company reasons.

****

ACCESS SERVICE

2 - General Regulations (Cont'd)

2.6 Definitions (Cont'd)

Service Provided Upon Request

The term "Service Provided Upon Request" (SPUR) denotes a service that has not been requested by any customers in a particular state. When a request for this service is received, a new aggregate rate will be calculated and filed in this tariff. The new rate will include the additional demand and costs for the service.

Service Switching Point (SSP) (N)

The term "Service Switching Point" (SSP) denotes a node in a CCS7 (N)
Signaling System that forumlates and receives signaling messages. (N)

****

2.6 Definitions (Cont'd)

Serving Wire Center

The term "Serving Wire Center" denotes the wire center from which the customer designated premises would normally obtain dial tone from the Telephone Company.

Seven Digit Manual Test Line

The term "Seven Digit Manual Test Line" denotes an arrangement which allows the customer to select balance, milliwatt and synchronous test lines by manually dialing a seven digit number over the associated access connection.

Shared Network Arrangement

The term "Shared Network Arrangement" denotes a service offering whereby multiple customers may cross connect on a channelized High Capacity (a.k.a. BellSouth SPA High Capacity) service and the Telephone Company will undertake to maintain separate records for each customer's portion of the shared network.

Short Circuit Test Line

The term "Short Circuit Test Line" denotes an arrangement in an end office which provides for an ac short circuit termination of a trunk or line by means of a capacitor of at least four microfarads.

Signal-to-C-Notched Noise Ratio

The term "Signal-to-C-Notched Noise Ratio" denotes the ratio in dB of a test signal to the corresponding C-Notched Noise.

Signal Transfer Point

The term "Signal Transfer Point" denotes a signaling point which routes and/or transfers signaling messages through the common channel signaling network.

(Signaling) Point Code

The term "Signaling Point Code" denotes a binary code uniquely identifying a signaling point in a signaling network. This code is used, depending upon its position in the label, either as a destination point code, identifying the intended destination of the message, or as an originating point code, identifying the originating point of the message.

Signaling Point of Interconnection (SPOI)

The term Signaling Point of Interconnection (SPOI) denotes the location where a Telephone Company-provided CCS7 Signaling Connection terminates at a (C)
customer location. (C)

****

2.6 Definitions (Cont'd)

Singing Return Loss

The term "Singing Return Loss" denotes the frequency weighted measure of return loss at the edges of the voiceband (200 to 500 Hz and 2500 to 3200 Hz), where singing (instability) problems are most likely to occur.

Space Construction Charge

The term "Space Construction Charge" denotes all work in accordance with BellSouth Telecommunications Practices and performed by BellSouth Telecommunications or Telephone Company-approved contractors, including but not limited to, space design and preparation, design and preparation of interconnection floor space enclosure, design and placement of required environmental, electrical, and fire safety support features, design and placement of required support structures of any other activity required to accommodate the installation of collocator's facilities in the Telephone Company's interconnection space(s) covered under this tariff.

Space Preparation Charge

The term "Space Preparation Charge" denotes all work involving order processing for interconnection space including interexchange carrier service center activities, network coordination activities, and outside plant provisioning activities between the central office manhole and the interconnection space.

Special Order

The term "Special Order" denotes an order for a BellSouth Directory (T)
Assistance Access service, BellSouth Operator Services Access service, (T)
BellSouth Inward Operator services or a BellSouth Line Information Data Base (T)
Access service when the service is provided: Via direct trunks to the
BellSouth Directory Assistance location or to an OSS location; or, for (T)
BellSouth Directory Assistance Access service, via specially designated (T)
trunk groups to the access tandem; or, for BellSouth Inward Operator (T)
Service, to an BellSouth Inward Operator Service location; or, for BellSouth (T)
Line Information Data Base Access Service, via specially designated (T)
facilities to a designated BellSouth Line Information Data Base Location. (T)

Subtending End Office of an Access Tandem

The term "Subtending End Office of an Access Tandem" denotes an end office that has final trunk group routing through that tandem.

****

ACCESS SERVICE

2 - General Regulations (Cont'd)

2.6 Definitions (Cont'd)

(D)
(D)
(D)
(D)

Synchronous Test Line

The term "Synchronous Test Line" denotes an arrangement in an end office which performs marginal operational tests of supervisory and ring-tripping functions.

Telephone Company Answering Service Concentrator

The term "Telephone Company Answering Service Transport Concentrator" denotes a device located in a central office of the Telephone Company which concentrates incoming calls to some number of Telephone Answering Service's client lines to some smaller number of trunks/channels connected to the customer's premises equipment.

Terminating Direction

The term "Terminating Direction" denotes the use of Access Service for the completion of calls from a customer premises to an end user premises.

Certain material previously appearing on this Page now appears on Original Page 2-52.2.

****

ACCESS SERVICE

2 - General Regulations (Cont'd)

2.6 Definitions (Cont'd)

Toll Free Dialing Database (N)

The term "Toll Free Dialing (TFD) Database" refers to the use of database (N)
technology to determine to which access customer an originating TFD call is to (N)
be delivered. An originating TFD call is a call made with the prefix 1+800, (N)
1+888, 1+877, 1+866, 1+855, 1+844, 1+833 OR 1+822. These calls may also be (N)
referred to as 8XX calls. The TFD Database routes calls to an access customer (N)
based on the dialed ten digit TFD number. Initially, the Toll Free Dialing (N)
Database will provide routing information for calls utilizing 800 and 888 toll (N)
free dialing numbers. The Toll Free Dialing Database will be expanded, as (N)
required, at a later date to include routing for 877, 855, 844, 833 and 822 (N)
toll free dialing numbers. Until that time, toll free dialing calls, other (N)
than those originated as 1+800 or 1+888, will not be completed. (N)

Traditional Signaling

The term "Traditional Signaling" denotes the Intermachine Signaling System which has been traditionally used in North America for the purpose of transmitting the called number's address digits from the originating end office to the switching machine which will terminate the call. In this system, all of the dialed digits are received by the originating switching machine, a path is selected, and the sequence of supervisory signals and outpulsed digits is initiated. No overlap outpulsing, ten digit ANI or ANI information digits are included in this signaling sequence. Acknowledgment wink is required from the terminating switch machine except when the originating switch machine is SXS.

Traffic

The term "traffic" denotes a volume of customer access minutes of use or calls.

Traffic Operator Position System (TOPS) Tandem

The term "Traffic Operator Position System" (TOPS tandem) denotes a Telephone Company office where Telephone Company equipment routes or receives customer Operator Services calls to or from the customer location. A TOPS tandem is also known as an OSS location.

Transactions Capabilities Application Part (TCAP) Messages

The term "TCAP Messages" relates to the application of TIA Interim Standard 41 (Sub-systems 005-010) for the transmission of non-call associated messages over the CCSAC network.

Certain material previously appearing on this page now appears on 2nd Revised Page 2-72.

****

2.6 Definitions (Cont'd)

Transmission Measuring (105 Type) Test Line/Responder

The term "Transmission Measuring (105 Type) Test Line/Responder" denotes an arrangement in an end office which provides far-end access to a responder and permits two-way loss and noise measurements to be made on trunks from a near end office.

Transmission Path

The term "Transmission Path" denotes an electrical path capable of transmitting signals within the range of the service offering, e.g., a voice grade transmission path is capable of transmitting voice frequencies within the approximate range of 300 to 3000 Hz. A transmission path is comprised of physical or derived channels consisting of any form or configuration of facilities typically used in the telecommunications industry.

Trunk

The term "Trunk" denotes a communications path connecting two switching systems in a network, used in the establishment of an end-to-end connection.

Trunk Group

The term "Trunk Group" denotes a set of trunks which are traffic engineered as a unit for the establishment of connections between switching systems in which all of the communications paths are interchangeable.

Trunk-Side Connection

The term "Trunk-Side Connection" denotes the connection of a transmission path to the trunk side of a local exchange switching system.

Two-Wire to Four-Wire Conversion

The term "Two-Wire to Four-Wire Conversion" denotes an arrangement which converts a four-wire transmission path to a two-wire transmission path to allow a four-wire facility to terminate in a two-wire entity (e.g., a central office switch).

Unbundled Network Elements (UNEs) (N)

The term "Unbundled Network Elements" denotes the physical facilities of the (N)
network, including the associated features, functions and capabilities, that (N)
are capable of being used in the provision of a telecommunications service, (N)
made available pursuant to Section 251 of the Telecommunications Act of 1996. (N)

****

2.6 Definitions (Cont'd)

Uniform Service Order Code (USOC)

The term "Uniform Service Order Code" denotes a three or five character alphabetic, numeric, or an alphanumeric code that identifies a specific item of service or equipment. Uniform Service Order Codes are used in the Telephone Company billing system to generate recurring rates and nonrecurring charges.

Unusable Service

A customer's service is considered unusable when it becomes inoperative to the customer because of a failure of a facility component used to furnish service under this tariff or when service fails to meet the technical performance specifications as set forth by this tariff.

Verification Service

The term "Verification Service" denotes a function performed by BellSouth Inward Operator Services' operators for the purpose of determining the line status (e.g., out of service, conversation in progress, etc.) of a line within the LATA. Proper verification of a requested number is dependent upon the station arrangements of the requested number. (T)

V and H Coordinates Method

The term "V and H Coordinates Method" denotes a method of computing airline miles between two points by utilizing an established formula which is based on the vertical and horizontal coordinates of the two points.

Wire Center

The term "Wire Center" denotes a building in which one or more central offices, used for the provision of Telephone Exchange Services, are located.

Certain material previously appearing on this Page now appears on Original Page 2-52.2.

****

3 - Carrier Common Line Access Service

The Telephone Company will provide Carrier Common Line Access Service to customers in conjunction with BellSouth SWA service provided in Section 6 of this Tariff.

3.1 General Description

Carrier Common Line Access Service provides for the use of Telephone Company common lines by customers for access to end users to furnish interstate communications.

Premium Access is (1) BellSouth SWA service provided to customers under this Tariff which furnish interstate MTS/WATS and (2) BellSouth SWA service in an end office converted to equal access.

Non-Premium Access is BellSouth SWA service provided in an end office not yet converted to equal access to customers that do not furnish interstate MTS/WATS.

A Special Access (a.k.a. BellSouth SPA) Surcharge, as set forth in 7.4.2 following, will apply to interstate Special Access (a.k.a. BellSouth SPA) service provided by the Telephone Company to a customer, in accordance with regulations as set forth in Section 7 following.

(D)
(D)

3.2 Limitations

3.2.1 Exclusions

Neither a telephone number nor detail billing are provided with Carrier Common Line Access Service. Additionally, directory listings and intercept arrangements are not included in the rates and charges for Carrier Common Line Access Service.

3.2.2 BellSouth SWA WATS Service Access Lines

All line side connections provided in the same access group will be limited to the same features and operating characteristics.

All trunk side connections provided in the same access group will be limited to the same features and operating characteristics.

All BellSouth marks contained herein and as set forth in the trademarks and servicemarks section of this Tariff are owned by BellSouth Intellectual Property Corporation.
****

ACCESS SERVICE

3 - Carrier Common Line Access Service (Cont'd)

3.2 Limitations (Cont'd)

3.2.2 BellSouth SWA WATS Service Access Lines (T)

Where BellSouth SWA services are connected with Special Access (a.k.a. BellSouth SPA) services at Telephone Company designated WATS serving offices for the provision of BellSouth SWA WATS or WATS-type services, BellSouth SWA service minutes which are carried on that end of the service (i.e., originating minutes for outward BellSouth SWA WATS and WATS-type services and terminating minutes for inward BellSouth SWA WATS and WATS-type services) shall not be assessed Carrier Common Line Access Service per minute charges with the following exception. Carrier Common Line Access Service per minute charges shall apply when BellSouth SWA FGA, BellSouth SWA FGB, BellSouth SWA LSBSA or BellSouth SWA TSBSA 1 is ordered from a non-equal access Telephone Company office that does not have measurement capabilities and the assumed average access minutes, as set forth in 6.7.8 following, are used.

3.3 Undertaking of the Telephone Company

3.3.1 Provision of Service

Where the customer is provided BellSouth SWA service under other sections of this Tariff, the Telephone Company will provide the use of Telephone Company common lines by a customer for access to end users at rates and charges as set forth in 3.9.1 following.

3.3.2 Interstate and Intrastate Use

The BellSouth SWA service provided by the Telephone Company includes the BellSouth SWA service provided for both interstate and intrastate communications. The Carrier Common Line Access Service rates and charges as set forth in 3.9.1 following apply to interstate BellSouth SWA service access minutes in accordance with the rate regulations as set forth in 3.8.4 following (Percent Interstate Use - PIU).

3.4 Obligations of the Customer

3.4.1 BellSouth SWA Service Requirement

The BellSouth SWA service associated with Carrier Common Line Access Service shall be ordered by the customer under other sections of this Tariff.

All BellSouth marks contained herein and as set forth in the trademarks and servicemarks section of this Tariff are owned by BellSouth Intellectual Property Corporation.
****

ACCESS SERVICE

3 - Carrier Common Line Access Service (Cont'd)

3.4 Obligations of the Customer (Cont'd)

3.4.2 Supervision

The customer facilities at the premises of the ordering customer shall provide the necessary on-hook and off-hook supervision.

3.5 Determination of Usage Subject to Carrier Common Line Access Service Charges

Except as set forth herein, all BellSouth SWA service provided to the customer will be subject to Carrier Common Line Access Service charges. (S)

3.5.1 Determination of Jurisdiction

When the customer reports interstate and intrastate use of BellSouth SWA service, the associated Carrier Common Line Access Service used by the customer for interstate will be determined as set forth in 3.8.4 following (Percent Interstate Use-PIU). (S)

3.5.2 Cases Involving Usage Recording by the Customer

Where BellSouth SWA FGC or BellSouth SWA TSBSA 2 end office switching is provided without Telephone Company recording and the customer records minutes of use used to determine Carrier Common Line Access Service charges (i.e., BellSouth SWA FGC or BellSouth SWA TSBSA 2 operator and calls such as line controlled pay station sent-paid, operator-DDD, operator-person, collect, credit-card, third number and/or other like calls), the customer shall furnish such minutes of use detail to the Telephone Company in a timely manner. If the customer does not furnish the data, the customer shall identify all BellSouth SWA services which could carry such calls in order for the Telephone Company to accumulate the minutes of use through the use of special Telephone Company measuring and recording equipment. (S) (C)(x) (S)

3.5.3 Local Exchange Access and Enhanced Services Exemption

When access to the local exchange is required to provide a customer service (e.g., MTS/WATS-type, telex, Data, etc.) that uses a resold private line service, BellSouth SWA service rates and regulations, as set forth in Section 6 following will apply, except when such access to the local exchange is required for the provision of an enhanced service. Carrier Common Line Access Service rates and charges as set forth in 3.9.1 following apply in accordance with the resale rate regulations as set forth in 3.6.4 following. (S)

(S) Originally filed under TN377 scheduled to become effective December 16, 1996.

(x) Issued under the authority of F.C.C. Report and Order FCC 96-388 In The Matter of Implementation of the Pay Telephone Reclassification and Compensation Provisions of the Telecommunications Act of 1996. CC Docket No. 96-128, released September 20, 1996, as modified in the RECONSIDERATION ORDER, FCC 96-439, released November 8, 1996.

****

ACCESS SERVICE

3 - Carrier Common Line Access Service (Cont'd)

3.6 Resold Services

3.6.1 Scope

Where the customer is reselling MTS and/or MTS-type service(s) on which the Carrier Common Line and BellSouth SWA service charges have been assessed, the (T)
customer may, at the option of the customer, obtain BellSouth SWA FGA, (T)
BellSouth SWA FGB, or BellSouth SWA FGD, BellSouth SWA LSBSA or BellSouth SWA (T)
TSBSA 1 and BellSouth SWA TSBSA 3 service under this Tariff as set forth in (T)
Section 6 following for originating and/or terminating access in the local exchange. Such access group arrangements, whether single lines or trunks or multiline hunt groups or trunk groups, will have Carrier Common Line Access Service charges applied as set forth in 3.9.1 following in accordance with the resale rate regulations set forth in 3.6.4 following. For purposes of administering this provision:

Resold interstate terminating MTS and MTS-type service(s) shall include collect calls, third number calls and credit card calls where the reseller pays the underlying carrier's service charges; and shall not include intrastate minutes of use.

Resold interstate originating MTS and MTS-type service(s) shall not include collect, third number, credit card or intrastate minutes of use.

3.6.2 Customer Obligations Concerning the Resale of MTS and MTS-type Services

When the customer is reselling MTS and/or MTS-type service as set forth in 3.6.1 preceding, the customer will be charged Carrier Common Line Access Service charges in accordance with the resale rate regulations as set forth in 3.6.4 following if the customer or the provider of the MTS service furnishes documentation of the MTS usage and/or the customer furnishes documentation of the MTS-type usage. Such documentation supplied by the customer shall be supplied each month and shall identify the involved resold MTS and/or MTS-type services.

The monthly period used to determine the minutes of use for resold MTS and/or MTS-type service(s) shall be the most recent monthly period for which the customer has received a bill for such resold service(s). This information shall be delivered to the Telephone Company, at a location specified by the Telephone Company, no later than 15 days after the bill date shown on the resold MTS and/or MTS-type service bill.

****

ACCESS SERVICE

3 - Carrier Common Line Access Service (Cont'd)

3.6 Resold Services (Cont'd)

3.6.2 Customer Obligations Concerning the Resale of MTS and MTS-type Services (Cont'd)

If the required information is not received by the Telephone Company, the previously reported information, as described preceding, will be used for the next two months. For any subsequent month, no allocation or credit will be made until the required documentation is delivered to the Telephone Company by the customer.

3.6.3 Resale Documentation Provided by the Customer

When the customer utilizes BellSouth SWA service as set forth in 3.6.2 preceding, the Telephone Company may request a certified copy of the customer's resold MTS or MTS-type usage billing from either the customer or the provider of the MTS or MTS-type Service. Requests for billing will relate back no more than 12 months prior to the current billing period.

3.6.4 Rate Regulations Concerning the Resale of MTS and MTS-type Services

When the customer is provided an access group to be used in conjunction with the resale of MTS and/or MTS-type services as set forth in 3.6.1 preceding, subject to the limitations as set forth in 3.2 preceding, and the Telephone Company receives the usage information required as set forth in 3.6.2 preceding, to calculate the adjustment of Carrier Common Line Access Service charges, the customer will be billed as set forth in (D), (E) or (F) following, depending upon, respectively, whether the usage is from non-equal access offices, equal access offices or a combination of the two.

(A) Apportionment and Adjustment of Resold Minutes of Use

When the customer is provided with more than one access group in a LATA in association with the resale of MTS and/or MTS-type services, the resold minutes of use will be apportioned as follows:

(M)

Certain material previously appearing on this page now appears on 2nd Revised Page 3-10.

All BellSouth marks contained herein and as set forth in the trademarks and servicemarks section of this Tariff are owned by BellSouth Intellectual Property Corporation.
****

ACCESS SERVICE

3 - Carrier Common Line Access Service (Cont'd)

3.6 Resold Services (Cont'd)

3.6.4 Rate Regulations Concerning the Resale of MTS and MTS-type Services (Cont'd)

(A) Apportionment and Adjustment of Resold Minutes of Use (Cont'd)

(1) Originating Services

The Telephone Company will apportion the resold originating MTS and/or MTS-type services and originating minutes of use for which the resale credit adjustment applies, among the access groups.Such apportionment will be based on the relationship of the originating usage for each access group to the total originating usage for all access groups in the LATA. For purposes of administering this provision:

Resold originating MTS and/or MTS-type services minutes shall be only those attributable to interstate originating MTS and/or MTS-type minutes and shall not include collect, third number, credit card or intrastate minutes of use.

The resale credit adjustment shall apply for resold originating MTS and MTS-type services and minutes of use, provided Carrier Common Line Access and BellSouth SWA service charges have been assessed on such services. (T)

(2) Terminating Services

The Telephone Company will apportion the resold terminating MTS and/or MTS-type services and terminating minutes of use for which the resale credit adjustment applies, among the access groups. Such apportionment will be based on the relationship of the terminating usage for each access group to the total terminating usage for all access groups in the LATA. For purposes of administering this provision:

Resold terminating MTS and/or MTS-type services minutes shall be only those attributable to interstate terminating MTS and/or MTS-type (i.e., collect calls, third number calls, and credit card calls) and shall not include intrastate minutes of use or MTS and/or MTS-type minutes of use paid for by another party.

****

ACCESS SERVICE

3 - Carrier Common Line Access Service (Cont'd)

3.6 Resold Services (Cont'd)

3.6.4 Rate Regulations Concerning the Resale of MTS and MTS-type Services (Cont'd)

(A) Apportionment and Adjustment of Resold Minutes of Use (Cont'd)

(2) Terminating Services (Cont'd)

The resale credit adjustment shall apply for resold terminating MTS and MTS-type services and minutes of use, provided Carrier Common Line and BellSouth SWA service charges have been assessed on such services. (S)

(B) Same State/Telephone Company/Exchange Limitation

In order for the rate regulations to apply as set forth in (D), (E) or (F) following, the access groups and the resold MTS and/or MTS-type services must be provided in the same state (except when the same extended area service arrangement is provided in two different states by the same telephone company) in the same exchange, provided by the same Telephone Company and connected directly or indirectly. For those exchanges that encompass more than one state, the customer shall report the information by state where the exchange resides. (C)

(C) Direct and Indirect Connections

Each of the access group arrangements used by the customer in association with the resold MTS and/or MTS-type services must be connected either directly or indirectly to the customer designated premises at which the resold MTS and/or MTS-type services are terminated. Direct connections are those arrangements where the access groups and resold MTS and/or MTS-type services are terminated at the same customer designated premises.

Indirect originating connections are those arrangements where the access groups and the resold originating MTS and/or MTS-type services are physically located at different customer designated premises in the same exchange. Such different customer designated premises are connected by facilities that permit a call to flow from access groups to resold MTS and/or MTS-type services.

(S) Originally filed under TN377 and deferred under TN398 until February 25, 1997.

****

ACCESS SERVICE

3 - Carrier Common Line Access Service (Cont'd)

3.6 Resold Services (Cont'd)

3.6.4 Rate Regulations Concerning the Resale of MTS and MTS-type Services (Cont'd)

(C) Direct and Indirect Connections (Cont'd)

Indirect terminating connections are those arrangements where the access groups and resold terminating MTS and/or MTS-type services are physically located at different customer designated premises in the same exchange. Such different customer designated premises are connected by facilities that permit a call to flow from resold terminating MTS and/or MTS-type services to access groups.

(D) Access Groups - Non-Equal Access Offices Only

The adjustments as set forth here and in (E) and (F) following will be computed separately for each access group.

When all the usage on an access group originates from and/or terminates at end offices that have not been converted to equal access the non-premium access charge per minute as set forth in 3.9.1 following will apply. The access minutes which will be subject to Carrier Common Line Access Service charges will be the adjusted originating interstate access minutes plus the adjusted terminating interstate access minutes for such access groups.

The adjusted originating access minutes will be the originating interstate access minutes less the reported resold originating MTS and/or MTS-type service minutes of use as set forth in (A)(1) preceding; but not less than zero. The adjusted terminating access minutes will be the terminating interstate access minutes less the reported resold terminating MTS and/or MTS-type service minutes of use as set forth in (A)(2) preceding; but not less than zero.

(E) Access Groups - Equal Access Offices Only

When all the usage on an access group originates from and/or terminates at end offices that have been converted to equal access the premium access charge per minute as set forth in 3.9.1 following will apply. The minutes billed Carrier Common Line Access Service charges will be the adjusted originating interstate access minutes and the adjusted terminating interstate access minutes for such access groups.

****

ACCESS SERVICE

3 - Carrier Common Line Access Service (Cont'd)

3.6 Resold Services (Cont'd)

3.6.4 Rate Regulations Concerning the Resale of MTS and MTS-type Services (Cont'd)

(E) Access Groups - Equal Access Offices Only (Cont'd)

The adjusted originating access minutes will be the originating interstate access minutes less the reported resold originating MTS and/or MTS-type service minutes of use as set forth in (A)(1) preceding; but not less than zero. The adjusted terminating access minutes will be the terminating interstate access minutes less the reported resold terminating MTS and/or MTS-type service minutes of use as set forth in (A)(2) preceding; but not less than zero.

(F) Access Groups - Non-Equal Access and Equal Access Offices

When an access group has usage that originates from and/or terminates at both end offices that have been converted to equal access and end offices that have not been converted, both premium and non-premium per minute charges as set forth in 3.9.1 following will apply respectively. The minutes billed Carrier Common Line Access Service charges will be the adjusted originating interstate access minutes plus the adjusted terminating interstate access minutes for such access groups.

The adjusted originating access minutes will be the originating interstate access minutes less the reported resold originating MTS and/or MTS-type service minutes of use as set forth in (A)(1) preceding; but not less than zero. The adjusted terminating access minutes will be the terminating interstate access minutes less the reported resold terminating MTS and/or MTS-type service minutes of use as set forth in (A)(2) preceding; but not less than zero.

The adjusted originating access minutes and the adjusted terminating access minutes will be apportioned between premium and non-premium access minutes using end-office specific usage data when available, or when usage data are not available, the premium and non-premium ratios developed as set forth in 6.7.1(D)3. following. The premium and non-premium per minute charges set forth in 3.9.1 following will apply to the respective premium and non-premium access minutes determined in this manner.

****

ACCESS SERVICE

3 - Carrier Common Line Access Service (Cont'd)

3.6 Resold Services (Cont'd)

3.6.4 Rate Regulations Concerning the Resale of MTS and MTS-type Services (Cont'd)

(G) When the Adjustment Will Be Applied to Customer Bills

The adjustment as set forth in (D), (E) and (F) preceding will be made to the involved customer account no later than either the next bill date, or the one subsequent to that, depending on when the usage report is obtained.

(H) Conversion of Billed Usage to Minutes

When the MTS and/or MTS-type usage is shown in hours, the number of hours shall be multiplied by 60 to develop the associated MTS and/or MTS-type minutes of use. If the MTS and/or MTS-type usage is shown in a unit that does not show hours or minutes, the customer shall provide a factor to convert the shown units to minutes.

(I) Percent Interstate Use (PIU)

The adjustment as set forth in (D), (E) and (F) preceding will be made to the involved customer account after making the adjustments to the customer account as set forth in 3.8.4 following (PIU).

3.7 Reserved for Future Use (M)

Certain material now appearing on this page previously appeared on 2nd Revised Page 3-5.

****

3.8 Rate Regulations (M)

3.8.1 Billing of Charges (M)

Carrier Common Line Access Service charges will be billed to each BellSouth (M)
SWA service provided under this Tariff in accordance with the regulations as (M)
set forth in 3.8.5 following (Determination of Premium and Non-Premium (M)
Charges) except as set forth in 3.6.4 preceding (Resale) and 3.8.4 following (M)
(PIU). (M)

3.8.2 Measuring and Recording of Call Detail (M)

When access minutes are used to determine Carrier Common Line Access Service (M)
charges, they will be accumulated using call detail recorded by Telephone (M)
Company equipment except as set forth in 3.8.3 following (Unmeasured BellSouth (M)
SWA FGA, BellSouth SWA FGB, BellSouth SWA LSBSA and BellSouth SWA TSBSA 1 (M)
usage) and BellSouth SWA FGC or BellSouth SWA TSBSA 2 operator and automated (M)
operator services systems call detail such as line controlled pay station (M)
sent-paid, operator-DDD, operator-person, collect, credit-card, third number (M)
and/or other like calls recorded by the customer. The Telephone Company (M)
measuring and recording equipment, except as set forth in 3.8.3 following (M)
(Unmeasured BellSouth SWA FGA, BellSouth SWA FGB, BellSouth SWA LSBSA and (M)
BellSouth SWA TSBSA 1 Usage), will be associated with end office or local (M)
tandem switching equipment and will record each originating and terminating (M)
access minute where answer supervision is received. The accumulated access (M)
minutes will be summed on a line by line basis, by line group or by end (M)
office, whichever type of account is used by the Telephone Company, for each (M)
customer and then rounded to the nearest minute. (M)

3.8.3 Unmeasured BellSouth SWA FGA, BellSouth SWA FGB, BellSouth SWA LSBSA and (M)
BellSouth SWA TSBSA 1 Usage (M)

When Carrier Common Line Access Service is provided in association with (M)
BellSouth SWA FGA, BellSouth SWA FGB, BellSouth SWA LSBSA and BellSouth SWA (M)
TSBSA 1 service in Telephone Company offices that are not equipped for (M)
measurement capabilities, an assumed average interstate access minutes will be (M)
used to determine Carrier Common Line Access Service charges. These assumed (M)
access minutes are as set forth in 6.7.8 of this Tariff (M)(T)

3.8.4 Percent Interstate Use (PIU) (M)

When the customer reports interstate and intrastate use of in-service (M)
BellSouth SWA service, Carrier Common Line Access Service charges will be (M)
billed only to interstate BellSouth SWA service access minutes based on the (M)
data reported by the customer as set forth in 2.3.10 preceding (Jurisdictional (M)
Reports), except where the Telephone Company is billing according to actuals (M)
by jurisdiction. Interstate BellSouth SWA service access minutes will, after (M)
adjustment as set forth in 3.6.4 preceding (Resale), when necessary, be used (M)
to determine Carrier Common Line Access Service charges as set forth in 3.8.5 (M)
following. (M)

Certain material now appearing on this page previously appeared on 6th Revised Page 3-14 and 4th Revised Page 3-15.

All BellSouth marks contained herein and as set forth in the trademarks and servicemarks section of this Tariff are owned by BellSouth Intellectual Property Corporation.
****

ACCESS SERVICE

3 - Carrier Common Line Access Service (Cont'd)

3.8 Rate Regulations (Cont'd) (M)

3.8.5 Determination of Premium and Non-Premium Charges (M)

After the adjustments as set forth in 3.6.4 and 3.8.4 preceding have been applied, when necessary, to BellSouth SWA service access minutes, charges for the involved customer account will be determined as follows: (M)

(A) Access minutes for all premium rated BellSouth SWA service subject to Carrier Common Line Access Service charges will be multiplied by the premium access per minute rate as set forth in 3.9.1 following. (M)
(B) Access minutes for all non-premium rated BellSouth SWA service subject to Carrier Common Line Access Service charges will be multiplied by the non-premium access per minute rate as set forth in 3.9.1 following. (M)
(C) Carrier Common Line Access Service charges shall not be reduced as set forth in 3.6.1 preceding unless BellSouth SWA charges, as set forth in Section 6 following, are applied to the customer's BellSouth SWA services. (M)
(D) Terminating premium access or non-premium access, per minute charge(s) apply to: (M)

- all terminating access minutes of use; (M)
- all originating access minutes of use associated with BellSouth SWA FGA and BellSouth SWA LSBSA access services where the off-hook supervisory signaling is forwarded by the customer's equipment when the called party answers; (M)
- all originating access minutes of use associated with calls placed to 700, 800 and 900 numbers, less the percentage of originating access minutes of use reported by the customer, as set forth following, that are associated with calls placed to 700, 800 and 900 numbers that terminate in a BellSouth SWA service that is assessed Carrier Common Line Access Service charges. (M)

For originating access minutes of use associated with calls placed to 700, 800 and 900 numbers which terminate on a BellSouth SWA service assessed Carrier Common Line Access Service charges, the customer shall report as follows: On or before the fifteenth day of each March, June, September and December the customer shall provide the Telephone Company a report of the percentage of total interstate 700, 800, and 900 originating minutes of use that will terminate in a BellSouth SWA service that is assessed Carrier Common Line Access Service charges for the forthcoming quarter. The reported percentage will be used by the Telephone Company to determine the customer's current monthly bill for the originating minutes of use for which the report was provided as set forth in (E) following. The customer reported percentage should reflect any under or over estimate in the prior quarter. In the event the customer does not supply a report, the Telephone Company will assume the percentage to be the same as that provided in the previous quarterly report. (M)

Certain material now appearing on this page previously appeared on 4th Revised Page 3-15 and 4th Revised Page 3-16.

All BellSouth marks contained herein and as set forth in the trademarks and servicemarks section of this Tariff are owned by BellSouth Intellectual Property Corporation.
****

3.8 Rate Regulations (Cont'd) (M)

3.8.5 Determination of Premium and Non-Premium Charges (Cont'd) (M)

(D) (Cont'd) (M)

If a dispute arises concerning the customer provided quarterly (M)
percentage report, the Telephone Company may request the customer to (M)
provide the data the customer used to determine the percentage. The (M)
customer shall keep records from which the reported percentage credit (M)
can be ascertained. Upon request of the Telephone Company, the customer (M)
shall make records available for inspection as reasonably necessary for (M)
purposes of verification of the percentages and shall supply the data (M)
within 30 days of the Telephone Company request. The Telephone Company (M)
will not request such data more than twice a year. (M)

(E) The originating premium access or non-premium access, per minute (M)
charge(s) apply to all originating access minutes of use: (M)

- less those originating access minutes of use associated with (M)
BellSouth SWA FGA and BellSouth SWA LSBSA services where off-hook (M)
supervisory signaling is forwarded by the customer's equipment (M)
when the called party answers; (M)

- less all originating access minutes of use associated with calls (M)
placed to 700, 800 and 900 numbers; (M)

- plus all originating access minutes of use associated with calls (M)
placed to 700, 800 and 900 numbers for which the customer (M)
furnishes a report of the percentage of minutes that terminate in (M)
a BellSouth SWA service that is assessed Carrier Common Line (M)
Access Service charges, and for which a corresponding reduction in (M)
the number of terminating access minutes of use has been made as (M)
set forth in (D) preceding. (M)

Material now appearing on this page previously appeared on 4th Revised Page 3-17.

All BellSouth marks contained herein and as set forth in the trademarks and servicemarks section of this Tariff are owned by BellSouth Intellectual Property Corporation.
****

ACCESS SERVICE

3 - Carrier Common Line Access Service (Cont'd)

3.9 Rates and Charges (M)

3.9.1 Carrier Common Line Access Charges (M)

Premium Access	Rate	
- Terminating Per Access Minute	$ 0.000000	(M)
- Originating Per Access Minute	0.000000	(M)
Non-Premium Access		(M)
- Terminating Per Access Minute	$ 0.000000	(M)
- Originating Per Access Minute	0.000000	(M)

Material now appearing on this page previously appeared on 49th Revised Page 3-18.

All BellSouth marks contained herein and as set forth in the trademarks and servicemarks section of this Tariff are owned by BellSouth Intellectual Property Corporation.
****

ACCESS SERVICE

3 - Carrier Common Line Access Service (Cont'd)

(M)

Material previously appearing on this page now appears on 3rd Revised Page 3-10.1.

All BellSouth marks contained herein and as set forth in the trademarks and servicemarks section of this Tariff are owned by BellSouth Intellectual Property Corporation.
****

ACCESS SERVICE

3 - Carrier Common Line Access Service (Cont'd)

(M)

Material previously appearing on this page now appears on 3rd Revised Page 3-10.1 and 3rd Revised Page 3-11.

All BellSouth marks contained herein and as set forth in the trademarks and servicemarks section of this Tariff are owned by BellSouth Intellectual Property Corporation.
****

(M)

Material previously appearing on this page now appears on 3rd Revised Page 3-11.

****

ACCESS SERVICE

3 - Carrier Common Line Access Service (Cont'd)

(M)

Material previously appearing on this page now appears on 3rd Revised Page 3-12.

All BellSouth marks contained herein and as set forth in the trademarks and servicemarks section of this Tariff are owned by BellSouth Intellectual Property Corporation.
****

3.8 Rate Regulations (Cont'd)

(D)
(D)
(D)
(D)
(D)
(D)
(D)
(D)
(D)
(D)
(D)
(D)
(D)
(D)

(D)
(D)
(D)

All BellSouth marks contained herein and as set forth in the trademarks and servicemarks section of this Tariff are owned by BellSouth Intellectual Property Corporation.
****

ACCESS SERVICE

3 - Carrier Common Line Access Service (Cont'd)

(M)

Material previously appearing on this page now appears on 3rd Revised Page 3-13.

All BellSouth marks contained herein and as set forth in the trademarks and servicemarks section of this Tariff are owned by BellSouth Intellectual Property Corporation.

****

ACCESS SERVICE

4 - End User Access Service

The Telephone Company will provide End User Access Service to end users who obtain local telephone exchange service from the Telephone Company under its General Subscriber Service Tariffs.

4.1 General Description

End User Access Service provides for the use of an End User Common Line (EUCL).

4.2 Limitations

(A) A telephone number is not provided with End User Access Service.

(B) Detail billing is not provided with End User Access Service.

(C) Directory listings are not included with End User Access Service.

(D) Intercept arrangements are not included with End User Access Service.

4.3 Undertaking of the Telephone Company

The Telephone Company will provide End User Access Service at rates and charges as set forth in 4.7 following, as follows:

(A) Use of an EUCL by an end user in connection with interstate access services provided under this Tariff. Such use will be provided when the end user obtains local exchange service.

(B) The Telephone Company will be responsible for contacts and arrangements with end user subscribers of Telephone Company-provided Local Exchange Service, or resellers thereof, for the billing of End User Access Service charges. (C)(x) (C)(x)

4.4 Obligations of the End User

(A) When the end user is a Radio Common Carrier (RCC) or a Maritime Radio Common Carrier (MRCC), it shall designate whether the local exchange services it is provided by the Telephone Company are used as access lines for its services or used as administrative lines.

(B) When the end user is provided with a local exchange service which is not identified as Centrex Type Services, Business Service or Residence or Residence Service, it shall provide the Telephone Company any requested information necessary for the Telephone Company to determine the appropriate charges.

(x) Issued on not less than 36 days' notice under authority of and in compliance with FCC Orders DA 97-2358 and FCC 97-158, as amended.

****

4.5 Payment Arrangements and Credit Allowances

(A) Minimum Period

The minimum period for which EUCL End User Access Service s provided to an end user and for which charges are applicable is the same as that in the General Subscriber Service Tariffs for the associated local telephone exchange service.

(B) Cancellation of Application

End User Access Service s cancelled when the order for the associated local telephone exchange service is cancelled. No cancellation charges apply.

(C) Changes to Orders

When changes are made to orders for the local telephone exchange service associated with End User Access Service, any necessary changes will be made for End User Access Service. No charges will apply.

(D) Allowance for Interruptions

When there is an interruption to an EUCL, requested End User Access Service and Federal Universal Service (FUS) credit allowances for interruptions will be provided as set forth for credit allowance for interruptions in 2.4.4 preceding.

(E) Temporary Suspension of Service

When an end user temporarily suspends its local exchange service, which is associated with EUCL, one-half of the EUCL and FUS per month charge will be temporarily suspended for the time period the local exchange service is suspended.

4.6 Rate Regulations

(A) End User Access Service and Federal Universal Service charges, as set forth in 4.7, following, will be billed to the end user subscriber of the associated local exchange service, including, where applicable, a reseller of the associated local exchange service, in which case the reseller shall be deemed an end user for purposes of application of such charges. (C)
(C)

(B) For each local exchange service provided as remote call forwarding residential service or remote call forwarding business service under the General Subscriber Service Tariffs, End User Access Service and Federal Universal Service charges do not apply.

All BellSouth marks contained herein and as set forth in the trademarks and servicemarks section of this Tariff are owned by BellSouth Intellectual Property Corporation.
****

4.6 Rate Regulations (Cont')

(B) (Cont'd)

For each local exchange service, other than local exchange service used for administrative purposes, provided to Radio Common Carriers (RCC) and/or Maritime Radio Common Carriers (MRCC) as access lines for their services under the General Subscriber Service Tariffs, End User Access Service charges do not apply.

(C) (1) Centrex-type services are those that (i) use a portion of a Telephone Company switch, located at a Telephone Company central office, to meet the customer's internal needs and serve as the customer's interface with the local and interexchange networks; and (ii) link the customer's station lines to the Telephone Company switch with subscriber loops.

(2) For Centrex-type service station lines, the End User Common Line (EUCL) Charge - Multiline Business Subscriber - Individual Line or Trunk rate as set forth in 4.7(C), following, applies to each line.

(3) Centrex-type services may be used to serve college, university or school offices and/or dormitory quarters. For non-dormitory station lines, the Multiline Business EUCL Charges set forth in 4.7(C), following, will apply to each line.

(4) For dormitory quarters, however, the Telephone Company shall deem each line terminating therein a Primary or Additional Residential Local Exchange Service line pursuant to the Primary and Additional Residential Line definitions specified in Section 2.6. The Primary or Additional Residential Local Exchange Service rate set forth in 4.7(A), following, will apply for each dormitory station line. (C)(x) (C)(x) (C)(x) (C)(x) (C)(x)

(5) Charges shall be based on the total number of non-dormitory and dormitory lines reported to the Telephone Company by the customer.

(D) For Basic Rate and Primary Rate ISDN service, the Excess Line Port Charge set forth in 4.7(D), following, will be assessed as a monthly charge, per Basic Rate ISDN Digital Subscriber Line or Primary Rate ISDN Interface.

(x) Issued in compliance with the Federal Communications Commission's Report and Order & Further Notice of Proposed Rulemaking, CC Docket No. 97-181, Released March 10, 1999.

****

4.6 Rate Regulations (Cont'd)

(E) When an end user is provided more than one local business exchange service in a state by the Telephone Company, or a reseller of the Telephone Company's business local exchange service, and when a local business exchange service is provided as a multiparty service under the General Subscriber Service Tariffs, each party is deemed to be a user of an EUCL and the EUCL-Multiline Business Subscriber-Individual line or trunk rate, as set forth in 4.7(C) following applies to each such party. (C)(x) (C)(x)

(F) When a payphone service provider is provided a pay telephone line the EUCL-Multiline Business subscriber-Individual line or trunk rate as set forth in 4.7(C) will apply.

(G) When an end user is provided more than one local business exchange service in a state by the Telephone Company, or a reseller of the Telephone Company's business local exchange service, other than that specified in (B) preceding and when the local business exchange service is provided under the General Subscriber Service Tariffs and is not covered by (C) and (E) preceding, the EUCL-Multiline Business Subscribers-Individual line or trunk rate as set forth in 4.7 following applies to each such local business exchange service. (C)(x) (C)(x)

(H) When an end user is provided only a single local business exchange service by the Telephone Company, or a reseller of the Telephone Company's business local exchange service, other than that specified in (B) preceding and when the local business exchange service is provided as a multiparty service under the General Subscriber Service Tariffs, each party is deemed to be a user of an EUCL and the EUCL-Single Line Business Subscriber-Individual line or trunk rate as set forth in 4.7(B) following applies to each such party. (C)(x) (C)(x)

(I) When an end user is provided only a single local business exchange service by the Telephone Company, or a reseller of the Telephone Company's business local exchange service, other than that specified in (B) preceding under the General Subscriber Service Tariffs, the EUCL-Single Line Business Subscriber-Individual line or trunk charge as set forth in 4.7(B) following applies to each single business service. (C)(x) (C)(x)

(J) When an end user is provided local exchange residence service by the Telephone Company, or a reseller of the Telephone Company's business local exchange service, other than that specified in (B) preceding, the Primary Residential EUCL Charge as set forth in 4.7(A)(1) will apply to one local exchange residence line at the premises. Each additional local exchange residence line at the same premises will be billed at the Additional Residential EUCL Charge as set forth in 4.7(A)(2); provided that Basic Rate ISDN service provided to a residential premises will be assessed the charge set forth in 4.7(A)(3) per Basic Rate ISDN Digital Subscriber Line. (C)(x) (C)(x)

Certain material previously appearing on this page has been moved to 12th Revised Page 4-5.

(x) Issued in compliance with the Federal Communications Commission's Report and Order & Further Notice of Proposed Rulemaking, CC Docket No. 97-181, Released March 10, 1999.

****

4.6 Rate Regulations (Cont'd)

The following exceptions apply to the assessment of the EUCL Charge: (1) Each line that receives Lifeline treatment as described in 4.6(M), following, will be assessed the Primary Residential EUCL Charge as set forth in 4.7(A)(1). (2) Dormitory lines served by C.O.-based services that receive residential treatment as described in 4.6(C), preceding, will be assessed the Primary Residential EUCL Charge as set forth in 4.7(A)(1).

(K) When an end user is provided a local residence exchange service by the Telephone Company, other than that specified in (B) preceding and when the local residence exchange service is provided as a multiparty service under the General Subscriber Service Tariffs, each party is deemed to be a user of an EUCL and the EUCL-Residence Subscriber-Primary Residential Local Exchange Service line or trunk rate as set forth in 4.7(A) following applies to each such party.

(L) For Telephone Company-provided Basic Rate ISDN local exchange service provided to business subscribers, the EUCL Charge will be assessed as set forth in 4.7(B) and 4.7(C), following, per Digital Subscriber Line. For Primary Rate ISDN local exchange service, the EUCL will be assessed at five times the Multiline Business Subscriber Individual line or trunk rate as set forth in 4.7(C) following, per Primary Rate ISDN Interface.

(M) When an end user is provided a local residence exchange service by the Telephone Company, and if the residential local exchange rate for such end user is a reduced residential local exchange rate based upon a means test that is subject to verification, the EUCL-Residence Subscriber - Primary Residential Local Exchange Service Line or Trunk rate in 4.7(A) following shall be applied to that line and reduced by the amount indicated:

State	Amount	
Alabama	$6.50	(I)
Florida	$6.50	(I)
Georgia	$6.50	(I)
Kentucky	$6.50	(I)
Louisiana	$6.50	(I)
Mississippi	$6.50	(I)
North Carolina	$6.50	(I)
South Carolina	$6.50	(I)
Tennessee	$6.50	(I)

****

4.6 Rate Regulations (Cont'd)

(N) When an end user is provided a local exchange service which is not identified as Centrex, Business Service or Residence Service (e.g., Farm Service, Local Service), the Telephone Company will designate the service as Centrex Type Services, Business Service or Residence Service. The charges as set forth in 4.7 following for Centrex Type Services, Business Subscriber or Residence Subscriber in accordance with the designation will apply.

(O) With the exception of Federal Universal Service (FUS) charges recovered from Special Access end user customers described in Section 4.6(P) following, the Telephone Company will recover the FUS charges through flat-rated, monthly charges. FUS charges, as set forth in 4.7(E), following, will be billed to the end user subscriber of the associated local exchange service, with exception to Lifeline and Reseller customers.

Dormitory lines that receive residential treatment as described in Section 4.6(C) preceding will be assessed the Primary or Additional Residential FUS charge as set forth in 4.7(E) following.

(P) A Federal Universal Service charge will be assessed to end user customers with direct Special Access Service billing. The monthly charge will be applied at the billing account level. The charge will be determined monthly by multiplying the current quarterly Universal Service Fund (USF) contribution factor, listed below, as released by the F.C.C., by the end user customer's monthly, billing account level, Special Access Service charges.

USF Contribution Factor 0.089 (I)

4.7 Rates and Charges

(A) End User Common Line (EUCL) Charge-Residence Subscriber

	USOC	Rate Per Month	
ALL STATES			
(1) Primary Residential Local Exchange Service line or trunk, each	9LM	$ 6.50	
(2) Additional Residential Local Exchange Service line or trunk, each	9LA	6.76	(R)
(3) Basic Rate ISDN Line, per Digital Subscriber Line	9LM	6.76	(R)

All BellSouth marks contained herein and as set forth in the trademarks and servicemarks section of this Tariff are owned by BellSouth Intellectual Property Corporation.
****

4.7 Rate Charges (Cont'd)

(B) End User Common Line (EUCL) Charge - Single Line Business Subscriber

ALL STATES	USOC	Rate Per Month	
(1) Individual line or trunk, each	9LM	$ 6.50	
(2) Basic Rate ISDN Line, per Digital Subscriber Line	9LM	6.76	(R)

(C) End User Common Line (EUCL) Charge - Multiline Business Subscriber

ALABAMA	USOC	Rate Per Month	
-Individual line or trunk, each	9ZR	$ 6.76	(R)
-Basic Rate ISDN, per Digital Subscriber Line	9ZR	6.76	(R)
-Basic Rate ISDN, per Digital Subscriber Line-Centrex subscribers	9Z1	6.76	(R)
-Primary Rate ISDN, per Interface	9ZR	(Note 1)	
FLORIDA			
-Individual line or trunk, each	9ZR	$ 6.76	(R)
-Basic Rate ISDN, per Digital Subscriber Line	9ZR	6.76	(R)
-Basic Rate ISDN, per Digital Subscriber Line-Centrex subscribers	9Z1	6.76	(R)
-Primary Rate ISDN, per Interface	9ZR	(Note 1)	
GEORGIA			
-Individual line or trunk, each	9ZR	$ 6.76	(R)
-Basic Rate ISDN, per Digital Subscriber Line	9ZR	6.76	(R)
-Basic Rate ISDN, per Digital Subscriber Line-Centrex subscribers	9Z1	6.76	(R)
-Primary Rate ISDN, per Interface	9ZR	(Note 1)	
KENTUCKY			
-Individual line or trunk, each	9ZR	$ 6.76	(R)
-Basic Rate ISDN, per Digital Subscriber Line	9ZR	6.76	(R)
-Basic Rate ISDN, per Digital Subscriber Line-Centrex subscribers	9Z1	6.76	(R)
-Primary Rate ISDN, per Interface	9ZR	(Note 1)	

Note 1: For Primary Rate ISDN local exchange service, the EUCL Charge will be assessed at five times the Multiline Business EUCL Charge rate, per Primary Rate ISDN interface.

All BellSouth marks contained herein and as set forth in the trademarks and servicemarks section of this Tariff are owned by BellSouth Intellectual Property Corporation.
****

4.7 Rate Charges (Cont'd)

(C) End User Common Line (EUCL) Charge - Multiline Business Subscriber (Cont'd)

	USOC	Rate Per Month	
LOUISIANA			
-Individual line or trunk, each	9ZR	$ 6.76	(R)
-Basic Rate ISDN, per Digital Subscriber Line	9ZR	6.76	(R)
-Basic Rate ISDN, per Digital Subscriber Line-Centrex subscribers	9Z1	6.76	(R)
-Primary Rate ISDN, per Interface	9ZR	(Note 1)	
MISSISSIPPI			
-Individual line or trunk, each	9ZR	$ 6.76	(R)
-Basic Rate ISDN, per Digital Subscriber Line	9ZR	6.76	(R)
-Basic Rate ISDN, per Digital Subscriber Line-Centrex subscribers	9Z1	6.76	(R)
-Primary Rate ISDN, per Interface	9ZR	(Note 1)	
NORTH CAROLINA			
-Individual line or trunk, each	9ZR	$ 6.76	(R)
-Basic Rate ISDN, per Digital Subscriber Line	9ZR	6.76	(R)
-Basic Rate ISDN, per Digital Subscriber Line-Centrex subscribers	9Z1	6.76	(R)
-Primary Rate ISDN, per Interface	9ZR	(Note 1)	
SOUTH CAROLINA			
-Individual line or trunk, each	9ZR	$ 6.76	(R)
-Basic Rate ISDN, per Digital Subscriber Line	9ZR	6.76	(R)
-Basic Rate ISDN, per Digital Subscriber Line-Centrex subscribers	9Z1	6.76	(R)
-Primary Rate ISDN, per Interface	9ZR	(Note 1)	
TENNESSEE			
-Individual line or trunk, each	9ZR	$ 6.76	(R)
-Basic Rate ISDN, per Digital Subscriber Line	9ZR	6.76	(R)
-Basic Rate ISDN, per Digital Subscriber Line-Centrex subscribers	9Z1	6.76	(R)
-Primary Rate ISDN, per Interface	9ZR	(Note 1)	

Note 1: For Primary Rate ISDN local exchange service, the EUCL Charge will be assessed at five times the Multiline Business EUCL Charge rate, per Primary Rate ISDN interface.

All BellSouth marks contained herein and as set forth in the trademarks and servicemarks section of this Tariff are owned by BellSouth Intellectual Property Corporation.
****

4.7 Rate Charges (Cont'd)

(D) Excess Line Port Charge

ALL STATES

	USOC	Rate Per Month
- Per Basic Rate ISDN Digital Subscriber Line	9ZEBR	$ 2.44
- Per Primary Rate ISDN Interface	9ZEPR	14.00

(E) Federal Universal Service Charge

ALL STATES

- Per Primary Residential Line or Trunk	FUJ1X	$0.61	(I)
- Per Additional Residential Line or Trunk	FUJAX	$0.63	(R)
- Per Single Line Business Line or Trunk	FUJ1X	$0.61	(I)
- Per Multi-Line Business Line or Trunk	FUJMX	$0.78	(R)
- Per Centrex Station Line (Note 1)	FUJMX	$0.09	
- Per Basic Rate ISDN Digital Subscriber Line, Residence Subscriber	FUJAX	$0.85	
- Per Basic Rate ISDN Digital Subscriber Line, Single Line Business Subscriber	FUJAX	$0.85	
- Per Basic Rate ISDN Digital Subscriber Line, Multiline Business Subscriber (Note 2)	FUJAX	$0.85	
- Per Primary Rate ISDN Interface	FUJMX	$5.15	(R)

Note 1: For Centrex-type services (e.g. BellSouth ESSX service, BellSouth MultiServ service, BellSouth MultiServ Plus and BellSouth Centrex), the FUS charge will be assessed at one-ninth the Multiline Business charge.

Note 2: This Basic Rate ISDN FUS charge also applies to Basic Rate ISDN lines that are provided as part of a Centrex system, in lieu of the Centrex Station Line rate.

All BellSouth marks contained herein and as set forth in the trademarks and servicemarks section of this Tariff are owned by BellSouth Intellectual Property Corporation.
****

ACCESS SERVICE

5 - Ordering Options for BellSouth SWA and Special Access (a.k.a. BellSouth SPA) Service

5.1 General

This section sets forth the regulations and orders related to charges for Access Orders for BellSouth SWA and Special Access (a.k.a. BellSouth SPA) Services. These charges are in addition to other applicable charges as set forth in other sections of this tariff.

An Access Order is an order to provide the customer with BellSouth SWA service, Special Access (a.k.a. BellSouth SPA) Service, Fast Packet Access Services, Intra-Office Collocation Cross Connect Service, Physical Access (C)
Cross Connect Service, and Virtual Access Cross Connect Service, or to provide (C)
changes to existing services. An order for BellSouth ADSL service, must be submitted in a manner designated by the Telephone Company, after receipt of an appropriate logon and password that is required to access the ordering system(s). Ordering, Maintenance, NSP logon and password information may be obtained by choosing "Get Started" at the following website: http://www.bellsouth.com/broadband/dsl_solutions/discover.

The Service Installation Guarantee, as set forth in 2.4.9 preceding, is applicable to specified services offered in this tariff. The Service Installation Guarantee is applied on a per service order basis for BellSouth SWA Services. The Service Installation Guarantee is applied on a per circuit basis for Special Access (a.k.a. BellSouth SPA) Services. The Service Installation Guarantee is applied on the Cross Connect elements only for Intra-Office Collocation Cross Connect Service, Physical Access Cross Connect (C)
Service, and Virtual Access Cross Connect Service. (C)

5.1.1 Ordering Conditions

Ordering Conditions for BellSouth ADSL service are as specified in 5.1.1(J).

(A) A customer may order any number of services of the same type and between the same premises on a single Access Order. All details for services for a particular order must be identical except for those for multipoint service.

(B) The customer shall provide all information necessary for the Telephone Company to provide and bill for the requested service. In addition to the order information required in 5.2.2, 5.2.4, 5.2.6, 5.2.7 and 5.2.14 following, the customer must also provide:

- Customer name and premises address(es).
- Billing name and address (when different from customer name and address).
- Customer contact name(s) and telephone number(s) for the following provisioning activities: order negotiation, order confirmation, interactive design, installation and billing.

(M)

Certain material previously appearing on this page now appears on 11th Revised Page 5-1.1

All BellSouth marks contained herein and as set forth in the trademarks and servicemarks section of this Tariff are owned by BellSouth Intellectual Property Corporation.
****

5.1 General (Cont'd)

5.1.1 Ordering Conditions (Cont'd)

(C) BellSouth SWA service orders for BellSouth SWA FGA and BellSouth SWA LSBSA shall be in lines. (M) (M)

(D) BellSouth SWA Service orders for BellSouth SWA FGB, BellSouth SWA FGD, BellSouth SWA TSBSA 1, BellSouth SWA TSBSA 3 and BellSouth IPTG Terminating service shall be in trunks. (M) (M) (M)

(E) The day upon which the customer has provided to the Telephone Company a firm commitment for the service and complete and accurate information to allow for the processing of the Access Order by three o'clock p.m. Eastern Standard Time* is the Application Date. The Telephone Company will release an optional initial Pending Order Confirmation, which will include the Telephone Company order number and circuit identification. At the customer's request, when the Telephone Company facility availability is verified, either a Firm Order Confirmation, which will include critical date information, or a Design and Ordering Confirmation, which will include design as well as critical date information, will be released. Critical date information will include the service date. The service date is the date service is to be made available to the customer and billing will commence.

(F) A Pending Order Confirmation is available for orders for Telephone Company-provided switched access dedicated transport services, where ordered separately from other switched access services, and for Telephone Company-provided special access services. A Design and Ordering Confirmation is not available for orders submitted by end users. A Pending Order Confirmation and a Design and Ordering Confirmation are not available for orders for services provided jointly with another Exchange Telephone Company.

(M)

*Access Orders received after three o'clock p.m. EST will be processed the next business day, which will be the Application Date.

Certain material now appearing on this page previously appeared on 17th Revised Page 5.1

Certain material previously appearing on this page now appears on Original Page 5-1.1.1

All BellSouth marks contained herein and as set forth in the trademarks and servicemarks section of this Tariff are owned by BellSouth Intellectual Property Corporation.
****

ACCESS SERVICE

5 - Ordering Options for BellSouth SWA and Special Access (a.k.a. BellSouth SPA) Service (N)

5.1 General (Cont'd) (N)

5.1.1 Ordering Conditions (Cont'd) (N)

(G) Except for services listed in (H)(1) below, the following charges will apply for the installations, moves or rearrangement of services of Switched and Special Access service orders with an agreed upon service date interval of four business days or less following the Application Date. These charges are in addition to other applicable Switched and Special Access installation, move and rearrangement of service non-recurring charges. These charges will apply except for conversions made at the request of the Customer from a lower to a higher order of service as provided for in Section 2.4.8(A)(4) of this Tariff. The higher order of services are set forth in Section 2.4.8(A)(4)(b)(4) of this Tariff. This charge does not apply to services provided on a Special Services Arrangement or on an Individual Case Basis. In the event the agreed upon Service Date, as set forth above, is not met, these charges will not be applied. (M)(M)(M)(M)(M)(M)(M)(M)(T)(M)(T)(M)(T)(M)(M)

	Rate Per Service Order	USOC	
Per Special Access Service Order	$345.00	SOCSP	(M)
Per Switched Access Service Order	$295.00	SOCSW	(M)

Certain material now appearing on this page previously appeared on 10th Revised Page 5-1.1

All BellSouth marks contained herein and as set forth in the trademarks and servicemarks section of this Tariff are owned by BellSouth Intellectual Property Corporation.
****

ACCESS SERVICE

5 - Ordering Options for BellSouth SWA and Special Access (a.k.a. BellSouth SPA) Service

5.1 General (Cont'd)

5.1.1 Ordering Conditions (Cont'd)

(H) Service Date Advancement

(1) The regulations and rates specified herein are applicable only for the following services:

- Metallic Service (a.k.a. BellSouth SPA Metallic) (T)
- Telegraph Grade Service (a.k.a. BellSouth SPA Telegraph) (T)
- Voice Grade Service (a.k.a. BellSouth SPA VG) (T)
- WATS Access Line (WAL) Service (a.k.a. BellSouth SPA WATS Lines) (T)
- Program Audio Service (a.k.a. BellSouth SPA Program Audio) (T)
- Wideband Analog Service (a.k.a. BellSouth SPA Wideband Analog) (T)
- Wideband Data Service (a.k.a. BellSouth SPA Wideband Data) (T)
- Digital Data Access Service (a.k.a. BellSouth SPA DS0 Digital Data) (T)
- DS1 (a.k.a. BellSouth SPA DS1) (T)
- BellSouth SPA DS1 Diverse
- SMARTPath Service (a.k.a. BellSouth SPA DS1 Shared Ring) (T)
- BellSouth Exchange Access Frame Relay Service - DS0 and DS1 (T)
- BellSouth Exchange Access Asynchronous Transfer Mode Service - DS1 (T)
- Managed Shared Frame Relay Service - DS0 and DS1 (T)
- Managed Shared Asynchronous Transfer Mode Service - DS1 (T)
- LightGate Service (a.k.a. BellSouth SPA Point to Point) -DS3 (N)
- SMARTPath DS3 Transport Service (a.k.a. BellSouth SPA DS3 Shared Ring) (N)
- BellSouth SPA Managed Shared Network Service -DS3 (N)
- SMARTRing Service (a.k.a. BellSouth SPA Dedicated Ring) -DS3 (N)

(2) Initial Access Order

When placing an Access order for the installation, move or rearrangement of services, the customer may request that the service date for services with standard or negotiated intervals be advanced to an earlier service date. If the Company agrees to advance the service date, a Service Date Advancement Charge will apply as specified herein.

(a) For services with standard intervals, a Service Date Advancement Charge will apply for each day the service date is less than the standard interval.

(b) For SPA DS0 and DS1 services with negotiated intervals, which are designated for special handling according to published service date interval guidelines, with an agreed upon interval of less than eight business days following the Application Date, a Service Date Advancement charge will apply for each day the service date is advanced from eight business days. (C)

(c) For SPA DS3 services with negotiated intervals, which are designated for special handling according to published service date interval guidelines, with an agreed upon interval of less than twenty business days following the Application Date, a Service Date Advancement charge will apply for each day the service date is advanced from twenty business days. (N) (N) (N) (N) (N) (N)

(M)

Certain material previously appearing on this page now appears on 7th Revised Page 5-1.2.1 of this Tariff.

All BellSouth marks contained herein and as set forth in the trademarks and servicemarks section of this Tariff are owned by BellSouth Intellectual Property Corporation.

****

5.1.1 Ordering Conditions (Cont'd)

(H) Service Date Advancement (Cont'd)

(2) Initial Access Orders (Cont'd) (N)

(d) Irrespective of whether the Company meets the agreed upon service date for an advanced Access order but does provide the service prior to the standard interval or negotiated interval (pursuant to (2) and (3) herein) for the service ordered, a Service Date Advancement charge will apply for each day the Company completes the Access order in advance of the standard or negotiated interval. If the Company completes an Access order after the standard interval or negotiated interval, a Service Date Advancement charge will not apply. (M)(T) (M) (M) (M) (M) (M) (M) (C)(M) (M)

(3) Pending Access Orders

A customer may also request a change of the service date on a pending Access order. Should the Company agree to change the service date the following regulations will apply:

(a) For services with standard intervals where the service interval between the Subsequent Request Date and the Subsequent Due Date is four business days or less, a Service Date Advancement charge will apply for each day the new interval is less than the standard interval.

(b) For SPA DS0 and DS1 services with negotiated intervals, where the service interval between the Subsequent Request Date and the Subsequent Due Date is less than 8 business days, a Service Date Advancement Charge will apply for each day the revised service date is advanced from 8 business days. When the interval between the Subsequent Request Date and the Subsequent Due Date is 8 business days or greater, Service Date Advancement charges will not apply. (C)

(c) For SPA DS3 services with negotiated intervals, where the service interval between the Subsequent Request Date and the Subsequent Due Date is less than 20 business days, a Service Date Advancement Charge will apply for each day the revised service date is advanced from 20 business days. When the interval between the Subsequent Request Date and the Subsequent Due Date is 20 business days or greater, Service Date Advancement charges will not apply. (N) (N) (N) (N) (N) (N) (N)

(d) Advancement of the service date on pending Access orders will also incur a Service Date Change charge as set forth in 5.3 of this Tariff. (T)

(M)

Certain material now appearing on this page previously appeared on 10th Revised Page 5-1.2.

Certain material previously appearing on this page now appears on Second Revised Page 5-1.2.1.1.

All BellSouth marks contained herein and as set forth in the trademarks and servicemarks section of this Tariff are owned by BellSouth Intellectual Property Corporation.

****

ACCESS SERVICE (N)

5 - Ordering Options for BellSouth SWA and Special Access (a.k.a. BellSouth SPA) Service (N)

5.1 General (Cont'd) (N)

5.1.1 Ordering Conditions (Cont'd) (N)

(H) Service Date Advancement (Cont'd) (N)

(4) Customer-Missed Appointments (M)
When the customer has requested advancement of a service date, and the Company has completed the necessary work for the advanced service date and arrives at the customer's premises to install the service but the customer is not ready to accept the service pursuant to regulations in 2.1.4 and 2.3.3 of this Tariff, the customer will be assessed a Service Date Advancement-Missed Appointment charge, as set forth in (9)(b), following for the additional Company resources expended to advance the service date as set forth in (6)(d) following. An example of when this charge may apply is provided in (8) following. (M)

(5) Rescheduled Appointments (M)
A minimum service interval of three business days is required when a customer reschedules a service date (i.e., three business days between the Subsequent Request Date and Subsequent Due Date). (M)

Should the customer requests a service date with an interval of less than three business days between the Subsequent Request Date and the Subsequent Due Date, a Service Date Advancement charge as set forth in (9)(a) following will apply for each day the new interval is less than three business days. In addition, a Service Date Change charge and a Service Date Change-Additional Dispatch charge will apply as specified in 5.3(C)(1)(e), following. (M)

Certain material now appearing on this page previously appeared on 6th Revised page 5-1.2.1.

All BellSouth marks contained herein and as set forth in the trademarks and servicemarks section of this Tariff are owned by BellSouth Intellectual Property Corporation.
****

ACCESS SERVICE (N) (x)

5 - Ordering Options for BellSouth SWA and Special Access (a.k.a.BellSouth SPA) Service (N) (x)

5.1 General (Cont'd) (N) (x)

5.1.1 Ordering Conditions (Cont'd) (N) (x)

(H) Service Date Advancement (Cont'd) (N) (x)

(6) Description of Charges (N) (x)

(a) Service Date Change Charge: This charge represents the administrative resources associated with a customer initiated change to an Access Order that results in a change of the service date. A Service Date Change Charge will apply as set forth in 5.3(C)(1), following. (N) (x)

(b) Service Date Change-Additional Dispatch Charge: This charge represents the resources associated with a Company technician's dispatch to the customer's premises to install, move or rearrange a service. This charge only applies when the customer supplements an Access Order to be completed on a new service date due to the customer not allowing the technician to complete the Access Order on a previous service date. This charge will apply as set forth in 5.3(C)(1). (N) (x)

(c) Service Date Advancement Charge: This charge represents the additional resources associated with advancing a service date (i.e., monitoring, reprioritizing and rescheduling service orders, and accelerating pre-defined daily work activities) at the customer's request and is assessed only when the Company completes the Access Order or the customer cancels the order per (7)(b) following. This charge will apply as set forth in (9)(a), following. (N) (x)

(d) Service Date Advancement-Missed Appointment Charge: This charge represents the additional resources associated with advancing a service date (i.e., monitoring, reprioritizing and rescheduling service orders, and accelerating pre-defined daily work activities) and is only assessed when the customer does not allow the Company to complete an Access Order on an advanced Service Date. This charge will apply as set forth in (9)(b), following. (N) (x)

(x) Issued to become effective on May 10, 2003 under authority of Special Permission NO. 03-051

****

5.1 General (Cont'd)
5.1.1 Ordering Conditions (Cont'd)

(H) Service Date Advancement (Cont'd)

(7) Restrictions

(a) The Service Installation Guarantee, specified in 2.4.9 preceding, will not apply on Access orders with advanced service dates.

(b) When the customer cancels an Access order for the installation, move or rearrangement of services, a Service Date Advancement charge may apply in accordance with terms and conditions for cancellation percentages on nonrecurring charges as set forth in 5.4 following.

(8) Application of Rates and Charges

(a) For services with standard intervals, a Service Date Advancement charge, specified in (9)(a) following, will apply on a per circuit basis for each day the service date is advanced from the standard interval for services set forth in (1) above.

(b) For SPA DSO and DS1 services with negotiated intervals with an agreed upon interval of less than eight business days following the Application Date, a Service Date Advancement charge, specified in (9)(a) following, will apply for each day the service date is advanced from eight business days. When the interval between the Subsequent Request Date and the Subsequent Due Date is 8 business days or greater, Service Date Advancement charges will not apply. (C)

(c) For SPA DS3 services with negotiated intervals with an agreed upon interval of less than twenty business days following the Application Date, a Service Date Advancement charge, specified in (9)(a) following, will apply for each day the service date is advanced from twenty business days. When the interval between the Subsequent Request Date and the Subsequent Due Date is 20 business days or greater, Service Date Advancement charges will not apply. (N) (N) (N) (N) (N) (N) (N)

(M)

Certain material previously appearing on this page now appears on 5th Revised Page 5-1.3.1

All BellSouth marks contained herein and as set forth in the trademarks and servicemarks section of this Tariff are owned by BellSouth Intellectual Property Corporation.
****

ACCESS SERVICE (N)

5 - Ordering Options for BellSouth SWA and Special Access (a.k.a. BellSouth SPA) Service (N)

5.1 General (Cont'd) (N)

5.1.1 Ordering Conditions (Cont'd) (N)

(H) Service Date Advancement (Cont'd) (N)

(8) Application of Rates and Charges (Cont'd) (N)

(d) A Service Date Advancement-Missed Appointment charge in (9)(b), following, will apply per circuit, per occurrence for services in (1) above for Company resources expended to advance a service date. Following is an example of when this charge may apply for an order with a standard interval: (M)(T)

- A customer submits an Access order for a DS1 (a.k.a., BellSouth SPA DS1) service to be installed at the customer's premises. The Access Order has a requested service date that is two business days less than the standard interval for DS1 (a.k.a., BellSouth SPA DS1) service. The Company agrees to the requested advanced service date and informs the customer that Service Date Advancement charges will apply and will be billed to the customer upon the Company installing and completing the Access order. However, when a Company technician arrives to install the DS1 (a.k.a., BellSouth SPA DS1) service on the advanced service date, the Company cannot gain access to the customer's premises to install the service and complete the order. Therefore, the customer is billed a Service Date Advancement-Missed Appointment charge (i.e., $300 per circuit per occurrence) for the additional resources required to advance the service date. Had the Company technician been allowed to install and complete the order on the advanced service date, the customer would have been billed the normal Service Date Advancement charges provided in (9)(a) following for advancing the service date. (M)

(M)

Certain material now appearing on this page previously appeared on 9th Revised Page 5-1.3.

Certain material previously appearing on this page now appears on Second Revised Page 5-1.3.2

All BellSouth marks contained herein and as set forth in the trademarks and servicemarks section of this Tariff are owned by BellSouth Intellectual Property Corporation.
****

ACCESS SERVICE

5 - Ordering Options for BellSouth SWA and Special Access (a.k.a. BellSouth SPA) Service

5.1 General (Cont'd) (N)

5.1.1 Ordering Conditions (Cont'd) (N)

(H) Service Date Advancement (Cont'd) (N)

(9) Rates and Charges (M)

	Nonrecurring Charge	USOC	
(a) Service Date Advancement			(M)
- SPA DS0 and DS1 Services, Per Circuit, Per Day	$200.00	SDASP	(N) (M)
- SPA DS3 Services, Per Circuit, Per Day	$200.00	SDASQ	(N) (N)
(b) Service Date Advancement-Missed Appointment			(M) (M)
- SPA DS0 and DS1 Services, Per Circuit, Per Occurrence	$300.00	SDAMA	(N) (M)
- SPA DS3 Service, Per Circuit, Per Occurrence	$300.00	SDAMP	(N) (N)

(10) The Service Date Advancement charges, as set forth in (9) above, is in addition to other applicable nonrecurring charges associated with services listed in 5.1.1(H)(1) preceding. These charges do not apply when the customer requests conversion to a higher order of service as provided in Section 2.4.8(A)(4) of this Tariff. These charges do not apply to services provided in a Special Services Arrangement or to services provided on an Individual Case Basis. (M) (M) (M)(T) (M) (M)(T) (M) (M)

(11) Should the customer fail to pay the properly assessed Service Date Advancement charge, the Company may elect not to accept the customer's future requests to advance a service date while there is a billed amount outstanding. Any future requests for service from the customer will be processed with the standard or negotiated interval, as appropriate, until outstanding Service Date Advancement charges owed by the customer have been paid. (M) (M) (M) (M) (M) (M) (M)

(12) When costs other than additional engineering and labor, as set forth in Section 13 of this Tariff, are to be incurred when an order is advanced, the Company will develop these costs in accordance with Special Construction terms and conditions as set forth in the BELLSOUTH TELECOMMUNICATIONS, INC.'s Tariff F.C.C. No. 2. Authorization to incur the costs and to bill the customer will be in accordance with the terms and conditions set forth in the Special Construction Tariff. (M) (M) (M) (M) (M) (M) (M) (M)

Certain material now appearing on this page previously appeared on 4th Revised Page 5-1.3.1.

All BellSouth marks contained herein and as set forth in the trademarks and servicemarks section of this Tariff are owned by BellSouth Intellectual Property Corporation.
****

5.1 General (Cont'd)

5.1.1 Ordering Conditions (Cont'd)

(I) Discount for Long Service Intervals on BellSouth SPA DS1 Services

(1) If a customer's initial order for BellSouth SPA DS1 service has a service interval of 16 business days or greater, the customer will receive a twenty percent (20%) discount on the nonrecurring charges. The 20% discount will only apply to BellSouth SPA DS1 service with standard intervals. Should the customer subsequently change the service date to a service date with an interval that is less than 16 business days, full nonrecurring charges will apply. If the revised service date is less than the standard interval for the service, a Service Date Advancement Charge, as specified in (H) above, will apply in addition to a Service Date Change Charge as set forth in 5.3 of this Tariff.

(2) The 20% discount on nonrecurring charges will apply to BellSouth SPA DS1 local channels and interoffice channels for installations, moves or rearrangement of services.

(3) The Service Installation Guarantee in 2.4.9 preceding will apply should the Company fail to meet the agreed upon service date which has a 16 business days or greater service interval. The customer will only receive a credit amount equal to the 20% discounted nonrecurring charges associated with the services ordered.

The time required to provision the service (i.e., the interval between the Application Date and the Service Date) is known as the service interval. Such intervals will be established in accordance with published service date interval guidelines which are available to customers upon request, whether the customer's service is subject to standard or negotiated intervals. The customer may request a service date other than that established pursuant to the service date interval guidelines, and the Telephone Company, where possible, will establish the service date in accordance with such request, subject, however, to other applicable provisions of this tariff. (M)

A customer who initiates a conversion (rollover) of a DS1 (a.k.a. BellSouth SPA DS1) to a DS3 High Capacity (a.k.a. BellSouth SPA DS3) service is also responsible for submitting Network Channel Interface (NCI) Code Update requests, either mechanically or manually, on all sub-DS1 level circuits that ride the channelized DS1 High Capacity (a.k.a. BellSouth SPA DS1) service being rolled over. The Telephone Company and customer will work cooperatively to establish the number of circuits which may be submitted monthly for purposes of mechanical NCI Code updates associated with rollovers of DS1 High Capacity service (a.k.a. BellSouth SPA DS1) to DS3 High Capacity (a.k.a. BellSouth DS3) service. (M)

A customer who converts from an existing feature group service to an equivalent unbundled service (i.e., BellSouth SWA FGA to BellSouth SWA LSBSA, BellSouth SWA FGB to BellSouth SWA TSBSA 1, BellSouth SWA FGC to BellSouth SWA TSBSA 2, and BellSouth SWA FGD to BellSouth SWA TSBSA 3) shall do so on no lower than an end office level. The Telephone Company and customer will work cooperatively to accomplish these conversions. (M)

Certain material now appearing on this page previously appeared on 5th Revised Page 5-2

****

ACCESS SERVICE

5 - Ordering Options for BellSouth SWA and Special Access (a.k.a. BellSouth SPA) Service (Cont'd)

5.1 General (Cont'd)

5.1.1 Ordering Conditions (Cont'd)

(J) BellSouth ADSL Service and BellSouth Session Based DSL Service (C)

The customer must place an electronic (Internet or "web-based" interface) order utilizing a Telephone Company-specified order and response system to request VCs be provisioned to a customer-designated end-user premises. The Telephone Company-specified electronic order and response system allows a BellSouth ADSL service and/or BellSouth Session Based DSL (C) service customer to place orders and receive response from the Telephone (C) Company about a request for service. A customer identification and password for access to the appropriate order and response system(s) are provided when a customer meets the requirements specified in (1)(a) following.

(1) Ordering Conditions

(a) The customer shall provide all information necessary for the Telephone Company to provide and bill for the BellSouth ADSL service and/or BellSouth Session Based DSL service. In addition to (C) the order information required in 5.2.14 following, the customer must also provide:

- Customer name and address(es)
- Customer billing name and address (when different from customer name and address
- Customer contact name(s) and telephone number(s) for the following provisioning activities: order negotiation, order confirmation, interactive design, installation and billing.
- Customer electronic mail address
- When requested, an end-user letter of authorization
- End-user's Local Exchange service provider, Local Exchange service telephone number and premises address
- Network Service Provider (NSP)
- Type of request
- BellSouth XAATMS, MSATMS or EUA information
- Circuit identification of the transport facility between the customer's premises and its designated serving wire center
- Virtual Path Identifier (VPI) and Virtual Channel Identifier (VCI)
- End-user VPI and VCI
- Requested Due Date
- Requested VC data rate
- Whether VCs are part of a multiple VC arrangement and, if so, associated VPI and VCI for each VC and QoS for each VC (C)

All BellSouth marks contained herein and as set forth in the trademarks and servicemarks section of this Tariff are owned by BellSouth Intellectual Property Corporation.
****

5.1 General (Cont'd)

5.1.1 Ordering Conditions (Cont'd)

(J) BellSouth ADSL Service and BellSouth Session Based DSL Service (C)

(1) Ordering Conditions (Cont'd)

(b) (Cont'd)

When a customer requests End-User Aggregation, the customer must additionally specify: (C)

- The primary NSP
- The number of sessions and destinations per line
- Domain Group(s) (DG) and Domain Group Name(s) (DGN) associated with each EUA dedicated transport.
- Domain Group List(s) (DGL) associated with each DG.
- Domain Name(s) (DN) associated with each EUA DGL.
- DGLs that each end-user may access

EUA does not utilize VPI/VCI information

Furthermore, End-User Aggregation must be specified when initially ordering a transport facility to be utilized in conjunction with BellSouth ADSL service, End-User Aggregation. End-User Aggregation (N)
is the only option for the customer when BellSouth Session Based DSL (N)
service is ordered. Connection to End-User Aggregation, is (C)
accomplished with facilities dedicated to the transport of End-User (C)
Aggregation terminated in Company-specified Central Offices that are (C)
capable of providing End-User Aggregation. Interstate dedicated (C)
Special Access (a.k.a. BellSouth SPA) service rates, charges and
regulations are specified in Section 7 of this tariff. End-User (C)
Aggregation transport facility may not be terminated in BellSouth (C)
XAATMS or MSATMS. BellSouth ADSL service, End-User Aggregation, is required when the customer requests BellSouth ADSL service "Multiple Destinations" and/or "Multiple Sessions."

(c) The day upon which the customer has provided to the Telephone Company a firm commitment for the service and complete and accurate information to allow for the processing of the order is the Application Date.

(d) A customer who requests a rearrangement of Virtual Circuit (VC) from/to an arrangement provisioned as either XAATMS/MSATM or End-User Aggregation, is also responsible for submitting to the Telephone Company the information that will enable the Telephone Company to complete that rearrangement. The required information is as specified in 5.2.7(A), preceding. (C)

All BellSouth marks contained herein and as set forth in the trademarks and servicemarks section of this Tariff are owned by BellSouth Intellectual Property Corporation.
****

ACCESS SERVICE

5 - Ordering Options for BellSouth SWA and Special Access (a.k.a. BellSouth SPA) Service (Cont'd)

5.1 General (Cont'd)

5.1.1 Ordering Conditions (Cont'd)

(J) BellSouth ADSL Service and BellSouth Session Based DSL Service (C)

(1) Ordering Conditions (Cont'd)

(e) A customer may request a modification of its BellSouth ADSL service and/or BellSouth Session Based DSL service order at any time prior to the due date. The Telephone Company will make every effort to accommodate the requested modification when it is able to do so with the normal work force assigned to complete such a modification within normal business hours, without charge. Customer-requested modifications that cannot be completed prior to the due date will be completed as if for new service as specified in 7.4.29. (C)

5.1.2 Provision of Other Services

(A) Testing Service, Additional Labor, and Special Facilities Routing shall be ordered with an Access Order or as set forth in (B) following. The rates and charges for these services, as set forth in other sections of this tariff, will apply in addition to the ordering charges set forth in this section and the rates and charges for the Access Service with which they are associated.

(B) With the agreement of the Telephone Company, the items listed in (A) preceding may subsequently be added to the order at any time, up to and including the service date for the Access Service. When added subsequently, charges for a design change as set forth in 5.3(C)(3) following will apply when an engineering review is required.

(C) Additional Engineering is not an ordering option, but will be applied to an Access Order when the Telephone Company determines that Additional Engineering is necessary to accommodate a customer request. Additional Engineering will only be required as set forth in 13.1 following. When it is required, the customer will be so notified and will be furnished with a written statement setting forth the justification for the Additional Engineering as well as an estimate of the charges.

If the customer agrees to the Additional Engineering, a firm order will be established. If the customer does not want the service or facilities after being notified that Additional Engineering of Telephone Company facilities is required, the order will be withdrawn and no charges will apply. Once a firm order has been established, the total charge to the customer for the Additional Engineering may not exceed the estimated amount by more than 10%

The regulations, rates and charges for Additional Engineering are as set forth in 13.1 following and are in addition to the regulations, rates and charges specified in this section

All BellSouth marks contained herein and as set forth in the trademarks and servicemarks section of this Tariff are owned by BellSouth Intellectual Property Corporation.
****

ACCESS SERVICE

5 - Ordering Options for BellSouth SWA and Special Access (a.k.a. BellSouth SPA) Service (Cont'd)

5.1.3 Special Construction

The regulations, rates and charges for special construction are set forth in BELLSOUTH TELECOMMUNICATIONS, INC.'s TARIFF F.C.C. NO. 2 and are in addition to the regulations, rates and charges specified in this tariff.

5.2 Access Order

5.2.1 General

An Access Order is used by the Telephone Company to provide a customer access service as follows:

(A) BellSouth SWA service as set forth in Section 6 following
(B) Special Access (a.k.a. BellSouth SPA) Service as set forth in Section 7 following
(C) BellSouth Expanded Interconnection Service as set forth in Section 20 of this Tariff. (T) (T)
(D) Other Services as set forth in 5.1.2 preceding.

Because a standardized format has not been identified for ordering xDSL service(s) by the Ordering and Billing Forum (OBF), a request for BellSouth ADSL service, will be considered to be an Access Order without any other requirement than as set forth in this tariff for BellSouth ADSL service.

5.2.2 Information Required

When placing an order for Access Service, the customer shall provide, at a minimum, the following information:

All BellSouth marks contained herein and as set forth in the trademarks and servicemarks section of this Tariff are owned by BellSouth Intellectual Property Corporation.
****

ACCESS SERVICE

5 - Ordering Options for BellSouth SWA and Special Access (a.k.a. BellSouth SPA) Service (Cont'd)

5.2 Access Order (Cont'd)

5.2.2 Information Required (Cont'd)

(A) For BellSouth SWA FGA and BellSouth SWA LSBSA Service, the customer shall specify:

(1) Number of lines
(2) First point of switching (i.e., the dial tone office)
(3) Directionality of the service
(4) BellSouth SWA Transport Options, if any
(5) Local Switching Options (including BSEs), if any
(6) Whether the off-hook supervisory signaling is to be provided by the customer's equipment or if it is to be forwarded by the customer's equipment when the called party answers.
(7) If the service is to be provided with an extension to a different exchange.
- the customer's premises at which the extension is to be terminated
(8) Percent Interstate Usage (PIU) as specified in 2.3.10 preceding.
(9) Provide Connecting Facility Assignment (CFA), if associated with a high capacity facility.
(10) For BellSouth SWA Local Channel and BellSouth SWA Dedicated Interoffice Channel, the capacity.

(B) For BellSouth SWA FGB and BellSouth SWA TSBSA 1 service, the customer shall specify:

(1) The number of trunks
(2) For trunks to an end office, the end office
(3) For trunks to an Access Tandem
(a) The Access Tandem Switch
(b) An Estimate of the amount of traffic it will generate to and/or from each end office subtending the access tandem (to assist the Telephone Company in its own efforts to project further facility requirements.)
(4) BellSouth SWA Transport Options, if any
(5) Local Switching Options (including BSEs), if any
(6) For terminating only access, whether the trunks are to arranged in trunk group arrangements or provided as single trunks
(7) The traffic type using the categories specified in 6.1.1(I) following to enable efficient provisioning and billing functions
(8) Percent Interstate Usage (PIU) as specified in 2.3.10 preceding.
(9) Provide Connecting Facility Assignment (CFA), if associated with a high capacity (a.k.a. BellSouth High Capacity) facility.
(10) For BellSouth SWA Local Channel and BellSouth SWA Dedicated Interoffice Channel, the capacity.

(D)(x)1
(D)(x)
(D)(x)

(x) In compliance with the order of the Federal Communications Commission In The Matter of Access Charge Reform; Price Cap Performance Review for Local Exchange Carriers; Transport Rate Structure and Pricing, and End User Common Line Charges, CC Dkt. Nos. 96-262, 94-1, 91-213, 95-72, released May 16, 1997.

****

5 - Ordering Options for BellSouth SWA and Special Access (a.k.a. BellSouth SPA) Service (Cont'd)

5.2 Access Order (Cont'd)

5.2.2 Information Required (Cont'd)

(C) For BellSouth SWA FGC, BellSouth SWA FGD, BellSouth SWA TSBSA 2 and BellSouth SWA TSBSA 3 service, the customer shall specify:

(1) The number of BellSouth SWA FGD and BellSouth SWA TSBSA 3 trunks

- for trunks ordered to an end office, the end office
- for trunks ordered to an Access Tandem, the Access Tandem Switch
- for trunks with coin sent-paid capability ordered to a TOPS tandem, the TOPS tandem switch
- an estimate of the amount of traffic it will generate to and/or from each end office subtending the access and/or TOPS tandem (to assist the Telephone Company in its own efforts to project further facility requirements).

(2) BellSouth SWA Transport Options, if any (D)(x)
(3) Local Switching Options (including BSEs), if any (D)(x)
(4) The traffic type using the categories specified in 6.1.1(I) following, to enable efficient provisions and billing functions. (D)(x)
(5) Provide Connecting Facility Assignment (CFA), if associated with a high capacity (a.k.a. BellSouth High Capacity) facility.
(6) For BellSouth SWA Local Channel and BellSouth SWA Dedicated Interoffice Channel, the capacity.

The coin capable end offices and TOPS tandem switches are identified in the Wire Center Section of the NATIONAL EXCHANGE CARRIER ASSOCIATION (NECA) TARIFF F.C.C. NO. 4.

(D) For BellSouth SWA FGD and BellSouth SWA TSBSA 3 with BellSouth SWA CCSAC, in addition to the information listed in (C) preceding, the customer shall specify:

(1) BellSouth SWA CCSAC Local Switching Options, if any

(x) In compliance with the order of the Federal Communications Commission In The Matter of Access Charge Reform; Price Cap Performance Review for Local Exchange Carriers; Transport Rate Structure and Pricing, and End User Common Line Charges, CC Dkt. Nos. 96-262, 94-1, 91-213, 95-72, released May 16, 1997.

****

ACCESS SERVICE

5 - Ordering Options for BellSouth SWA and Special Access (a.k.a. BellSouth SPA) Services (Cont'd)

5.2.2 Information Required (Cont'd)

(D) (Cont'd)

(2) For CCS7 Signaling Connections, specification of the level of diversity in its network, as defined in Technical Publication TR-TSV-000905, and the BellSouth Guidelines to Technical Publication TR-TSV-000905.

(3) Service Installation Guarantees, as set forth in 2.4.9 preceding, are not applicable for the installation of CCSAC signaling.

(E) For BellSouth SWA FGD and BellSouth SWA TSBSA 3 with 64 Clear Channel Capability (CCC), in addition to the information listed in (C) and (D) preceding, the customer shall specify 64 CCC Local Switching Options, if any, with Superframe or Extended Superframe, as specified in Section 6.1.3(A)(6)(f) and 7.2.9(E)(5).

(F) For BellSouth IPTG Terminating service, as set forth in 6.2.14 following, the customer shall: (N) (N)

(1) Coordinate their Access Order through a customer account team (N)

(2) Populate fields on the Access Order with information provided by the customer account team (N) (N)

5.2.3 Traffic Engineering Responsibilities

(A) The customer is responsible to assure that sufficient access facilities have been ordered to handle its traffic.

****

5 - Ordering Options for BellSouth SWA and Special Access (a.k.a. BellSouth SPA) Services (Cont'd) (T)1 (T)

5.2 Access Order (Cont'd)

5.2.3 Traffic Engineering Responsibilities (Cont'd)

(B) Determination of Trunks

(1) When ordering BellSouth SWA service, the trunks may be determined by the customer in the following manner. For each day the customer shall determine the highest number of trunks in use for a single hour. The customer shall, for the same hour period (i.e., busy hour), pick the twenty consecutive business days in a calendar year which add up to the largest number of trunks in use. The customer shall then determine the average busy hour trunks by dividing the largest number of trunks in use figure, for the same hour period, for the twenty consecutive business day period by 20. This computation shall be performed for each end office and/or access tandem the customer wishes to serve. (T)

(2) If data to develop a twenty consecutive day period is not available, the customer may use a twenty day period that contains as many consecutive days as is available.

(C) Determination of CCS7 Signaling Connections and Terminations

The customer shall work cooperatively with the Telephone Company to determine the number of CCS7 Signaling Connections and CCS7 Signaling Terminations required to handle its signaling traffic.

5.2.4 BellSouth SWA 8XX Toll Free Dialing Ten Digit Screening Service (T)1

For BellSouth SWA 8XX Toll Free Dialing Ten Digit Screening Service, as described in 6.2.5(B) following, the customer shall order in the same manner which is set forth preceding for ordering BellSouth SWA FGD and BellSouth SWA TSBSA 3 except that customers must order BellSouth SWA FGD and BellSouth SWA TSBSA 3 to all access tandems or direct connections to all end offices designated by the Telephone Company as Service Switching Points for BellSouth SWA 8XX Toll Free Dialing Ten Digit Screening Service within the LATA. Direct trunk routes cannot be provided unless the end office is equipped to provide the customer identification function. All traffic originating from end offices not equipped to provide the customer identification function require routing via the serving access tandem at which the function is available. Service must be ordered accordingly. (T)1 (T) (T) (T) (T)

****

5 - Ordering Options for BellSouth SWA and Special Access (a.k.a. BellSouth SPA) Service (Cont'd) (S) (S)

5.2 Access Order (Cont'd)

5.2.4 BellSouth SWA 8XX Toll Free Dialing Ten Digit Screening Service (Cont'd) (S)

The customer is also responsible for reporting to the Telephone Company the percent interstate usage (PIU) for BellSouth SWA 8XX Ten Digit Screening Service as set forth in 2.3.10 preceding. (S) (S)

(D)(x)
(D)(x)
(D)(x)
(D)(x)
(D)(x)
(D)(x)
(D)(x)
(D)(x)
(D)(x)
(D)(x)
(D)(x)
(D)(x)
(D)(x)
(D)(x)
(D)(x)
(D)(x)

5.2.5 BellSouth SWA Service to a Remote Switching Office (S)

When a customer desires BellSouth SWA service to an end office that is a remote switching office, the customer must order to the host office which controls the remote switching office since all traffic to and/or from a remote switching office must be routed through the host office. (S)

(D)(x)
(D)(x)
(D)(x)

(x) Filed under the authority of CC Docket No. 93-129, In the Matter of 800 Data Base Access Tariffs and the 800 Service Management System Tariff and CC Docket 86-10, Provision of 800 Services, released October 28, 1996.

(S) Originally filed under Transmittal No. 377 and subsequently deferred under Transmittal No. 387 until January 15, 1997.

****

ACCESS SERVICE

5 - Ordering Options for BellSouth SWA and Special Access (a.k.a. BellSouth SPA) Service (Cont'd) (T) (T)

5.2 Access Order (Cont'd)

5.2.6 BellSouth Directory Assistance Access Service (T)

For BellSouth Directory Assistance Access Service, the customer shall specify the number of trunks from the customer's premises to the Directory Assistance location. Unless direct routing is specified by the customer, BellSouth Directory Assistance Access service will be provided with a BellSouth SWA FGB, BellSouth SWA FGC and BellSouth SWA TSBSA Service. The customer shall also specify which BellSouth SWA FGB, BellSouth SWA FGC and BellSouth SWA FGD or BellSouth SWA TSBSA BellSouth service trunk group is to be associated with the BellSouth Directory Assistance Access Service. (T) (T) (T) (T) (T) (T) (T) (T) (T)

****

5.2 Access Order (Cont'd)

5.2.7 Special Access Service (a.k.a. BellSouth SPA) and BellSouth SWA Transport Service

(A) For all Special Access (a.k.a. BellSouth SPA) Services other than BellSouth ADSL service, the customer must specify the customer premises or Hubs involved, the channel type (e.g., Video (a.k.a. BellSouth SPA Video), Voice Grade (a.k.a. BellSouth SPA DSO VG), High Capacity (a.k.a. BellSouth High Capacity), etc.), the channel interface, technical specification package and options desired. When ordering Voice Grade (a.k.a. BellSouth SPA DSO VG) local channels and associated voice grade (a.k.a. BellSouth SPA DSO VG) interoffice channels, the customer must specify whether they are to be billed under the Voice Grade (a.k.a. BellSouth SPA DSO VG) Rate Stability Plan. For multipoint services the channel interface at each premises may, at the request of the customer, be different but all such interfaces shall be compatible. When establishing Special Access (a.k.a. BellSouth SPA) Service under the Shared Network Arrangement, the host subscriber must coordinate with each service user the design, testing and maintenance of the service. Additionally, the service user must provide to the BellSouth Telephone Companies the Connecting Facility Arrangement (CFA) and the High Capacity (a.k.a. BellSouth SPA High Capacity) Billing Account Number (HBAN) of the host subscriber. Information relative to BellSouth ADSL (N)
service is specified in 5.1.1(J). (N)

(D)
(D)
(D)
(D)
(D)
(D)
(D)

(D)
(D)
(D)
(D)

(M)

Certain material previously appearing on this page now appears on Original Page 5.2.0.1

****

ACCESS SERVICE

5 - Ordering Options for BellSouth SWA and Special Access (a.k.a. BellSouth SPA) Service (Cont'd)

5.2 Access Order (Cont'd)

5.2.7 Special Access (a.k.a. BellSouth SPA) and BellSouth SWA Transport Service (Cont'd)

(B) For BellSouth SWA Dedicated Transport Services, the customer must specify the Facility Hubs involved, if applicable, the channel type (e.g. BellSouth SWA Voice Grade, BellSouth SWA DS1, etc.), the channel interface and any options desired. When establishing BellSouth SWA Transport Services under the Shared Network Arrangement, the host subscriber must coordinate with each service user the design testing and maintenance of the service. Additionally, the service user must provide to BellSouth Telecommunications, Inc., the Connecting Facility Arrangement (CFA) and the Billing Account Number (BAN) of the host subscriber. (M)

(C) Where the Special Access (a.k.a. BellSouth SPA) or WATS Access Line (a.k.a. BellSouth SPA WATS Line) Service is exempt from the Special Access Surcharge as set forth in 7.4.2 following, the customer shall furnish with the order the certification as set forth in that section.

(D) For WATS Access Line (a.k.a. BellSouth SPA WATS Line) Service, the customer must also specify the type of calling (i.e., Originating Only, Terminating Only, or Two-Way) for which the service is to be provided. Additionally, when necessary screening functions are not provided at the wire center which serves the customer's originating or terminating premises, the Telephone Company will provide the service to the nearest wire center where the capability exists. In these circumstances, the customer will be notified and the order will be changed to designate the appropriate premises. No charge will apply for the change.

(E) To enable a customer to receive flat rate treatment on a WATS Access Line (a.k.a. BellSouth SPA WATS Line) used to provide terminating service (i.e., BellSouth SWA 8XX Toll Free Dialing Ten Digit Screening Service), the customer must specify, by jurisdiction, the telephone number which is used to route the call.

Certain material now appearing on this page previously appeared on 3rd Revised Page 5-9.

****

ACCESS SERVICE

5 - Ordering Options for BellSouth SWA and Special Access (a.k.a BellSouth SPA) Service (Cont'd)

5.2 Access Order (Cont'd)

5.2.8 BellSouth SWA Service to Cellular Interconnections

For BellSouth SWA FGB, BellSouth SWA FGD, BellSouth SWA TSBSA 1 and BellSouth SWA TSBSA 3 service to a Mobile Telephone Switching Office (MTSO) directly interconnected to a Telephone Company Access Tandem Office, the customer shall provide information to the Telephone Company indicating the NXX code(s) to be accessed. (T)

5.2.9 BellSouth SWA 900 (T)

For BellSouth SWA 900 service, the customer shall order in the same manner which is set forth preceding for ordering BellSouth SWA FGD and BellSouth SWA TSBSA 3 with the following exception. The customer must order BellSouth SWA FGD and BellSouth SWA TSBSA 3 to all access tandems or direct connections to all end offices designated by the Telephone Company as BellSouth SWA 900 service screening offices within the state. Direct trunk routes cannot be provided unless the end office is equipped to provide the customer identification function. All traffic originating from end offices not equipped to provide the customer identification function will require routing via the access tandem at which the function is available. Service must be ordered accordingly. In addition, the customer shall specify whether 900 NXX codes provided to the customer should be arranged for 1+ dialing only or for both 1+ and 0+ dialing. All 900 NXXs provided to an individual customer will be arranged for either 1+ dialing only or for both 1+ and 0+ dialing.

When the customer desires activation of a 900 NXX code for 900 NXX screening the customer shall submit an Access Service Request (ASR) whether or not additional capacity is required.

5.2.10 BellSouth Operator Transfer Service (T)

When ordering BellSouth Operator Transfer Service, the customer shall specify the number of new or additional BellSouth SWA FGC, BellSouth SWA FGD, BellSouth SWA TSBSA 2 or BellSouth SWA TSBSA 3 Trunks desired, if any, to carry originating traffic from the Operator Services System location to the customer location in each LATA served by the BellSouth Operator Services (T)1
System where the customer requests BellSouth Operator Transfer Service. (T)

****

5.2 Access Order (Cont'd)

5.2.11 BellSouth Electronic White Pages Access

When ordering BellSouth Electronic White Pages Access service, the customer shall obtain Public Packet Switching Network (PPSN) Service to interconnect with the Company's BellSouth Electronic White Pages Access location(s).

5.2.12 BellSouth Line Information Data Base Access

In addition to ordering conditions set forth in Section 5.1.1 preceding, the customer shall provide the Originating Point Code(s) associated with BellSouth Line Information Data Base Access Validation.

In addition to requirements stated in Section 19 following, for BellSouth Line Information Data Base Access service, the customer shall specify the number of additional BellSouth Line Information Data Base Access lines, if any, required to carry traffic from the customer's SPOI to the BellSouth Line Information Data Base Access location.

5.2.13 BellSouth Expanded Interconnection Service (T)

For BellSouth Expanded Interconnection service arrangements, the collocator must specify the number and type of cross connect elements to be utilized. (T)

5.2.14 Billing Name and Address (BNA)

In addition to the ordering conditions set forth in Section 5.1.1 preceding, the customer shall also provide the following:

(1) The customer's Carrier Identification code (CIC) or pseudo CIC Code and Access Carrier Name Abbreviation (ACNA). In the event the customer does not have such an assignment the customer must contact BellSouth for this assignment;

(2) A list of Carrier Identification Codes (CICs) or pseudo CIC Codes and Access Carrier Name Abbreviations (ACNAs) for whom billing services are being performed;

(3) The established BellSouth Carrier Access Billing System (CABS) Account (C07) account number and if no account exists BellSouth will establish a C07 account for billing purposes.

5.2.15 BellSouth Inward Operator Services

For BellSouth Inward Operator Services, the customer shall specify the number of new or additional BellSouth SWA FGC, BellSouth SWA FGD or BellSouth SWA TSBSA 2 or BellSouth SWA TSBSA 3 trunks desired, if any, to carry traffic from the customer's premises to the BellSouth Inward Operator Services location.

All BellSouth marks contained herein and as set forth in the trademarks and servicemarks section of this Tariff are owned by BellSouth Intellectual Property Corporation.
****

5.2.15 Mechanized Interface to Specified Operation Support Systems

For any customer of BellSouth SWA and Special Access (a.k.a. BellSouth SPA) Service, other than BellSouth ADSL Service and BellSouth Session Based DSL (C)
Service, additional features are offered. The features include a mechanized (C)
interface to the trouble reporting system as indicated in (A) following, a mechanized interface to the Preferred Interexchange Carrier (PIC); Street Guide Validation, and verification of Connecting Facility Assignments (CFA) and Network Channel/Interface Codes (NC/NCI). The Telephone Company will provide BellSouth ADSL Service and BellSouth Session Based DSL Service (C)
customers electronic input and response format information.

(A) The feature, Trouble Administration for Access Services, allows the customer to electronically perform the following:

- Enter a Trouble Report
- Request Trouble Report status
- Add Trouble Report information
- Modify Trouble Report attributes
- Verify repair completion
- Cancel Trouble Report
- Trouble Report attribute value change

(B) The feature, PIC Inquiry and Order, provides the BellSouth SWA Access Customers (BellSouth SWA FGD only) the ability to perform the following:

- Telephone PIC inquiry
- Telephone PIC change

This feature is only for access to the system. All other appropriate PIC charges as set forth in 13.3.3 following apply.

(C) The feature, Street Guide Validation, provides the customer with the ability to electronically verify an end user street address for the purpose of submitting an accurate access service request (ASR).

This feature is available to the customer in conjunction with the submission of an ASR for the sole purpose of validating the street address of an end user. Any other use of this service is prohibited.

(D) The features, Connecting Facility Assignment (CFA) and Network Channel/Interface Codes (NC/NCI) are provided for the sole purpose of enabling the customer to electronically verify connecting facility assignment(s) and network channel/interface code(s) prior to submitting an access service request (ASR).

(E) To implement these features, the customer must provide a terminal a modem and Switched Dial Service or a Private Line Service to a location designated by the Company at which the Company provides access to these features. If the customer chooses to utilize a dial service to access these features, a Security Card is required. The ordering conditions for the Security Card are set forth in 13.3.12 following.

All BellSouth marks contained herein and as set forth in the trademarks and servicemarks section of this Tariff are owned by BellSouth Intellectual Property Corporation.
****

ACCESS SERVICE

5 - Ordering Options for BellSouth SWA and Special Access (a.k.a. BellSouth SPA) Service (Cont'd)

5.2.16 BellSouth SWA 500 Access Service

For BellSouth SWA 500 Access service, as described in 6.2.9 following, the customer shall order in the same manner which is set forth preceding for ordering BellSouth SWA FGC, BellSouth SWA FGD, BellSouth SWA TSBSA 2 and BellSouth SWA TSBSA 3 except that customers must order BellSouth SWA FGC, BellSouth SWA FGD, BellSouth TSBSA SWA 2 and BellSouth SWA TSBSA 3 to all end offices within the customer designated LATA(s).

The customer is also responsible for reporting to the Telephone Company the percent interstate usage (PIU) for BellSouth SWA 500 service as set forth in 2.3.10 preceding.

5.2.17 BellSouth Local Number Portability Database Services

For BellSouth Local Number Portability (LNP) Query Service, in addition to subscribing to the service by meeting the conditions set forth in Section 5.1.1 preceding, the customer shall provide the Originating Point Codes associated with the service.

5.2.18 BellSouth Remote Access Service

(A) For BellSouth Remote Access Service, in addition to subscribing to the service by meeting the conditions set forth in Sections 5.1.1 and 5.2.2 preceding, the customer shall:

(1) coordinate their ASR through a customer account team;
(2) populate the project field on the ASR with "BST-RAS"; and
(3) negotiate service intervals for BellSouth Remote Access Service.

5.2.19 BellSouth IPTG Terminating Service (N)

(A) For BellSouth IPTG Terminating service, as described in 6.2.14 following, the customer shall: (N) (N)

(1) coordinate their ASR through a customer account team; (N)
(2) populate fields on the ASR with information provided by the account team (N) (N)

The customer is also responsible for reporting to the Telephone Company the percent interstate usage (PIU) for BellSouth IPTG Terminating service as set forth in 2.3.10 preceding. (N) (N) (N)

(M)

Certain material previously appearing on this page now appears on Original Page 5-11.1.1.

****

ACCESS SERVICE

5 - Ordering Options for BellSouth SWA and Special Access (a.k.a. BellSouth SPA) Service (Cont'd)

5.3 Access Order Modifications

(A) The customer may request a modification of its Access Order at any time prior to notification by the Telephone Company that service is earlier. The Telephone Company will make every effort to accommodate requested modification when it is able to do so with the normal work force assigned to complete such an order within normal business hours. If the modification cannot be made with the normal work force during normal business hours, overtime installation charges as stated in Section 13.2.6 may be applicable. All charges for Access Order modifications will apply on a per occurrence basis.

(B) Any increase in the number of BellSouth SWA and Special Access (a.k.a. BellSouth SPA) service channels, Intra-Office Collocation Cross Connect Service, Physical Access Cross Connect Service, Virtual Access Cross Connect Service, or BellSouth SWA service lines, trunks, or CCS7 Signaling Connections and CCS7 Signaling Terminations will be treated as a new Access Order (for the increased amount only). (C) (C) (C)

(C) If order modifications are necessary to satisfy the transmission performance for a Special Access (a.k.a. BellSouth SPA) Service order by a customer, these changes will be made without order modification charges being incurred by the customer.

All BellSouth marks contained herein and as set forth in the trademarks and servicemarks section of this Tariff are owned by BellSouth Intellectual Property Corporation.
****

5.3 Access Order Modifications (Cont'd)

(C) (Cont'd)

(1) Service Date Change Charge

(a) Access Order service dates for installation of new services or rearrangements of existing services may be changed, but the new service date may not exceed the original service date by more than 30 calendar days.

(b) When, for any reason, the customer indicates that service cannot be accepted for a period not to exceed 30 calendar days, and the Telephone Company accordingly delays the start of service, a Service Date Change Charge will apply. If the customer requested service date is more than 30 calendar days after the original service date, the order will be cancelled by the Telephone Company and reissued with appropriate cancellation charges applied unless the customer indicates that billing for the service is to commence as set forth in 5.4(A) following.

(c) Failure to notify the Company prior to the original service date to request a different service date may result in the application of a Service Date Change-Additional Dispatch Charge for installations, moves and rearrangement of services. If a Company technician is dispatched to the Customer's premises on the scheduled service date and the customer has failed to notify the Company before three o'clock p.m. EST on the business day prior to the scheduled service date that it wishes to change the service date, the Company will delay the start of service pending negotiations with the customer.

- If the customer reschedules the service date, a Service Date Change-Additional Dispatch Charge will apply in addition to a Service Date Change Charge as specified in (1)(e), following. When the rescheduled service date has a service interval of three business days or less, Service Date Advancement charges, as set forth in 5.1.1(H)(8), preceding, will apply in addition to the Service Date Change-Additional Dispatch charge and the Service Date Change charge in (1)(e) following. (S) (y) (S) (y) (S) (y) (S) (y) (S) (y) (S) (y)

- If the customer cancels the service date, cancellation charges will apply in accordance with terms and conditions for cancellation charges as set forth in 5.4 following. Cancellation of the order will not preclude the application of the Service Date Change Charge and Service Date Change-Additional Dispatch Charge assessed for prior occurrences on the same order. In addition, the Service Date Advancement-Missed Appointment Charge set forth in 5.1.1(H)(9) may apply on orders with advanced service dates. (S) (y) (S) (y) (S) (y) (S) (y)

- Section 5.1.1(H)(6), preceding, provides a description of the Company resources associated with the Service Date Change and Service Date Change-Additional Dispatch Charge. (N) (x) (N) (x) (N) (x)

(x) Issued to become effective on May 10, 2003 under authority of Special Permission NO. 03-051
(y) Material Filed under Transmittal No 716 is scheduled to become effective on May 10, 2003

****

5.3 Access Order Modifications (Cont'd)

(C) (Cont'd)

(1) Service Date Change Charge (Cont'd)

(d) A new service date may be established that is prior to the original service date if the Telephone Company determines it can accommodate the customer's request without delaying service dates for orders of other customers.

(e) A Service Date Change Charge will apply, on a per order per occurrence basis, for each service date changed. The Service Date Change-Additional Dispatch Charge will apply for each occurrence of a technician dispatch to the customer's premises when the customer is not ready for service as specified in (1)(c), preceding. The applicable charges are:

Service Date Change Charge	USOC	Charge
Per Order, per Occurrence	OMC	$31.60

Service Date Change-Additional Dispatch Charge	USOC	Charge
Per Occurrence	OMCAD	$150.00

(f) For multiple orders with the same service date for the same customer premises, only one Service Date Change-Additional Dispatch charge will apply. However, a Service Date Change charge will apply for each order.

(g) Service Installation Guarantees, as set forth in 2.4.9 preceding, are not applicable for Service Date Change Charges.

(2) Partial Cancellation Charge

Any decrease in the number of ordered BellSouth SWA and Special Access (a.k.a. BellSouth SPA) service channels, Intra-Office (C)
Collocation Cross Connect Service, Physical Access Cross Connect (C)
Service, Virtual Access Cross Connect Service, or BellSouth SWA or (C)
CCS7 Signaling Connections services will be treated as a partial cancellation and the charges as set forth in 5.4(B) following will apply.

All BellSouth marks contained herein and as set forth in the trademarks and servicemarks section of this Tariff are owned by BellSouth Intellectual Property Corporation.
****

ACCESS SERVICE

5 - Ordering Options for BellSouth SWA and Special Access (a.k.a. BellSouth SPA) Service (Cont'd)

5.3 Access Order Modifications (Cont'd)

(C) (Cont'd)

(3) Design Change Charge

Except for BellSouth ADSL service, the customer may request a design change to the service ordered. A design change is any change to an Access Order which requires engineering review. An engineering review is a review by Telephone Company personnel of the service ordered and the requested changes to determine what changes in the design, if any, are necessary to meet the changes requested by the customer. Design changes include such things as the addition or deletion of optional features or functions or a change in the type of BellSouth SWA Transport Termination, type of channel interface, type of Interface Group or technical specification package. Design changes do not include a change of customer premises, end user premises, end office switch, Basic Serving Arrangement, Intra-Office (C)
Collocation Cross Connect Service, Physical Access Cross Connect (C)
Service, Virtual Access Cross Connect Service, or BellSouth SWA and (C)
Special Access (a.k.a. BellSouth SPA) service channel type. Changes of this nature will require the issuance of a new order and the cancellation of the original order with appropriate cancellation charges applied. BellSouth ADSL service Virtual Circuits are non-designed and the customer may not request a design change.

Should a customer requested Design change be received on a pending access order that results in the establishment of a new service date that exceeds the original service date by more than 30 days, the customer shall not be required to cancel and reissue a new order, but shall be billed a design change charge and a service date change charge.

The Telephone Company will review the requested change, notify the customer whether the change is a design change, if it can be accommodated and if a new service date is required. If the customer authorizes the Telephone Company to proceed with the design change, a Design Change Charge will apply. The Design Change Charge will apply on a per order per occurrence basis, for each order requiring a design change. The applicable charge is:

Design Change Charge	USOC	Rate Per Order
ALL STATES	H28	$39.93

If a change of service date is required, the Service Date Change Charge as set forth in (1) preceding will also apply.

Service Installation Guarantees, as set forth in 2.4.9 preceding, are not applicable for Design Change Charges.

All BellSouth marks contained herein and as set forth in the trademarks and servicemarks section of this Tariff are owned by BellSouth Intellectual Property Corporation.
****

ACCESS SERVICE

5 - Ordering Options for BellSouth SWA and Special Access (a.k.a. BellSouth SPA) Service (Cont'd) (T) (T)

(D)
(D)

****

ACCESS SERVICE

5 - Ordering Options for BellSouth SWA and Special Access (a.k.a. BellSouth SPA) Service (Cont'd)

5.4 Cancellation of an Access Order

(A) A customer may cancel an Access Order for the installation of service at any time prior to notification by the Telephone Company that service is available for the customer's use. The cancellation date is the date the Telephone Company receives written or verbal notice from the customer that the order is to be canceled. The verbal notice must be followed by written confirmation within 10 days. If the customer or a customer's end user is unable to accept Access Service within 30 calendar days after the original service date, the customer has the choice of the following options:

- The Access Order shall be canceled and charges/provisions specified in (B) through (D) following will apply, or

- Billing for the service will commence.

In any event, the cancellation date or the date billing is to commence (depending on which option is selected by the customer) shall be the 31st day beyond the original service date of the Access Order.

(B) When a customer cancels an Access Order for the installation of service, a Cancellation Charge will apply as follows:

(1) Costs incurred in conjunction with the provision of BellSouth SWA service, Virtual Access Cross Connect Service, Physical Access Cross (C)
Connect Service, Intra-Office Collocation Cross Connect Service, or (C)
Special Access (a.k.a. BellSouth SPA) Service starts on the Application Date as defined in (4)(b) following. Provisions addressing the application of charges for other BellSouth Expanded Interconnection elements are contained in Section 20 of this Tariff.

All BellSouth marks contained herein and as set forth in the trademarks and servicemarks section of this Tariff are owned by BellSouth Intellectual Property Corporation.
****

ACCESS SERVICE

5 - Ordering Options for BellSouth SWA and Special Access (a.k.a. BellSouth SPA) Service (Cont'd) (T) (T)

5.4 Cancellation of an Access Order (Cont'd)

(B) (Cont'd)

(2) When the customer cancels an Access Order prior to the Design Layout Report Date, as defined in (4)(b) following, no charges shall apply.

(3) When the customer cancels an Access Order on or after the Design Layout Report Date, a charge equal to the estimated costs incurred by the Telephone Company shall apply. Such charge is determined as specified in (4) following.

(4) Charges applicable as specified in (3) preceding are based on the estimated costs incurred by the Telephone Company at the time the order is cancelled. The estimated costs incurred are determined based on the following:

(a) Certain Telephone Company critical dates are associated with an Access Order provisioning interval, whether standard or negotiated. These dates are used by the Telephone Company to monitor the progress of the provisioning process. At any point in the Access Order interval the Telephone Company is able to determine which critical date was last completed and can thus determine what percentage of the Telephone Company's provisioning costs have been incurred as of that critical date.

(b) The critical dates tracked by the Telephone Company are as follows:

- Application Date (APP): The date the customer provides to the Telephone Company, (1) a firm commitment for service and (2) sufficient information as detailed in 5.1 preceding to enable the Telephone Company to begin service provisioning. This is also the order date.

- Scheduled Issue Date (SID): The date that the order is to enter the Telephone Company's order distribution system.

- Design Layout Report Date (DLRD): The date the Design Layout Report (DLR) is forwarded to the customer.

- Records Issue Date (RID): The date that all design and assignment information is to be sent to the central office and installation forces.

****

ACCESS SERVICE

5 - Ordering Options for BellSouth SWA and Special Access (a.k.a. BellSouth SPA) Service (Cont'd)

5.4 Cancellation of an Access Order (Cont'd)

(B) (Cont'd)

(4) (Cont'd)

(b) (Cont'd)

- Wired and Office Tested Date (WOT): The date by which all intraoffice wiring is to be completed, all plug-ins optioned, aligned, and frame continuity established, and the interoffice facilities, if applicable, tested. In addition, switching equipment, including translation loading, is to be installed and tested.

- Plant Test Date (PTD): The date on which overall testing of the service is to be started.

- Engineering Information Report Date (EIRD): The date the engineering group in another ISS area provides information to the primary engineering group.

- Service Date (DD): The date on which service is to be made available to the customer. This is sometimes referred to as the Due Date.

- Designed, Verified, and Assigned Date (DVA): The date by which field implementation groups must report that all documents and materials have been received.

- Frame Continuity Date (FCD): Date on which frame-to-frame testing must be completed. This is sometimes referred to as the Facility Continuity Check Date. (M) (M) (M)

- Loop Assignment and Make-up Date (LAM): The date by which Local Loop Assignment and Make-up information must be available. (M) (M)

- Confirming Design Layout Report Date (CDLRD): The date the Design Layout Report (DLR) is to be confirmed by the customer. (M) (M)

Certain material now appearing on this page previously appeared on 2nd Revised Page 5-18

All BellSouth marks contained herein and as set forth in the trademarks and servicemarks section of this Tariff are owned by BellSouth Intellectual Property Corporation.
****

ACCESS SERVICE

5 - Ordering Options for BellSouth SWA and Special Access (a.k.a. BellSouth SPA) Service (Cont'd)

5.4 Cancellation of an Access Order (Cont'd)

(B) (Cont'd)

(4) (Cont'd)

(c) The percentage of the total provisioning cost incurred by the Telephone Company at a particular critical date varies by the type of service as shown in (d) following.

(d) When a customer cancels an Access Order, or part of an Access Order, before the service date, the Telephone Company will apply cancellation charges to the order. Cancellation charges are calculated by multiplying all the nonrecurring charges associated with the order, or that part of the order being cancelled, by the percentage shown in (e) following for the critical date last completed on the order.*

(e) Cancellation Charge Percentages (M)

TYPE SERVICE/ CRITICAL DATES	AFTER: APP BEFORE: SID	SID LAM	LAM EIRD	EIRD DLRD	DLRD RID	RID DVA	DVA WOT	WOT FCD	FCD PTD	PTD DD	DD
SPECIAL ACCESS (a.k.a. BellSouth SPA)											
WATS 100.0 (a.k.a. BellSouth SPA WATS Line)	1.6	4.7	6.6	9.5	13.2	18.7	33.2	44.6	56.6	83.6	
VOICE GRADE 100.0 (a.k.a. BellSouth DSO VG)	1.6	4.7	6.6	9.5	13.2	18.7	33.2	44.6	56.6	83.6	
TELEGRAPH GRADE 100.0 (a.k.a. BellSouth SPA Telegraph)	1.6	4.8	8.9	13.6	17.0	22.2	34.7	43.9	56.9	84.6	
METALLIC GRADE 100.0 (a.k.a. BellSouth SPA Metallic)	1.6	4.9	6.9	9.8	13.5	18.2	30.3	39.7	53.6	83.3	

* As set forth in 5.4(B)(2), when a customer cancels an order prior to the Design Layout Report Date, no cancellation charges shall apply.

Certain material now appearing on this page previously appeared on 7th Revised Page 5-19.

All BellSouth marks contained herein and as set forth in the trademarks and servicemarks section of this Tariff are owned by BellSouth Intellectual Property Corporation.
****

ACCESS SERVICE

Ordering Options for BellSouth SWA and Special Access (a.k.a. BellSouth SPA) Service (Cont'd)

5.4 Cancellation of an Access Order (Cont'd)

(B) (Cont'd)

(4) (Cont'd)

(e) Cancellation Charge Percentages

SPECIAL ACCESS (a.k.a. BellSouth SPA)												
PROGRAM AUDIO (a.k.a. BellSouth Program Audio)	1.4	4.1	5.8	8.3	11.5	16.2	28.0	37.1	49.5	80.5	100.0	
HICAP (a.k.a BellSouth SPA High Capacity)	12.9	29.2	33.1	35.5	37.5	42.9	55.7	66.2	69.9	86.2	100.0	(T)
DIGITAL DATA ACCESS (a.k.a. BellSouth SPA DSO Digital Data)	1.5	4.6	6.1	9.2	13.5	18.6	28.5	35.4	46.2	78.2	100.0	
Intra-Office Collocation Cross Connect Service	12.9	29.2	33.1	35.5	37.5	42.9	55.7	66.2	69.9	86.2	100.0	(N) (N) (N)
Physical Access Cross Connect Service	12.9	29.2	33.1	35.5	37.5	42.9	55.7	66.2	69.9	86.2	100.0	(N) (N) (N)
Virtual Access Cross Connect Service	12.9	29.2	33.1	35.5	37.5	42.9	55.7	66.2	69.9	86.2	100.0	(T) (T) (T)

Certain material previously appearing on this page now appears on 1st Revised Page 5-18.

All BellSouth marks contained herein and as set forth in the trademarks and servicemarks section of this Tariff are owned by BellSouth Intellectual Property Corporation.
****

ACCESS SERVICE

5 - Ordering Options for BellSouth SWA and Special Access (a.k.a. BellSouth SPA) Service (Cont'd)

5.4 Cancellation of an Access Order (Cont'd)

(B) (Cont'd)

(4) (Cont'd)

(e) Cancellation Charge Percentages (Cont'd)

TYPE SERVICE/ CRITICAL DATES AFTER: / BEFORE:	APP / SID	SID / LAM	LAM / EIRD	EIRD / DLRD	DLRD / RID	RID / DVA	DVA / WOT	WOT / FCD	FCD / PTD	PTD / DD	DD / __	
BellSouth SWA												
TRUNKS OR LINES	7.0	18.9	23.7	24.9	26.3	35.6	51.4	58.3	69.4	90.3	100.0	
HICAP (a.k.a. BellSouth High Capacity) FACILITIES	12.9	29.2	33.1	35.5	37.5	42.9	55.7	66.2	69.9	86.2	100.0	
Virtual Access Cross Connect Service	12.9	29.2	33.1	35.5	37.5	42.9	55.7	66.2	69.9	86.2	100.0	(T) (T) (T)

All BellSouth marks contained herein and as set forth in the trademarks and servicemarks section of this Tariff are owned by BellSouth Intellectual Property Corporation.
****

ACCESS SERVICE

5 - Ordering Options for BellSouth SWA and Special Access (a.k.a. BellSouth SPA Service (Cont'd)

5.4 Cancellation of an Access Order (Cont'd)

(B) (Cont'd)

(4) (Cont'd)

(e) Cancellation Charge Percentages (Cont'd)

TYPE SERVICE/ CRITICAL DATES AFTER:	APP	SID	LAM	EIRD	DLRD	RID	DVA	WOT	FCD	PTD	DD	
BEFORE:	SID	LAM	EIRD	DLRD	RID	DVA	WOT	FCD	PTD	DD		
MANAGED SHARED FRAME RELAY SERVICE	10.73	18.98	24.44	29.91	35.71	36.53	48.17	62.44	81.19	98.42	100	
MANAGED SHARED ATM SERVICE	15.04	21.89	26.53	30.77	35.26	35.91	45.26	56.76	78.36	98.71	100	
BELLSOUTH WAVELENGTH SERVICE	12.9	29.2	33.1	35.5	37.5	42.9	55.7	66.2	69.9	86.2	100	(N) (N) (N)

****

5.4 Cancellation of an Access Order (Cont'd)

(C) When a customer cancels an order service for BellSouth Wavelength service, LightGate service (a.k.a. BellSouth SPA Point to Point Network) system, BellSouth Dedicated Ring or SMARTRing service (a.k.a. BellSouth SPA Dedicated Ring) prior to the beginning of the selected service period, the customer will be liable for all capital expenses incurred by the Telephone Company in provisioning the BellSouth Wavelength service, LightGate service (a.k.a. BellSouth SPA Point to Point Network), BellSouth Dedicated Ring or SMARTRing service (a.k.a. BellSouth SPA Dedicated Ring), as of the date the order is canceled by the customer. The charges billed to the customer will not exceed an amount equal to the minimum period for the service as set forth in Sections 6.7.2, 7.4.4 (T)
and 29.1.4 of this Tariff at the month-to-month rates set forth in (T)
6.8.1, 7.5.9, 7.5.14 and 29.1.9 of this Tariff. Such charges will be (T)
billed in addition to and subsequent to the cancellation charges set forth in 5.4 (B) preceding.

(D) When a customer cancels an order for a single BellSouth ADSL service VC, or multiple VCs included in a MVC arrangement, prior to the Service Due Date, no charges apply. Except as specified in 7.4.29(G), cancellation of an order for the installation of a BellSouth ADSL service VC on or after the DD will require payment of a Termination Liability Charge and all nonrecurring charges appropriate for installation of BellSouth ADSL service VCs.

When a customer cancels an order for BellSouth ADSL service, End-User Aggregation, Destinations or Sessions, prior to the service date, no charges apply. Cancellation of an order for BellSouth ADSL service, End-User Aggregation, Destinations or Sessions on or after the DD will require payment of a charge equal to all nonrecurring charges appropriate for installation of a new BellSouth ADSL service, End-User Aggregation, Destinations or Sessions.

(E) When a customer makes a firm order commitment to establish an Aggregation Location for SMARTGate service (a.k.a. BellSouth Managed Shared Ring Network) or BellSouth Managed Shared Ring service and subsequently cancels the commitment to establish the Aggregation Location prior to the beginning of the location's service date, the customer will be liable for all capital expenses incurred by the Telephone Company in establishing the location, as of the date the commitment is canceled by the customer.

(F) When a customer cancels an order for the discontinuance of service, no charges apply for the cancellation.

(G) If the Telephone Company misses a service date by more than 30 days due to circumstances over which it has direct control (excluding, e.g., acts of God, governmental requirements, work stoppages and civil commotion), the customer may cancel the Access Order without incurring cancellation charges.

All BellSouth marks contained herein and as set forth in the trademarks and servicemarks section of this Tariff are owned by BellSouth Intellectual Property Corporation.
****

ACCESS SERVICE (N)

5 – Ordering Options for BellSouth SWA and Special Access (a.k.a. BellSouth SPA) Service (Cont'd) (N) (N)

5.5 Selection of Facilities for Access Orders (M)

(A) When a customer places an Access Order, it may choose to utilize facilities it previously purchased. If the customer has a high capacity interface, or has purchased a facility, the customer must request that specific channels be used to implement the Access Order. If a facility assignment is not provided by the customer, the Telephone Company will provide the service from available inventory as discussed in 5.8 following. (M) (M) (M) (M) (M) (M) (M)

(B) For all other Access Orders, the option to request a specific transmission path or channel is not provided except as provided for under Special Facilities Routing as set forth in 11. following. (M) (M) (M)

Material now appearing on this page previously appeared on 8th Revised Page 5-20.

****

ACCESS SERVICE

5 - Ordering Options for BellSouth SWA and Special Access (a.k.a. BellSouth SPA) Service (Cont'd)

5.6 Minimum Period

(A) Except as set forth in (B), (C) following and Sections 6.7.20, 6.7.21, 6.7.22, 7.4.27, 9.1.4(A), 13.3.5(C)(1)(b), (c) and (d), and 29.1.4 of this Tariff, the minimum period for which charges are applicable for Access Service is one month. (T) (T) (T)

(B) The minimum period for part-time Broadcast Quality Video (a.k.a. BellSouth SPA Broadcast Quality Video), DS3 Digital Video (a.k.a. BellSouth SPA DS3 Digital Video) and Program Audio (a.k.a. BellSouth SPA Program Audio) Special Access (a.k.a. BellSouth SPA) services is one day even though the service will be provided only for the duration of the event specified on the order (e.g., one-half hour, two hours, five hours, etc.).

(C) The minimum period for BellSouth Remote Access Service is twelve months.

(D) Service Rearrangements as set forth in Sections 6.7.1(D)(3), 7.4.1(C)(3) and 29.1.7(B)(1) and Transfer of Service as set forth in Sections 6.7.1(D)(4), 7.4.1(C)(4) and 29.1.7(B)(2) of this Tariff for BellSouth SWA, Special Access (a.k.a. BellSouth SPA) services and Optical Transport Access services respectively, may be made without a change in minimum period requirements.

(E) Changes, other than those identified in Sections 6.7.1(D)(3) and (4) and 7.4.1 (C)(3) and (4) and 29.1.7(B)(1) and (2) of this Tariff, will be treated as a discontinuance of the existing service and an installation of a new service. All associated nonrecurring charges will apply for the new service. A new minimum period will be established for the new service. The customer will also remain responsible for all outstanding minimum period obligations associated with the disconnected service.

The changes listed below are those that will be treated as a discontinuance and installation of service and for which a new minimum period will be established.

(1) A move to a different building as set forth in Sections 6.7.7, 7.4.5 or 29.1.7 of this Tariff.

(2) A change in type of service (i.e., BellSouth SWA to Special Access (a.k.a. BellSouth SPA), one type of Special Access (a.k.a. BellSouth SPA) service to another, or one type of BellSouth SWA Access service to another except as set forth in Section 6.7.6 of this Tariff).

(3) A change in the type of BellSouth SWA Local Channel, Special Access (a.k.a. BellSouth SPA) Service Local Channel or Optical Transport Access Service Wavelength Channel.

All BellSouth marks contained herein and as set forth in the trademarks and servicemarks section of this Tariff are owned by BellSouth Intellectual Property Corporation.
****

ACCESS SERVICE

5 - Ordering Options for BellSouth SWA and Special Access (a.k.a. BellSouth SPA) Service (Cont'd)

5.6 Minimum Period (Cont'd)

(E) (Cont'd) (T)

(4) A change in the interface for BellSouth SWA Service, BellSouth Directory Assistance Access Service or BellSouth Line Information Data Base Access service.

(5) Change in BellSouth SWA Service traffic type.

(F) A customer may request disconnect of an access service at any time after the service has been established. The customer must give the Telephone Company at least one business day written or verbal notice prior to the desired disconnect date. The one business day notice period will begin on the date the Telephone Company first receives the disconnect notification, either written or verbal. The verbal notice must be followed by written confirmation within 10 days. (T)

****

ACCESS SERVICE

5 - Ordering Options for BellSouth SWA and Special Access (a.k.a. BellSouth SPA) Service (Cont'd)

5.6 Minimum Period (Cont'd)

(F) Cont'd)

When Access Service is disconnected prior to the expiration of the minimum period, the customer is obligated for payment of the minimum period charge as set forth in 5.6.1 following. When Access Service is disconnected after the expiration of the minimum period, billing for the service will be performed in accordance with the provisions set forth in 2.4.1(C) preceding.

5.6.1 Minimum Period Charges

(A) When Access Service is disconnected prior to the expiration of the minimum period, charges are applicable for the balance of the minimum period. The disconnect date is the final date the customer has use of the service.

(B) The Minimum Period Charge for service provided with a one month minimum period will be determined as follows:

(1) For BellSouth SWA usage sensitive rate elements (i.e. Carrier Common Line, Local Switching, Access Tandem Switching, BellSouth SWA Common Transport, Interconnection, and BellSouth IPTG Terminating service) the charge for a month or fraction thereof is equal to the applicable rates for the actual or assumed usage for the month or such fraction thereof.

(2) For BellSouth SWA Transport components which are not usage sensitive (i.e., BellSouth SWA Local Channel and BellSouth SWA Dedicated Interoffice Channel and Channelization Equipment), the charge for a month or fraction thereof is the applicable monthly rates for the service as set forth in 6.8 following.

(3) For Special Access (a.k.a. BellSouth SPA) and BellSouth Expanded Interconnection Services, the charge for a month or fraction thereof is the applicable monthly rates for the service as set forth, respectively, in Section 7.5 and Section 20.4 of this Tariff. (T) (T) (T)

****

ACCESS SERVICE

5 - Ordering Options for BellSouth SWA and Special Access (a.k.a. BellSouth SPA) Service (Cont'd)

5.6 Minimum Period (Cont'd)

5.6.1 Minimum Period Charges (Cont'd)

(C) The Minimum Period Charges for BellSouth SWA FGD or BellSouth TSBSA 3 BellSouth SWA service will be as set forth in 2.4.2 preceding.

(D) The Minimum Period Charge for part-time Broadcast Quality Video (a.k.a. BellSouth SPA Broadcast Quality Video), DS3 Digital Video (a.k.a. (T)
BellSouth SPA DS3 Digital Video), and Program Audio (a.k.a. BellSouth (T)
SPA Program Audio) is the applicable daily rate for the service asset forth in 7.5 following.

(E) All applicable nonrecurring charges for the service will be billed in addition to the Minimum Period Charge.

****

5.6.1 Minimum Period Charges

(F) Should billing for a service which is disconnected prior to the expiration of the Minimum Period cover multiple billing cycles, the bill reflecting the disconnect of service will be adjusted to account for that portion of the Minimum Period Charge previously billed to the customer. In no event shall the total recurring charge billed to the customer for such service exceed the applicable Minimum Period Charge.

All applicable nonrecurring charges associated with the provision of service will be billed in addition to the Minimum Period Charge. Such nonrecurring charges include the nonrecurring charge for the installation of service and/or optional features, Service Order Modification Charges, Additional Engineering and Labor Charges, if any, etc.

5.7 Shared Use Facilities

Shared use occurs when BellSouth SWA, Special (a.k.a. BellSouth SPA) and BellSouth Expanded Interconnection services are provided over the same high capacity (a.k.a. BellSouth SPA High Capacity) facility through a common interface. The facility may be ordered either as BellSouth SWA, Special Access (a.k.a. BellSouth SPA) or Virtual Access Cross Connect, Physical Access (C)
Cross Connect, or Intra-Office Collocation Cross Connect Service. (C)

Billing will commence for the high capacity (a.k.a. BellSouth SPA High Capacity) facility as soon as the facility is turned over to the customer for use (i.e., on the service date). Such billing will include charges for the Virtual Access Cross Connect Service, Physical Access Cross Connect Service, (C)
Intra-Office Collocation Cross Connect Service, Special (a.k.a. BellSouth SPA) (C)
Local Channel or BellSouth SWA Local Channel, the Channelization Equipment (i.e., the multiplexer) and the interoffice transport, if any. Nonrecurring installation charges will also apply at this time.

All BellSouth marks contained herein and as set forth in the trademarks and servicemarks section of this Tariff are owned by BellSouth Intellectual Property Corporation.
****

ACCESS SERVICE

5 - Ordering Options for BellSouth SWA and Special Access (a.k.a. BellSouth SPA) Service (Cont'd) (T) (T)

5.7 Shared Use Facilities (Cont'd)

Such billing will continue until such time as the customer requests, by placing an order for service, that one or more of the derived channels be used in the provisioning of an end to end BellSouth SWA or Special Access (a.k.a. BellSouth SPA) service. When the end to end service is turned over to the customer for use, billing for the end to end service will commence. (T) (T)

When the original facility is ordered as Special Access (a.k.a. BellSouth SPA), the billing change to the existing facility, if any, will depend on whether the end to end service provisioned over the derived channel(s) is Special (a.k.a. BellSouth SPA). If Special Access (a.k.a. BellSouth SPA) service, the billing for the facility will not change but additional billing will commence for the end to end service provisioned over the facility. This billing will include an additional local channel(s) and interoffice mileage, if applicable, of a lower capacity level (e.g., voice grade). (T) (T) (T)

When the original facility is ordered as Special Access (a.k.a. BellSouth SPA), service is provisioned over a derived channel(s), the Special Access (a.k.a. BellSouth SPA) billing for the original facility will be reduced in direct proportion to the number of channels being utilized for BellSouth SWA service. For example, if six channels of a DS1 are to be used for BellSouth SWA, the Special Access (a.k.a. BellSouth SPA) rate will be reduced by one fourth. The customer will be billed one fourth of the BellSouth SWA DS1 rate, plus all other applicable BellSouth SWA charges for the BellSouth SWA service provided. (T) (T) (T) (T)1 (T) (T) (T) (T)

When the original facility is ordered as BellSouth SWA, the billing charge to the existing facility, if any, will depend on whether the end to end service provisioned over the derived channel(s) is BellSouth SWA or Special Access (a.k.a. BellSouth SPA) service. If BellSouth SWA service, the billing for the facility will not change but additional billing will commence for the end to end service provisioned over the facility. This billing will include local switching, information surcharge, carrier common line and additional interoffice transport at a lower capacity, if applicable. (T) (T) (T)

****

5 - Ordering Options for BellSouth SWA and Special Access (a.k.a. BellSouth SPA) Service (Cont'd)

5.7 Shared Use Facilities (Cont'd)

When the original facility is ordered as BellSouth SWA and Special Access (a.k.a. BellSouth SPA) service is provisioned over a derived channel(s), the BellSouth SWA billing for the original facility will be reduced in direct proportion to the number of channels being utilized for Special Access (a.k.a. BellSouth SPA) service. For example, if six channels of a DS1 are to be used for Special Access (a.k.a. BellSouth SPA) , the BellSouth SWA rate will be reduced by one fourth. The customer will be billed three fourths of the BellSouth SWA DS1 rate, plus all other applicable charges. The customer will be billed one fourth of the Special Access DS1 (a.k.a. BellSouth SPA) rate, plus all other applicable charges for the Special Access (a.k.a. BellSouth SPA) service provided.

BellSouth Dedicated Ring service is only available for Shared Use with SMARTRing Service (a.k.a. BellSouth SPA Dedicated Ring) and vice versa and (C)
BellSouth Managed Shared Ring service is only available for Shared Use with (C)
SMARTGate Service (a.k.a. BellSouth SPA Managed Shared Ring Network) and vice (C)
versa. When these services are ordered for Shared Use arrangements, all ring (C)
level components must be ordered as either BellSouth SWA or Special Access (a.k.a. BellSouth SPA).

5.8 Available Inventory

Available inventory is limited and does not include facilities previously ordered. The Telephone Company will make every reasonable effort to maintain sufficient available inventory to provide Access Service in accordance with customer's requested service date intervals. To the extent that service can be provided, Access Orders will be satisfied from available inventory.

****